FEAL

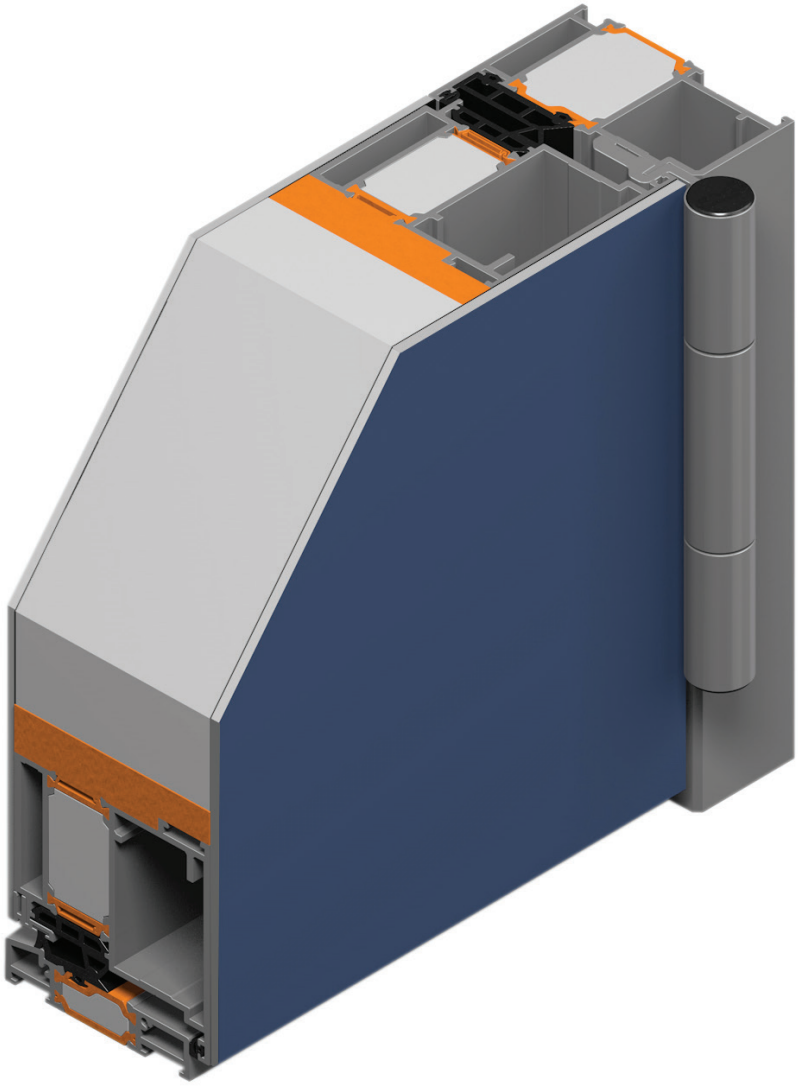

TERMO **85 VS** I **VP**

ULAZNA VRATA

ENTRY DOOR

Knjiga A / *Book A*

SADRŽAJ - CONTENT

TIPOLOGIJA IZRADE
TYPOLOGY OF PRODUCTION

Termo 85 VS (otvaranje unutra i vani)
Termo 85 VS (inward and outward opening)

-ispuna staklo
-izvedba sa pragom ili parapetnom prečkom u pragu
-infill: glass
-production with threshold or transom-bottom frame profile

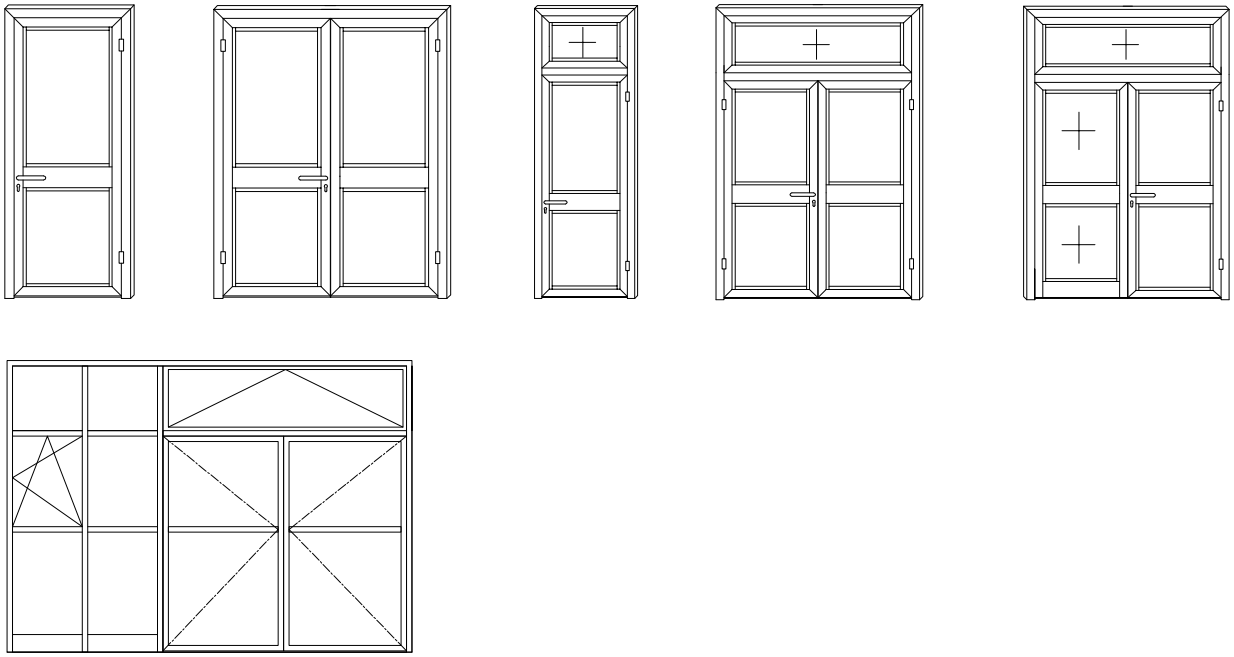

Termo 85 VP (otvaranje unutra)
Termo 85 VP (inward opening)

-ispuna panel; staklo
-mogućnost izvedbe sa obostrano ravnim limom
-infill:panel; glass
-the possibility of making both side hidden sash

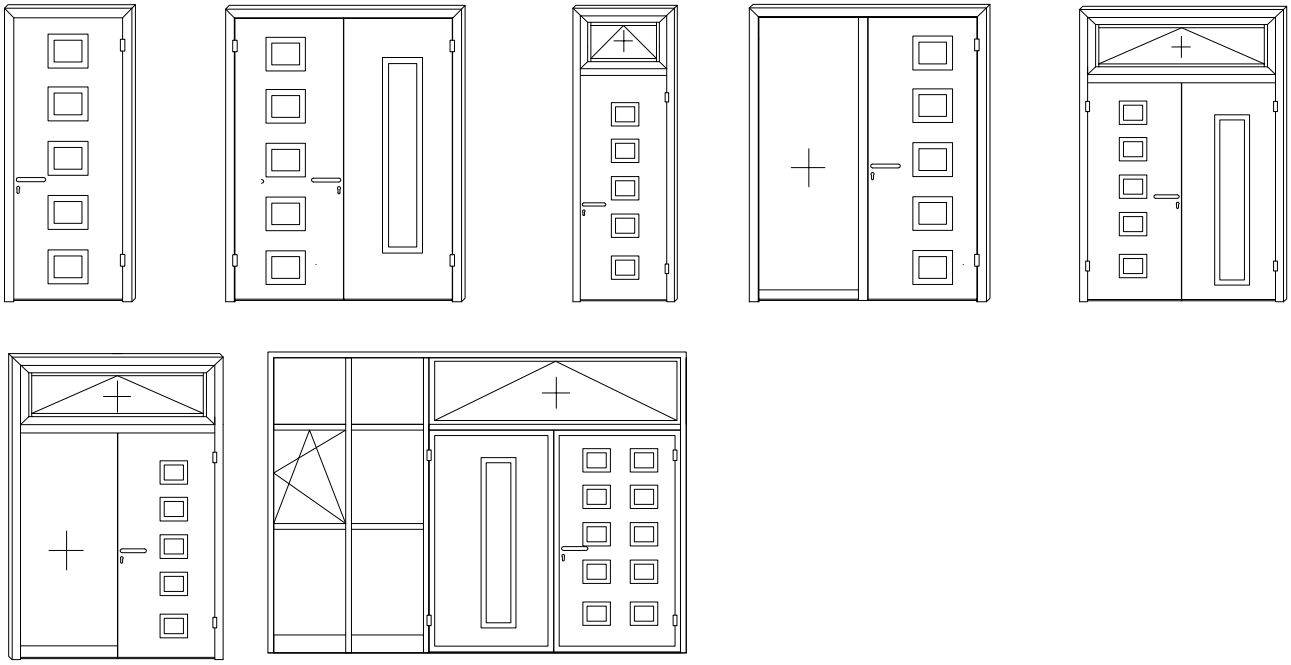

Značajke sistema
System characteristics

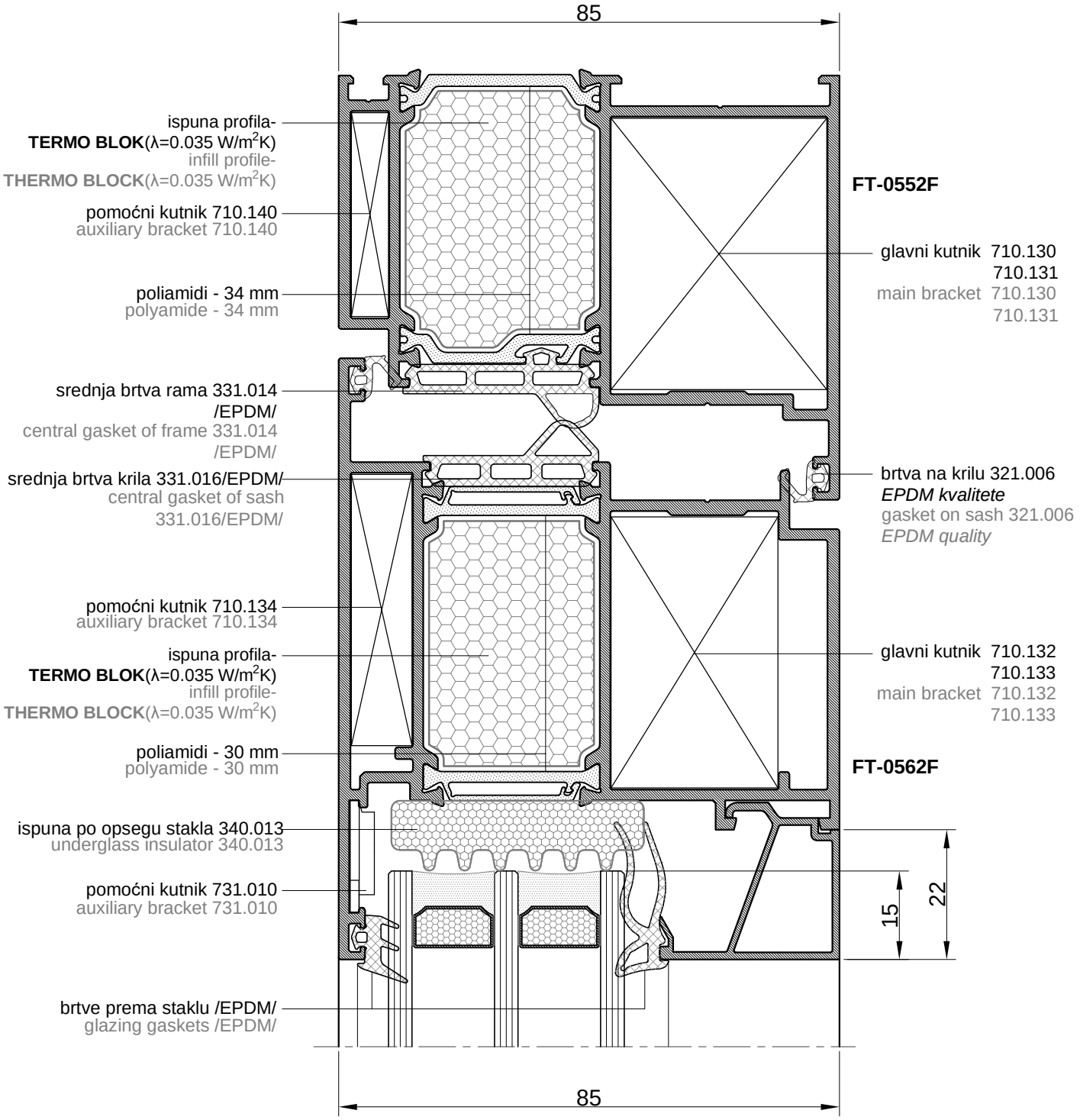
85
ispuna profila-
TERMO BLOK(λ=0.035 W/m2K)
infill profile-
THERMO BLOCK(λ=0.035 W/m2K)
pomoćni kutnik 710.140
auxiliary bracket 710.140
poliamidi - 34 mm
polyamide - 34 mm
srednja brtva rama 331.014
/EPDM/
central gasket of frame 331.014
/EPDM/
srednja brtva krila 331.016/EPDM/
central gasket of sash
331.016/EPDM/
pomoćni kutnik 710.134
auxiliary bracket 710.134
ispuna profila-
TERMO BLOK(λ=0.035 W/m2K)
infill profile-
THERMO BLOCK(λ=0.035 W/m2K)
poliamidi - 30 mm
polyamide - 30 mm
ispuna po opsegu stakla 340.013
underglass insulator 340.013
pomoćni kutnik 731.010
auxiliary bracket 731.010
brtve prema staklu /EPDM/
glazing gaskets /EPDM/
FT-0552F
glavni kutnik 710.130
710.131
main bracket 710.130
710.131
brtva na krilu 321.006
EPDM kvalitete
gasket on sash 321.006
EPDM quality
glavni kutnik 710.132
710.133
main bracket 710.132
710.133
FT-0562F
15
22
85

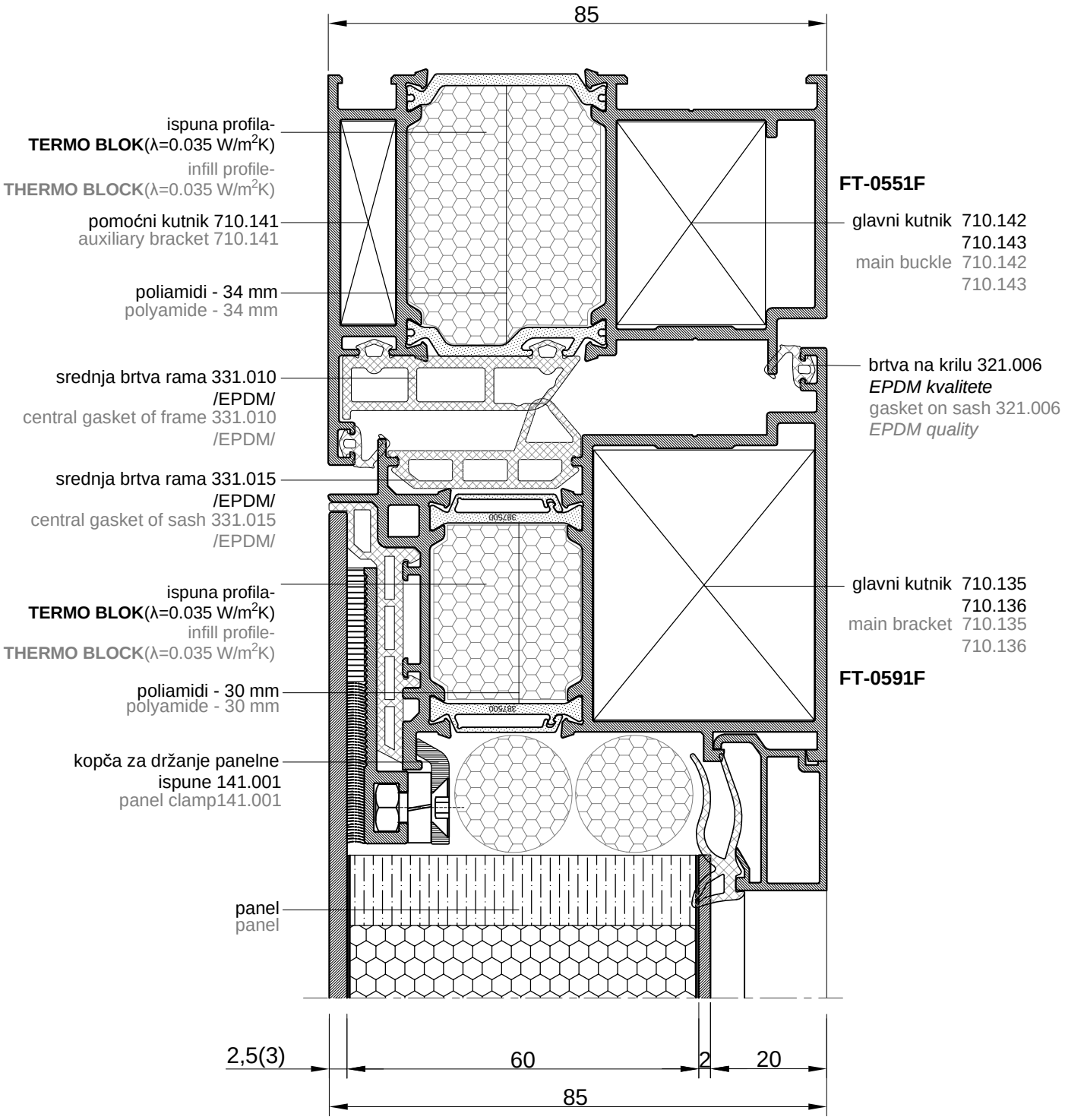
85
ispuna profila-
TERMO BLOK(λ=0.035 W/m2K)
infill profile-
THERMO BLOCK(λ=0.035 W/m2K)
pomoćni kutnik 710.141
auxiliary bracket 710.141
poliamidi - 34 mm
polyamide - 34 mm
srednja brtva rama 331.010
/EPDM/
central gasket of frame 331.010
/EPDM/
srednja brtva rama 331.015
/EPDM/
central gasket of sash 331.015
/EPDM/
ispuna profila-
TERMO BLOK(λ=0.035 W/m2K)
infill profile-
THERMO BLOCK(λ=0.035 W/m2K)
poliamidi - 30 mm
polyamide - 30 mm
kopča za držanje panelne
ispune 141.001
panel clamp141.001
panel
panel
FT-0551F
glavni kutnik 710.142
710.143
main buckle 710.142
710.143
brtva na krilu 321.006
EPDM kvalitete
gasket on sash 321.006
EPDM quality
glavni kutnik 710.135
710.136
main bracket 710.135
710.136
FT-0591F
2,5(3)
60
2
20
85

OPIS SISTEMA TERMO 85 VS i VP

DESCRIPTION OF SYSTEM TERMO 85 VS AND VP

Sistem se koristi za izradu ulaznih vrata i sastoji se od grupa:

System are use for entry door and consists of group:

- **Termo 85 VS** otvaranje vani (ulazna vrata sa staklenom ispunom)
- **Termo 85 VS** outward opening (entry door with glass infill)

- **Termo 85 VS** otvaranje unutra (ulazna vrata sa staklenom ispunom)
- **Termo 85 VS** inward opening (entry door with glass infill)

- **Termo 85 VP** otvaranje unutra (ulazna vrata sa panelnom ispunom)
- **Termo 85 VP** inward opening (entry door with panel infill)

Profili su izvedeni s prekinutim toplinskim mostom:

Profile are made with thermal break:

-osnovne ugradbene dubine rama: - 85 mm.....Termo 85 VS otvaranje vani i unutra; Termo 85 VP
- 88.5 mm...Termo 85 VP obostrano ravni lim

-the basic frame construction depth: - 85 mm.....Termo 85 VS inward and outward opening; Termo 85 VP
- 88.5 mm...Termo 85 VP both side hidden sash

Prekid toplinskog mosta postiže se poliamidnim trakama (34 mm za ram i 30 i 26 mm za krilo).
Radi poboljšanja toplinskih karakteristika (smanjenja toplinske provodljivosti) u komore profila se ugrađuju trake od ekstrudiranog polistirena (XPS-a).
U kombinaciji s troslojnim staklom i odgovarajućim distancerom stakla sistem može postići ukupni koeficijent prolaska topline Ud≥0.94 [W/m^{2}K] za panelna vrata.
Brtvljenje između krila i rama izvedeno je EPDM brtvama.
Staklo je u krilu učvršćeno unutarnjim letvicama te zabrtvljeno EPDM brtvama s obje strane.

Thermal break is achieved with polyamide tapes (34 mm for frame i 30 i 26 mm for sash).
In order to improve the thermal characteristics (decrease in thermal conductivity) in the chamber of profiles, are inserted strips of extruded polystyrene (XPS).
Combined with a triple pane glass and an appropriate glass spacer, the system can achieve a total heat transfer coefficient Ud≥0.94 [W/m^{2}K] for panel door.
Sash and frame sealing is done by using EPDM gaskets.
Glass inside the sash is secured by using glazing beads and seals by using EPDM gaskets on both side.

Karakteristike sistema:

-materijal	EN AW-6060
-masa krila	do 160 kg
-debljina stakla	do 71 mm
-materijal za brtvljenje (EPDM)	DIN 7863
-proračun Ud koeficijenta	DIN EN ISO 10077-2
-površinska obrada	DIN 17611
-kontrola kvalitete	DIN EN ISO 2041

Characteristics of system:

-material	EN AW-6060
-sash mass	to 160 kg
-glazing	to 71 mm
-sealing material (EPDM)	DIN 7863
-Ud coefficient calculation	DIN EN ISO 10077-2
-surface processing	DIN 17611
-quality control	DIN EN ISO 2041

Ispitivanja i certifikati
Testing and certificates

ISPITIVANJA I CERTIFIKATI/TESTING AND CERTIFICATES				
Vrsta ispitivanja Type of test	 Termo 85 VP -jednokrilna vrata- -single leaf door-	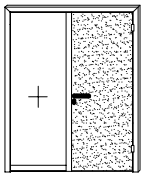 Termo 85 VP -jednokrilna vrata sa bočnim fiksnim- -single leaf door with side light-	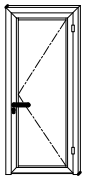 Termo 85 VS -jednokrilna vrata otv.vani- -single leaf door outward opening-	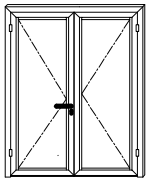 Termo 85 VS -dvokrilna vrata otv.vani- -double leaf door outward opening-
Zrakopropusnost EN12207 Air permeability EN 12207	**razred 4** **class 4**	**razred 4** **class 4**	**razred 4** **class 4**	**razred 4** **class 4**
Vodoneprpusnost EN 12208 Watertightness EN 12208	**5A**	**5A**	**9A**	**E750**
Otpornost na opterećenje vjetrom EN 12210 Wind resistance EN 12210	**C4/B4**	**C4**	**C3**	**C4/B4**
Buka Rw EN ISO 717-1 Airbourne sound insulation EN ISO 717-1	**44 dB**		**46 dB**	
Protuprovalnost EN 1627 Protection against burglary EN 1627	**RC3 (RC2)**		**RC2**	
Ponašanje između dvije različite klime EN 1121 Behaviour between two different climates EN 1121	-Operating forces EN 12214.....1 -Operating forces EN 12214.....1 -Klima C (EN12219)...B3/C3 -Klima C (EN12219)...B3/C3 -Klima D (EN12219)...B3/C3 -Klima D (EN12219)...B3/C3 -Klima E (EN12219)...B3/C3 -KlimaE (EN12219)...B3/C3			

		Uf1 W/m2K	Uf2 W/m2K	Uf3 W/m2K	Uf4 W/m2K	Uf5 W/m2K	Uf6 W/m2K	Uf7 W/m2K	Uf8 W/m2K	Uf9 W/m2K	Ug W/m2K	Ud W/m2K
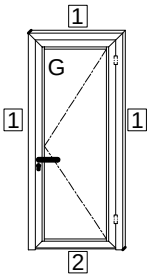	Termo 85 VS -otv. unutra- Termo 85 VS -inward opening-	1,6	1,9								0,7	≥1,1
											1,1	≥1,4
	Termo 85 VS -otv. vani- Termo 85 VS -outward opening-	1,6	2,1								0,7	≥1,2
											1,1	≥1,4
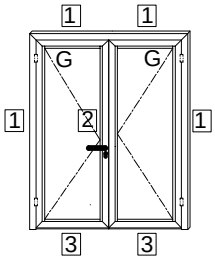	Termo 85 VS -otv. unutra- Termo 85 VS -inward opening-	1,6	1,7	1,9							0,7	≥1,1
											1,1	≥1,4
	Termo 85 VS -otv. vani- Termo 85 VS -outward opening-	1,6	1,6	2,1							0,7	≥1,1
											1,1	≥1,4
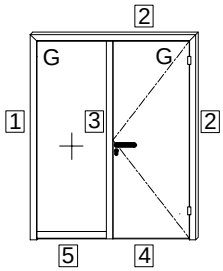	Termo 85 VS -otv. unutra- Termo 85 VS -inward opening-	1,2	1,7	1,6	1,9	1,1					0,7	≥1,0
											1,1	≥1,3
	Termo 85 VS -otv. vani- Termo 85 VS -outward opening-	1,2	1,8	1,7	2,1	1,1					0,7	≥1,1
											1,1	≥1,4
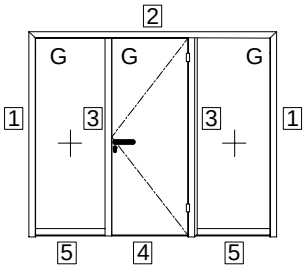	Termo 85 VS -otv. unutra- Termo 85 VS -inward opening-	1,2	1,7	1,6	1,9	1,1					0,7	≥0,982
											1,1	≥1,3
	Termo 85 VS -otv. vani- Termo 85 VS -outward opening-	1,2	1,8	1,7	2,1	1,1					0,7	≥1,0
											1,1	≥1,3
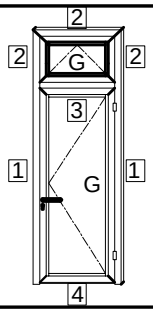	Termo 85 VS -otv. unutra- Termo 85 VS -inward opening-	1,8	1,8	1,8	1,9						0,7	≥1,3
											1,1	≥1,5
	Termo 85 VS -otv. vani- Termo 85 VS -outward opening-	1,9	1,8	1,8	2,1						0,7	≥1,3
											1,1	≥1,6
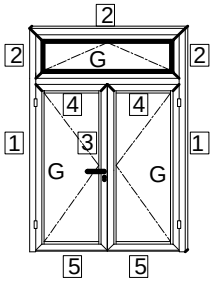	Termo 85 VS -otv. unutra- Termo 85 VS -inward opening-	1,8	1,8	1,7	1,8	1,9					0,7	≥1,2
											1,1	≥1,5
	Termo 85 VS -otv. vani- Termo 85 VS -outward opening-	1,9	1,8	1,6	1,8	2,1					0,7	≥1,2
											1,1	≥1,5

		Uf1 W/m2K	Uf2 W/m2K	Uf3 W/m2K	Uf4 W/m2K	Uf5 W/m2K	Uf6 W/m2K	Uf7 W/m2K	Uf8 W/m2K	Uf9 W/m2K	Ug W/m2K	Ud W/m2K
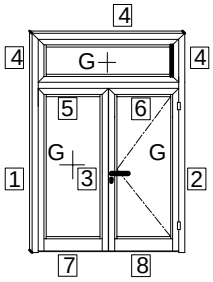	Termo 85 VS -otv. unutra- Termo 85 VS -inward opening-	1,2	1,7	1,6	1,2	1,1	1,6	1,1	1,9		0,7	≥1,0
											1,1	≥1,3
	Termo 85 VS -otv. vani- Termo 85 VS -outward opening-	1,6	1,9	1,7	1,6	1,1	1,7	1,1	2,1		0,7	≥1,1
											1,1	≥1,4

		Uf1 W/m2K	Uf2 W/m2K	Uf3 W/m2K	Uf4 W/m2K	Uf5 W/m2K	Uf6 W/m2K	Uf7 W/m2K	Uf8 W/m2K	Uf9 W/m2K	Up W/m2K	Ud W/m2K
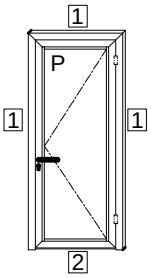	Termo 85 VP -otv.unutra- Termo 85 VP -inward opening-	1,8	2,3								0,4	≥0,845
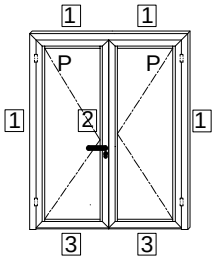	Termo 85 VP -otv.unutra- Termo 85 VP -inward opening-	1,8	2,0	2,3							0,4	≥0,811
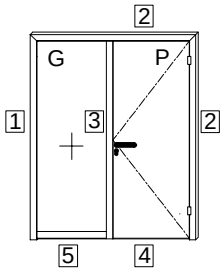	Termo 85 VP -otv.unutra- Termo 85 VP -inward opening-	1,5	2,0	1,8	2,3	1,2					Up=0,4 Ug=0,7	≥0.91
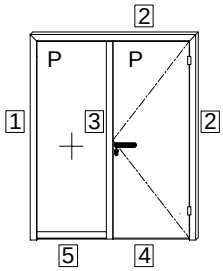	Termo 85 VP -otv.unutra- Termo 85 VP -inward opening-	1,3	2,0	1,6	2,3	1,0					0,4	≥0,73
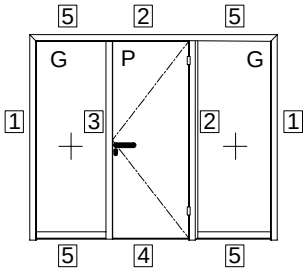	Termo 85 VP -otv.unutra- Termo 85 VP -inward opening-	1,5	2,0	1,8	2,3	1,2					Up=0,4 Ug=0,7	≥0.91
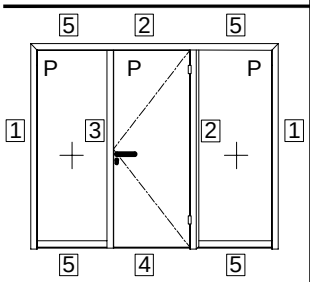	Termo 85 VP -otv.unutra- Termo 85 VP -inward opening-	1,3	2,0	1,6	2,3	1,0					0,4	≥0,627

G - Staklo G - Glass
P - Panel P - Panel

		Uf1 W/m2K	Uf2 W/m2K	Uf3 W/m2K	Uf4 W/m2K	Uf5 W/m2K	Uf6 W/m2K	Uf7 W/m2K	Uf8 W/m2K	Uf9 W/m2K	Up W/m2K	Ud W/m2K
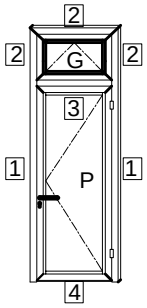	Termo 85 VP -otv.unutra- Termo 85 VP -inward opening-	2,0	1,5	1,8	2,3						Up=0,4 Ug=0,7	≥0,96
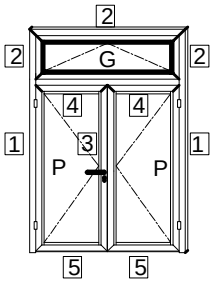	Termo 85 VP -otv.unutra- Termo 85 VP -inward opening-	2,0	1,5	2,0	1,8	2,3					Up=0,4 Ug=0,7	≥0,9
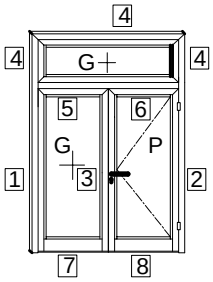	Termo 85 VP -otv.unutra- Termo 85 VP -inward opening-	1,5	2,0	1,8	1,5	1,2	1,8	1,2	2,3		Up=0,4 Ug=0,7	≥1,0
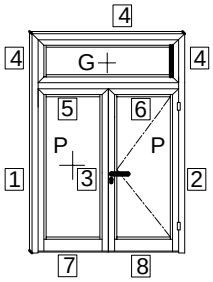	Termo 85 VP -otv.unutra- Termo 85 VP -inward opening-	1,3	2,0	1,6	1,5	1,1	1,8	1,0	2,3		Up=0,4 Ug=0,7	≥0,795

G - Staklo G - Glass
P - Panel P - Panel

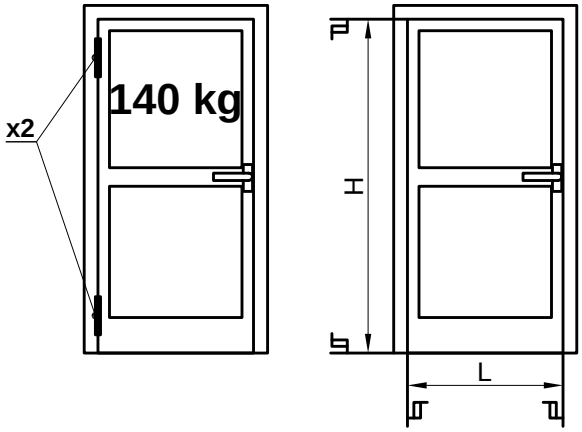

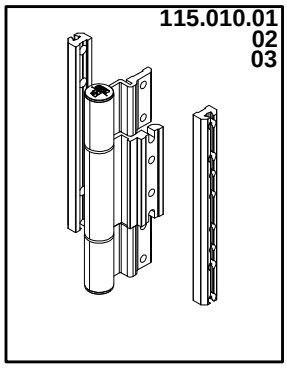

- Cilindrična šarka FEAL-GIESE
  za vrata Termo 85 VS i VP otvaranje unutra
- Barrel door hinge FEAL-GIESE
  for Termo 85 VS i VP inward opening

H \ L	600	700	800	900	1000	1100	1200	1300	1400	1500	1600	1700	1800
3000	140	140	140	140	140	140	140	140	140	130	118	106	
2900	140	140	140	140	140	140	140	140	140	123	112	104	
2800	140	140	140	140	140	140	140	140	130	116	106	99	
2700	140	140	140	140	140	140	140	140	123	111	101	95	
2600	140	140	140	140	140	140	140	130	116	105	97	91	
2500	140	140	140	140	140	140	140	122	109	99	94	88	
2400	140	140	140	140	140	140	130	113	104	95	90	85	
2300	140	140	140	140	140	140	119	106	98	91	85	83	
2200	140	140	140	140	140	127	112	101	94	88	83	80	
2100	140	140	140	140	140	119	105	95	90	84	80	77	
2000	140	140	140	140	127	111	99	91	85	81	77	74	
1900	140	140	140	140	116	102	94	87	81	78	74	73	
1800	140	140	140	126	108	97	88	83	78	76	73	X	
1700	140	140	140	115	99	91	84	80	76	73	X	X	
1600	140	140	125	105	94	85	80	76	73	X	X	X	
1500	140	140	112	97	88	81	77	73	X	X	X	X	
1400	140	123	102	90	83	77	73	X	X	X	X	X	
1300	140	109	94	84	78	73	X	X	X	X	X	X	
1200													

Pmax

H ↑

L →

X - nisu dopuštene dimenzije
X - Dimensionare not allowed

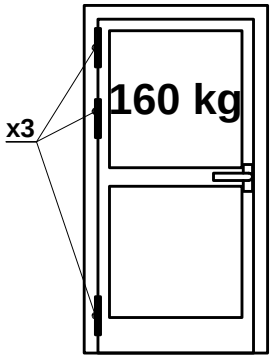

(*)

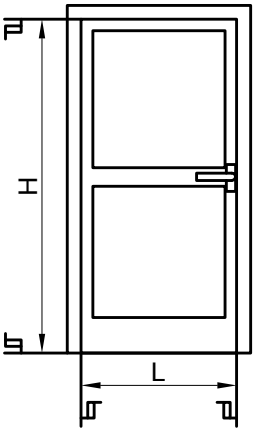

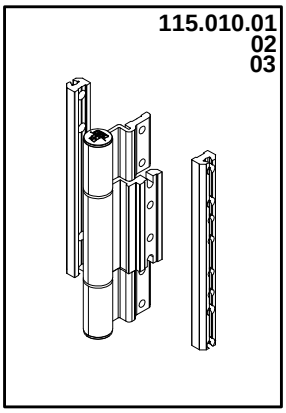

- Cilindrična šarka FEAL-GIESE za vrata Termo 85 VS i VP otvaranje unutra
- Barrel door hinge FEAL-GIESE for Termo 85 VS i VP inward opening

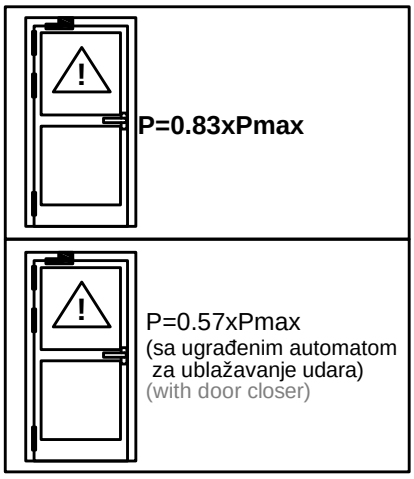

Pmax \ L	600	700	800	900	1000	1100	1200	1300	1400	1500	1600	1700	1800
3000	160	160	160	160	160	160	160	160	160	149	134	122	
2900	160	160	160	160	160	160	160	160	160	141	128	118	
2800	160	160	160	160	160	160	160	160	149	133	122	114	
2700	160	160	160	160	160	160	160	160	141	126	115	109	
2600	160	160	160	160	160	160	160	149	133	120	110	104	
2500	160	160	160	160	160	160	160	139	125	114	107	101	
2400	160	160	160	160	160	160	149	130	118	109	102	98	
2300	160	160	160	160	160	160	136	122	112	104	98	94	
2200	160	160	160	160	160	146	128	115	107	101	94	91	
2100	160	160	160	160	160	136	120	109	102	96	91	88	
2000	160	160	160	160	146	126	114	104	98	93	88	85	
1900	160	160	160	160	126	117	107	99	93	90	85	83	
1800	160	160	160	144	123	110	101	94	90	86	83	X	
1700	160	160	160	131	114	104	96	91	86	83	X	X	
1600	160	160	142	120	107	98	91	86	83	X	X	X	
1500	160	160	128	110	101	93	88	83	X	X	X	X	
1400	160	141	117	102	94	88	83	X	X	X	X	X	
1300	160	125	107	96	90	83	X	X	X	X	X	X	
1200													

H ↑ L →

X - nisu dopuštene dimenzije
X - Dimensions are not allowed

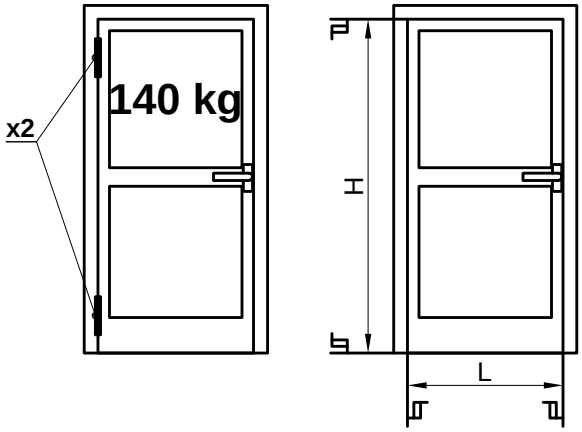

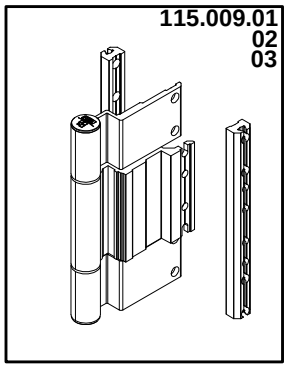

- Cilindrična šarka FEAL-GIESE
  za vrata Termo 85 VS i VP otvaranje vani
- Barrel door hinge FEAL-GIESE
  for 85 VS i VP outward opening

Pmax (H)	600	700	800	900	1000	1100	1200	1300	1400	1500	1600	1700	1800
3000	140	140	140	140	140	140	140	140	140	130	118	106
2900	140	140	140	140	140	140	140	140	140	123	112	104
2800	140	140	140	140	140	140	140	140	130	116	106	99
2700	140	140	140	140	140	140	140	140	123	111	101	95
2600	140	140	140	140	140	140	140	130	116	105	97	91
2500	140	140	140	140	140	140	140	122	109	99	94	88
2400	140	140	140	140	140	140	130	113	104	95	90	85
2300	140	140	140	140	140	140	119	106	98	91	85	83
2200	140	140	140	140	140	127	112	101	94	88	83	80
2100	140	140	140	140	140	119	105	95	90	84	80	77
2000	140	140	140	140	127	111	99	91	85	81	77	74
1900	140	140	140	140	116	102	94	87	81	78	74	73
1800	140	140	140	126	108	97	88	83	78	76	73	X
1700	140	140	140	115	99	91	84	80	76	73	X	X
1600	140	140	125	105	94	85	80	76	73	X	X	X
1500	140	140	112	97	88	81	77	73	X	X	X	X
1400	140	123	102	90	83	77	73	X	X	X	X	X
1300	140	109	94	84	78	73	X	X	X	X	X	X
1200												

H ↑ L →

X - nisu dopuštene dimenzije
X - Dimensions are not allowed

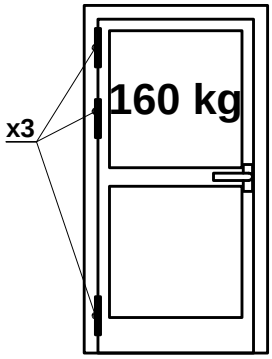

(*)

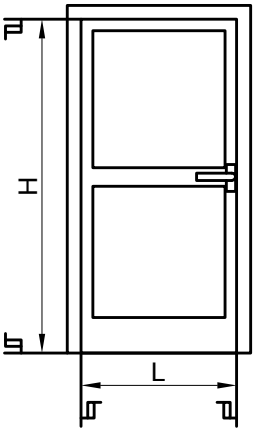

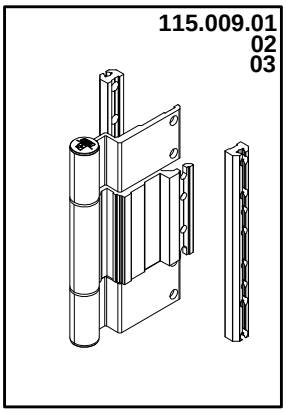

- Cilindrična šarka FEAL-GIESE za vrata Termo 85 VS i VP otvaranje vani
- Barrel door hinge FEAL-GIESE for Termo 85 VS i VP outward opening

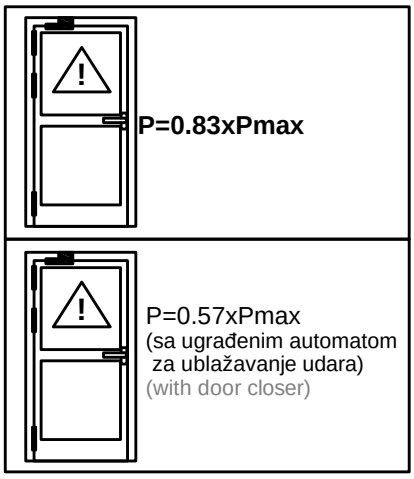

H \ L	600	700	800	900	1000	1100	1200	1300	1400	1500	1600	1700	1800
3000	160	160	160	160	160	160	160	160	160	149	134	122	
2900	160	160	160	160	160	160	160	160	160	141	128	118	
2800	160	160	160	160	160	160	160	160	149	133	122	114	
2700	160	160	160	160	160	160	160	160	141	126	115	109	
2600	160	160	160	160	160	160	160	149	133	120	110	104	
2500	160	160	160	160	160	160	160	139	125	114	107	101	
2400	160	160	160	160	160	160	149	130	118	109	102	98	
2300	160	160	160	160	160	160	136	122	112	104	98	94	
2200	160	160	160	160	160	146	128	115	107	101	94	91	
2100	160	160	160	160	160	136	120	109	102	96	91	88	
2000	160	160	160	160	146	126	114	104	98	93	88	85	
1900	160	160	160	160	126	117	107	99	93	90	85	83	
1800	160	160	160	144	123	110	101	94	90	86	83	X	
1700	160	160	160	131	114	104	96	91	86	83	X	X	
1600	160	160	142	120	107	98	91	86	83	X	X	X	
1500	160	160	128	110	101	93	88	83	X	X	X	X	
1400	160	141	117	102	94	88	83	X	X	X	X	X	
1300	160	125	107	96	90	83	X	X	X	X	X	X	
1200													

Pmax

H ↑

L →

X - nisu dopuštene dimenzije

X - Dimensions are not allowed

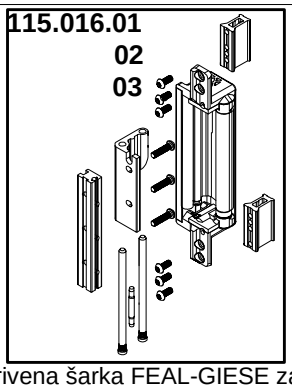

- Skrivena šarka FEAL-GIESE za vrata Termo 85 VS i VP otvaranje unutra
- Hide door hinge FEAL-GIESSE for Termo 85 VS VP inward opening

Tablica maksimalne nosivosti Maximum load chart			
	Pmax		
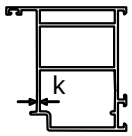	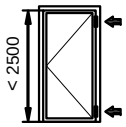	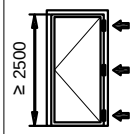	 Sa ugrađenim automatom za ublaživanje udara With door closer
k ≥ 1.8	200 kg	200 kg	134 kg
k = 1.6÷1.8	180 kg	180 kg	114 kg

Koefcijent smanjenja težine (CRP)
Weight reduction coefficient (CRP)

X - nisu dopuštene dimenzije
X - Dimensions are not allowed

H \ L	500	600	700	800	900	1000	1100	1200	1300	1400	1500	1600	1700	1800	1900	2000
4000	1	1	1	1	1	1	1	1	1	1	1	1	1	1	1	
3900	1	1	1	1	1	1	1	1	1	1	1	1	1	1	0.95	
3800	1	1	1	1	1	1	1	1	1	1	1	1	1	1	0.90	
3700	1	1	1	1	1	1	1	1	1	1	1	1	1	0.95	0.87	
3600	1	1	1	1	1	1	1	1	1	1	1	1	1	0.90	0.83	
3500	1	1	1	1	1	1	1	1	1	1	1	1	0.94	0.86	0.80	
3400	1	1	1	1	1	1	1	1	1	1	1	1	0.90	0.83	0.77	
3300	1	1	1	1	1	1	1	1	1	1	1	0.94	0.85	0.79	0.75	
3200	1	1	1	1	1	1	1	1	1	1	1	0.89	0.82	0.76	0.71	
3100	1	1	1	1	1	1	1	1	1	1	0.94	0.85	0.78	0.73	0.69	
3000	1	1	1	1	1	1	1	1	1	1	0.88	0.82	0.75	0.70	0.67	
2900	1	1	1	1	1	1	1	1	1	0.93	0.84	0.76	0.72	0.68	0.65	
2800	1	1	1	1	1	1	**1**	1	1	0.88	0.80	0.74	0.69	0.65	0.63	
2700	1	1	1	1	1	1	1	1	0.93	0.83	0.76	0.71	0.67	0.63	0.61	
2600	1	1	1	1	1	1	1	1	0.88	0.79	0.72	0.68	0.64	0.61	0.59	
2500	1	1	1	1	1	1	1	0.93	0.83	0.75	0.69	0.65	0.62	0.60	x	
2400	1	1	1	1	1	1	1	0.87	0.78	0.71	0.67	0.63	0.60	x	x	
2300	1	1	1	1	1	1	**0.93**	0.81	0.74	0.68	0.64	0.61	x	x	x	
2200	1	1	1	1	1	1	0.85	0.76	0.70	0.65	0.61	x	x	x	x	
2100	1	1	1	1	1	0.91	0.80	0.72	0.67	0.63	0.59	x	x	x	x	
2000	1	1	1	1	1	0.85	0.75	0.68	0.64	0.60	x	x	x	x	x	
1900																

Primjer 1 → (2800)
Primjer 2 → (2300)
Primjer 1, 2 (1100)

Za dobivanje stvarne najveće težine krila (P) pomnožite vrijednost P(max) odabranu u tablici maksimalne nosivosti sa koefcijentom smanjenja težina (CRP) odgovara veličini krila (Širina x Visina)

Primjer a) :
WxH = 1200 x 2800 mm No. 3 šarke
Debljina stijenke profila 1.8 mm
Pmax = 200 kg CRP = 1
P = 200 x 1 = 200 kg

Primjer b) :
WxH = 1200 x 2300 mm No. 2 šarke
Debljina stijenke profila 1.8 mm
Pmax = 200 kg CRP = 0.93
P = 200 x 0.93 = 186 kg

To obtain the real sash maximum weight (P) multiply the Pmax value chosen in the Maximum load chart with the weight reduction coefficient (CRP) corresponding to the sash size (WxH)

Example a) :
WxH = 1200 x 2800 mm No. 3 hinges
Profile thichness 1.8 mm
Pmax = 200 kg CRP = 1
P = 200 x 1 = 200 kg

Example b) :
WxH = 1200 x 2300 mm No. 2 hinges
Profile thichness 1.8 mm
Pmax = 200 kg CRP = 0.93
P = 200 x 0.93 = 186 kg

Statički dijagram -opterećenje vjetrom **Structural diagram of wind load**
Trokutasto i trapeziodno opterećenje Triangular and trapezoidal load

Osnovni uvjeti
Basic assumptions:

Jed. opterećenje 1.0 kN/m² Unit load 1.0 kN/m²
fdop. / adm. =L / 200

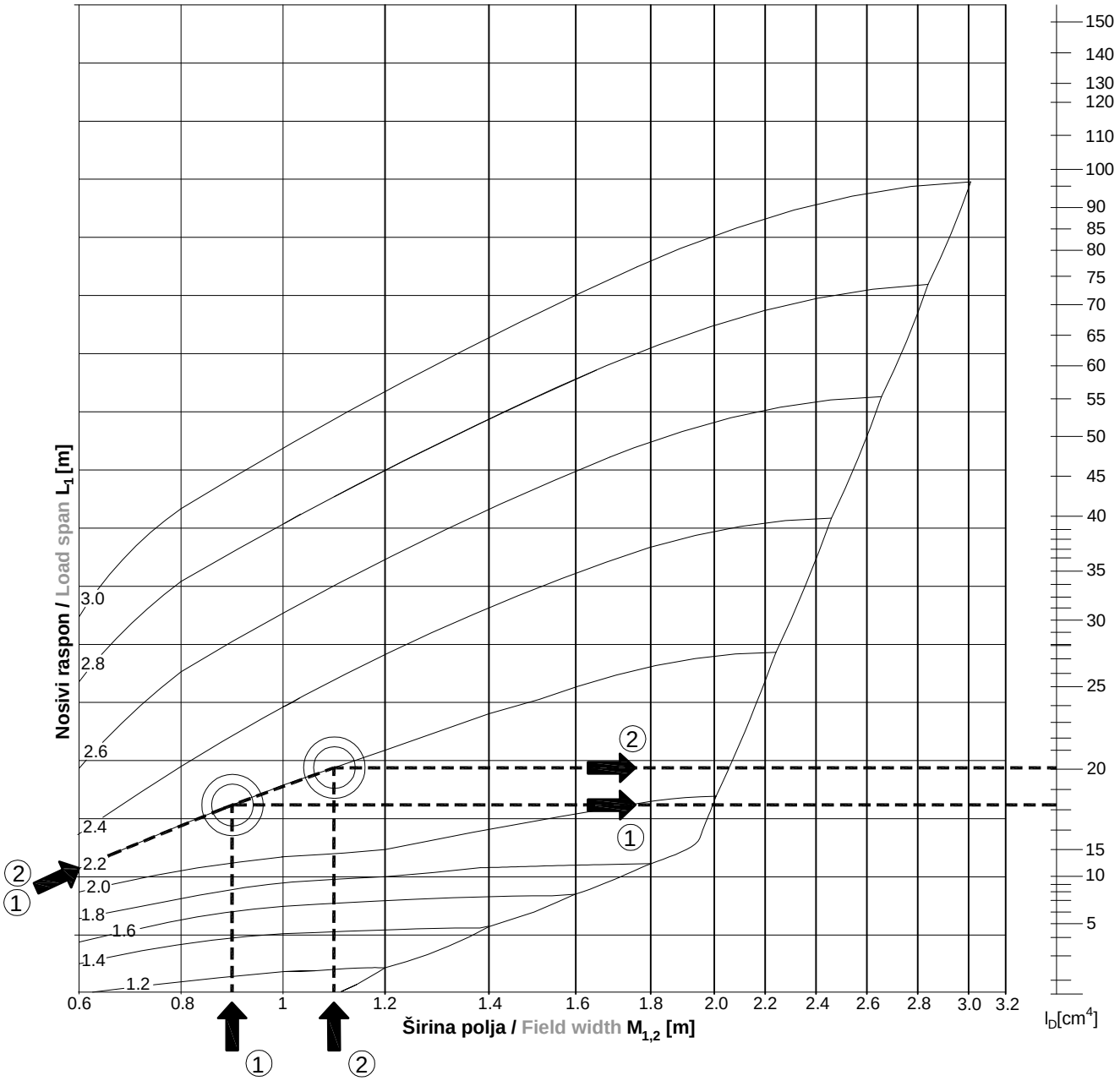

Statički dijagram -opterećenje vjetrom Structural diagram of wind load
Trokutasto i trapeziodno opterećenje Triangular and trapezoidal load

Primjer primjene dijagrama opterećenja Example of load diagram application

1. Ulazni podaci / Input data:

Nosivi raspon / Load span:
L= 2.20 m

Širina polja / Field width:
M_1= 0,9 m
M_2=1,1 m

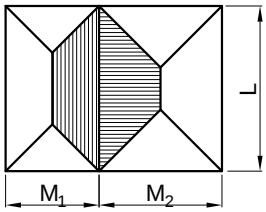

Tlak vjetra*
Wind pressure*= 0.9 kN/m²
Podtlak vjetra*
Wind suction*= -0.7 kN/m²

*opterećenje vjetrom mora biti izračunato prema važećim standardima te poziciji i obliku građevine
*the wind load must be determined according to the valid standards and to the position and shape of the building.

2. Određivanje potrebnog momenta Ix pod jediničnim opt. 1.0 kN/m²
Determination of required moment Ix under unit load 1.0 kN/m²

Vrijednosti momenata inercije iz dijagrama
Values of moment of inertia from diagram :

I_{D1}= 18 cm^4 (1 dijagram / diagram)

I_{D2}= 20 cm^4 (2 dijagram / diagram)

Zbroj s obje strane
Sum of both sides: I_D= 38 cm^4

3. Određivanje potrebnog momenta Ix pod opterećenjem na građevini
Determination of required moment Ix under load on the building

Pretpostavljeni tlak vjetra*/ Wind pressure assumed*
w_p= 0.9 kN/m²
potrebni / required $I_x = w_p \cdot I_D = 0.9 \cdot 38$ cm^4 = 34 cm^4

Pretpostavljeni podtlak vjetra*/ Wind suction assumed*
w_s= -0.7 kN/m²
potrebni / required $I_x = w_s \cdot I_D = (-0.7) \cdot 38$ cm^4 =-26.6 cm^4

4. Odabire se veća apsolutba vrijednost: 34 cm^4
Greater absolute value is selected: 34 cm^4

5. Odabrati profil iz tablice
Select the profile from the table

Statičke jednadžbe Structural formulas

Trapezoidno opterećenje
Trapeziodal load

$M_{1,2}<L_1$

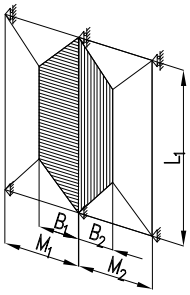

Trokutasto opterećenje
Triangular load

$M_{3,4}\geq L_2$

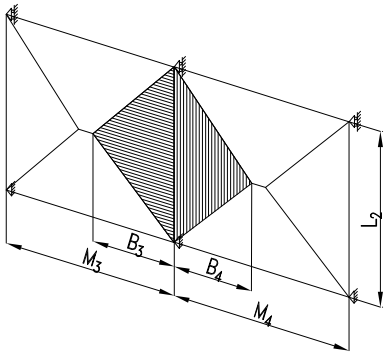

I_x (cm^4) = Moment inercije / Moment of inertia
$L_{1,2}$ (cm) = Nosivi raspon opterećenja / Load span
$B_{1,2}$ (cm) = Širina opterećenja trapezoidnog opterećenja / Load width of trapezoidal load $B_{1,2}=M_{1,2}/2$
$B_{3,4}$ (cm) = Širina opterećenja trokutasto opterećenja / Load width of triangular load $B_{3,4}=L_2/2$
w_p (kN/cm²) =Tlak vjetra / Wind pressure
w_s (kN/cm²) =Podtlak vjetra / Wind suction
p_w (kN/cm) = Linijsko opterećenje / Line load
E (kN/cm²) = Modul elastičnosti / Modulus of elasticity $7 \cdot 10^3$
fdop. / adm. (cm) = dopušteni progib / adm. deflection

Statitički sistem trapezoidnog opterećenja
Structural system trapezoidal load

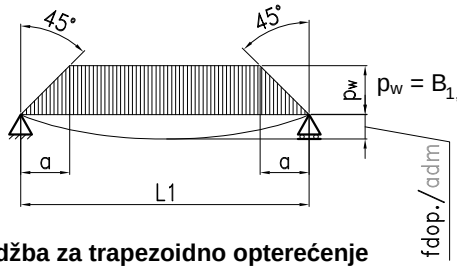

$p_w = B_{1,2} \times w_1$

$B_{1,2}=\frac{M_{1,2}}{2}$

Statički sistem trokutastog opterećenja
Statical system triangular load

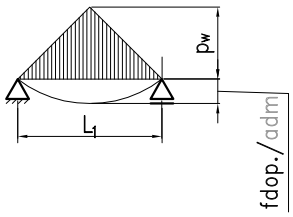

$p_w = B_{3,4} \times w_1$

$B_{3,4}=\frac{L_2}{2}$

Jednadžba za trapezoidno opterećenje
Calculation formula trapezoidal load

$$Ix=\frac{pw \cdot L_1^4 T}{1920 \cdot E \cdot fdop./adm.} \cdot \left(25 - 40\frac{a^2}{L_1^2} + 16\frac{a^4}{L_1^4}\right)$$

Jednadžba za trokutasto opterećenje
Calculation formula triangular load

$$Ix=\frac{pw \cdot L_2^4}{120 \cdot E \cdot fdop./adm.}$$

Statički dijagram težina stakla Structural diagram glass load

Osnovni uvjeti:
Basic assumptions:

- fdop. / adm. = 3 mm
- Težina stakla Glass load (0.15 kN/m²)

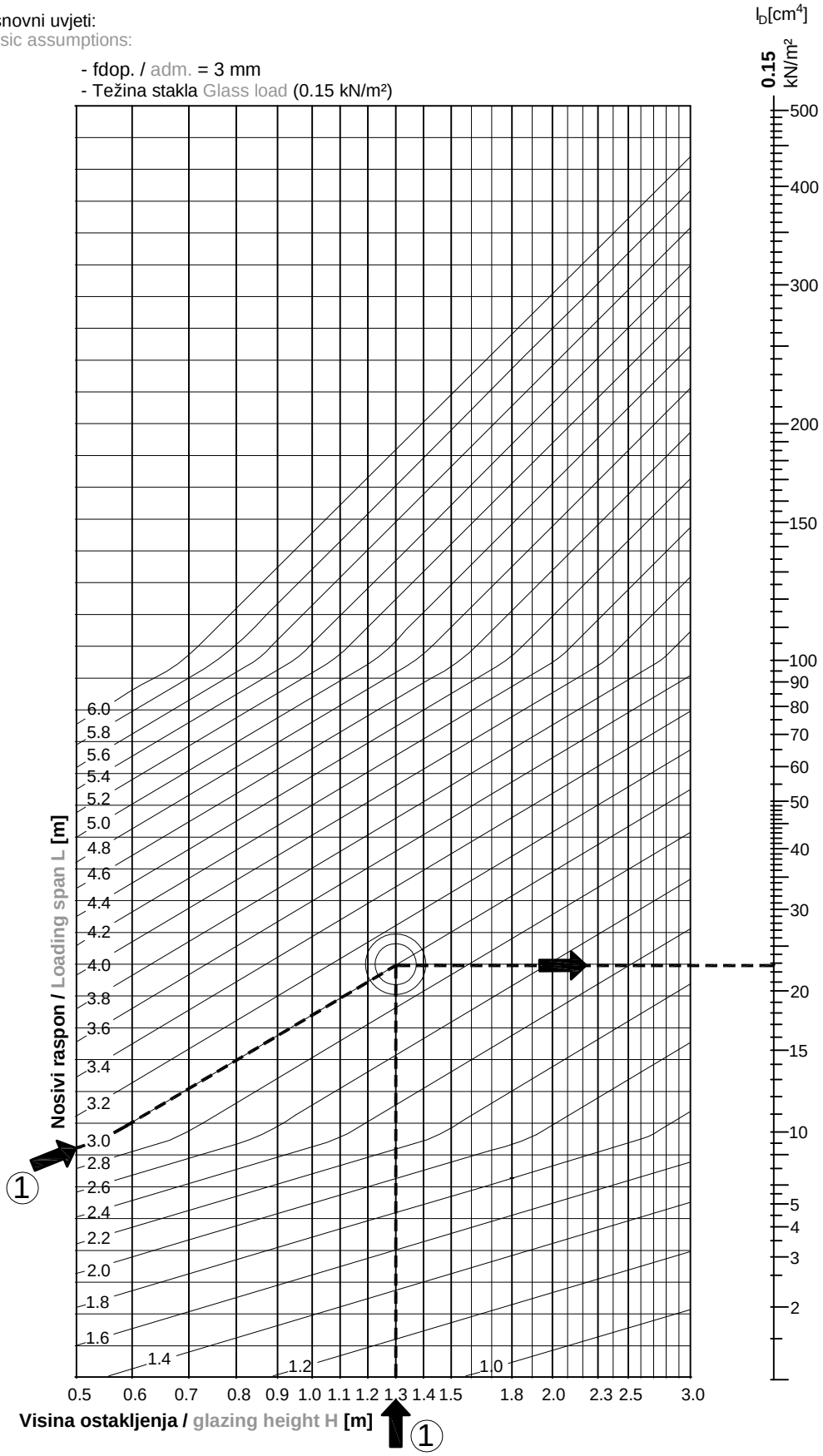

Statički dijagram težina stakla Structural diagram glass load

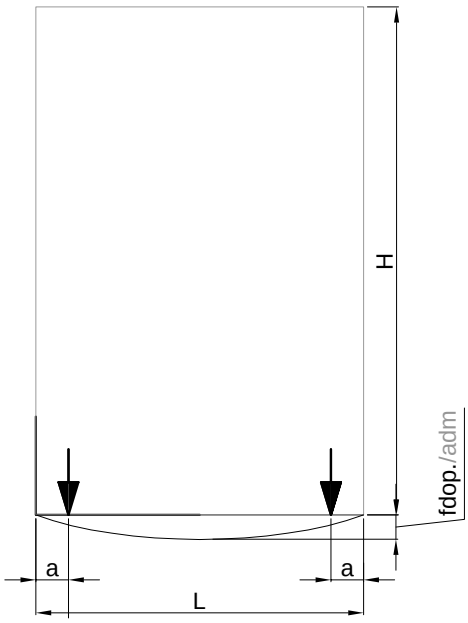

1. Ulazni podaci / Input data:

Širina raspona / Load span:
L= 3.00 m

Visina ostakljenja /Glazing height:
H = 1.30 m

Debljina ostakljenja /Glazing thickness:
D = 20 mm*

* uzima se u obzir samo debljina staklenih ploha
* only glass pane thickness is calculated

2. Određivanje potrebnog momenta Iy pod jediničnim opt. 0.15 kN/m²
Determination of required moment Iy under unit load 0.15 kN/m²

za / for qs 0.15 kN/m²
$Iy_{0.15}$ = 23 cm^4 (① dijagram / diagram)

3. Određivanje potrebnog momenta Ix pod opterećenjem na objektu
Determination of required moment Ix under load on the building

Debljina stakla Glass thickness D=20 mm ==>> K=3.33

Potrebni / required $Iy=K_{20} \cdot Iy_{0.15}$ = (3.33) · 23 cm^4 =77 cm^4

4. Odabrati profil iz tablice
Select the profile from the table

!

Vlastita težina profila nije uzeta u opterećenje !
The dead weight of the profile is not considered !

Statičke jednadžbe Structural formulas

Nosač na dva oslonca / Beam on 2 supports

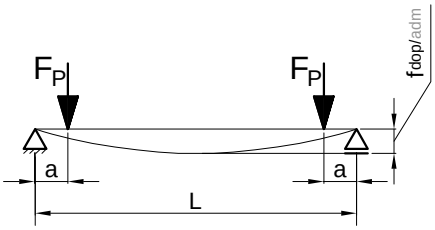

a = 150 mm fiksno / fixed

$$F = \frac{H \cdot L}{2} \cdot q_S$$

$$Iy = \frac{F \cdot a}{24 \cdot E \cdot fdop / adm.} \cdot (3 \cdot L^2 - 4\,a^2)$$

I_y	(cm^4) = Moment inercije / Moment of inertia
F_P	(kN) = Pojedinačno opterećenje / Single load
a	(cm) = Udaljenost oslonca / Support distance
H	(cm) = Visina stakla / Pane height
L	(cm) = Širina raspona / Load span
q_S	(kN/cm²) = Težina stakla / Glass weight
fdop. / adm.	(cm) = dop.progib / adm. deflection

Tablica 1. Težina stakla
Table 1. Glass weight

Koeficijent K Coefficient K	1	1.33	1.66	2	2.33	2.66	3	3.33	3.66	4	4.33	4.66	5	5.33	5,66	6	6.33	6.66	7	7.33	7.66	8
kN/m^2	0.15	0.20	0.25	0.30	0.35	0.40	0.45	0.50	0.55	0.60	0.65	0.70	0.80	0.85	0.90	0.95	1.00	1.05	1.10	1.15	1.20	1.25
kg/m^2	15	20	25	30	35	40	45	50	55	60	65	70	80	85	90	95	100	105	110	115	120	125
Deblj. stakla (mm) D Glass thick. (mm) D	6	8	10	12	14	16	18	20	22	24	26	28	30	32	34	36	38	40	42	44	46	48

①

Vrijednosti momenta inercije
Moment of inertia values

Tip otvaranja Opening type	Profili Profiles	Izgled View	Ix (cm^4)	Iy (cm^4)
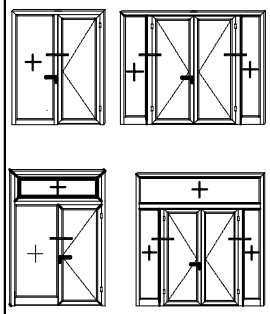	**FT-0574 F**	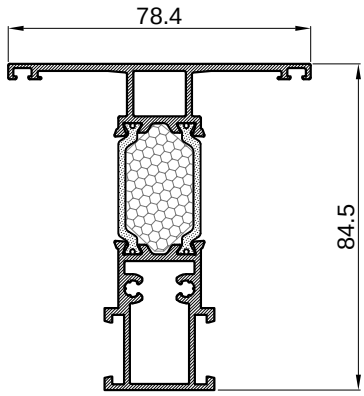	37.64	11.04
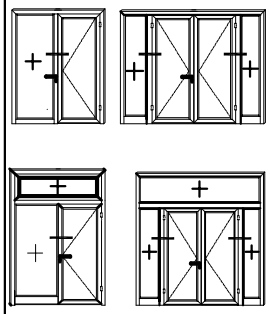	**FT-0575 F**	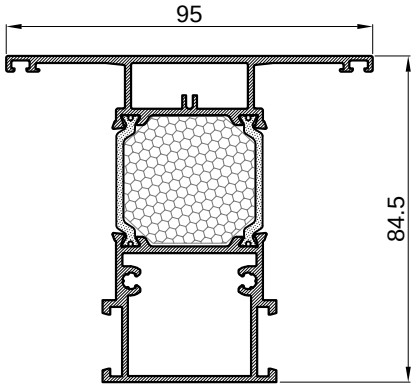	46.60	25.03
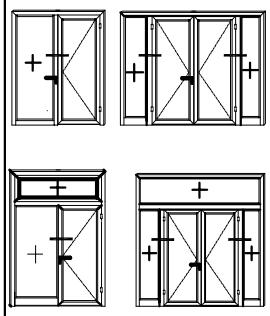	**FT-0577 F**	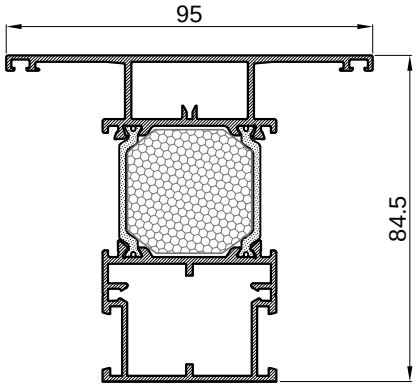	44.91	25.18
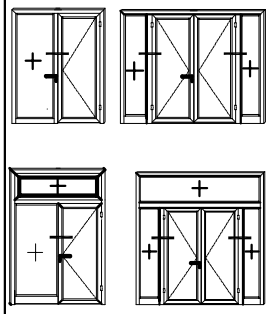	**FT-0580 F**	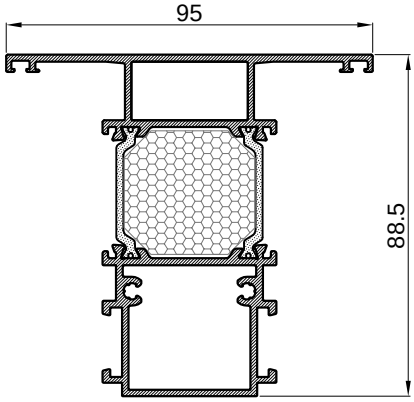	53.30	28.44

Vrijednosti momenta inercije
Moment of inertia values

Tip otvaranja Opening type	Profili Profiles	Izgled View	Ix (cm^4)	Iy (cm^4)
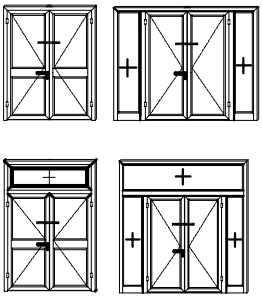	**FT-0561 F** **+** **FT-0571 F**	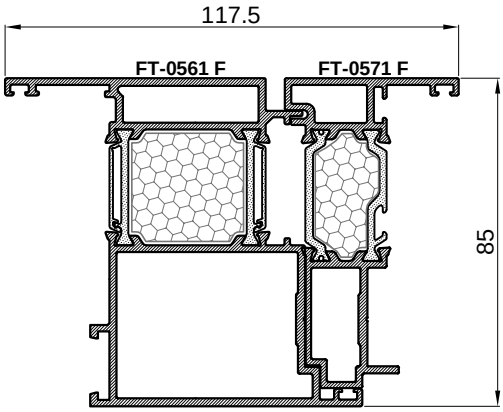	**82.41**	**81.65**
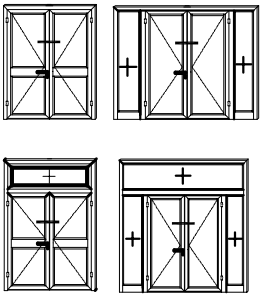	**FT-0563 F** **+** **FT-0571 F**	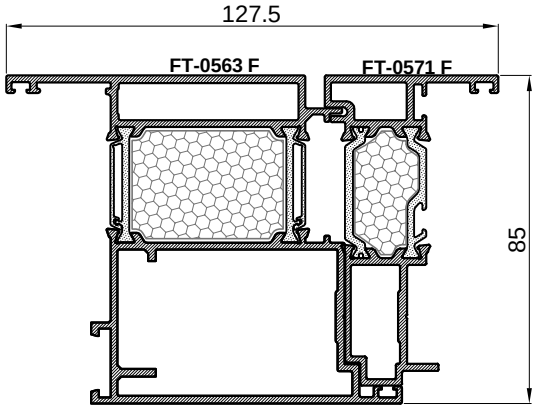	**90.86**	**113.87**
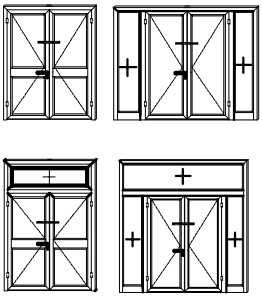	**FT-0562 F** **+** **FT-0572 F**	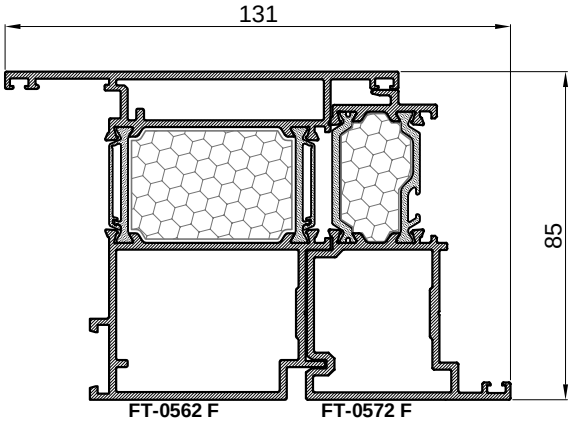	**92.00**	**118.64**

Vrijednosti momenta inercije
Moment of inertia values

Tip otvaranja Opening type	Profili Profiles	Izgled View	Ix (cm^4)	Iy (cm^4)
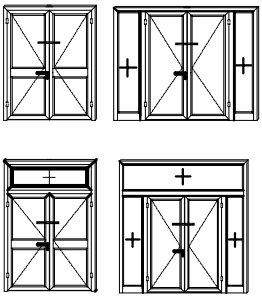	**FT-0564 F** **+** **FT-0572 F**	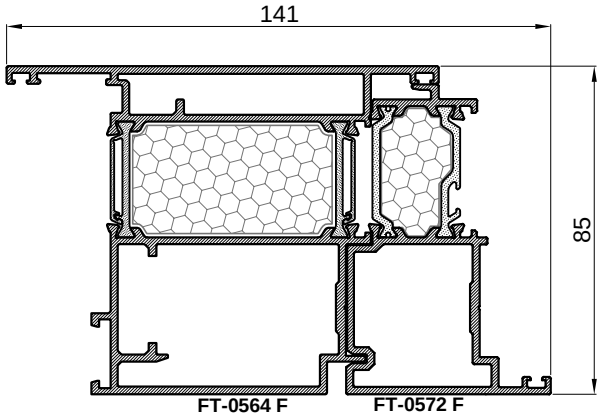	**100.44**	**158.78**
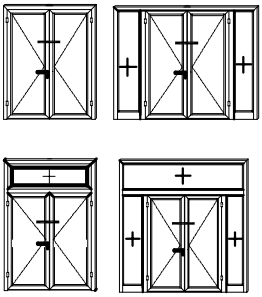	**FT-0591 F** **+** **FT-0571 F**	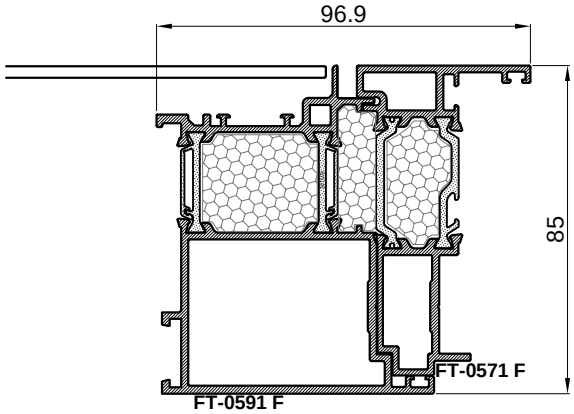	**67.27**	**62.15**
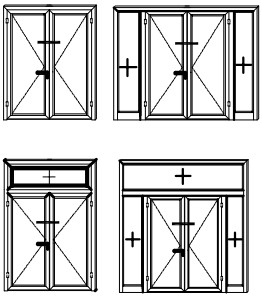	**FT-0592 F** **+** **FT-0571 F**	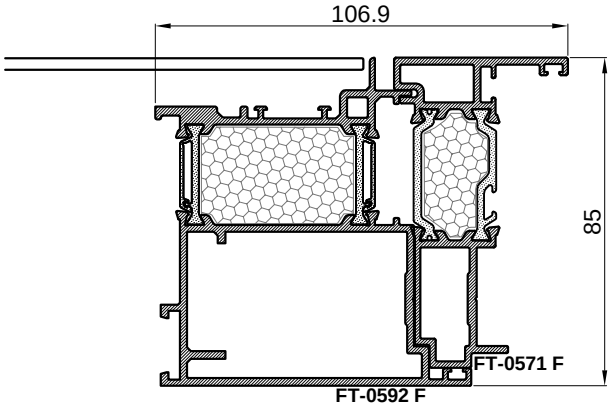	**74.12**	**92.53**

Vrijednosti momenta inercije
Moment of inertia values

Tip otvaranja Opening type	Profili Profiles	Izgled View	Ix (cm^4)	Iy (cm^4)
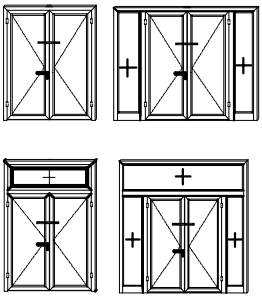	**FT-0593 F** **+** **FT-0571 F**	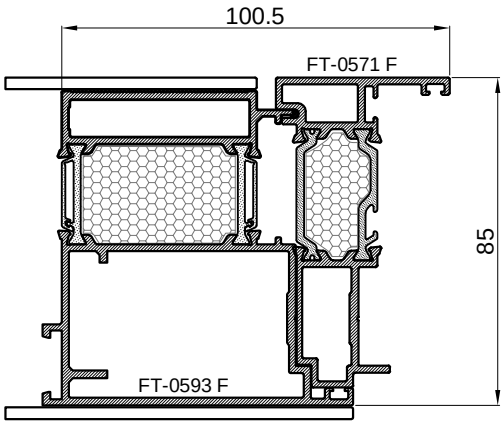	**80.42**	**93.56**

Profili
Profiles

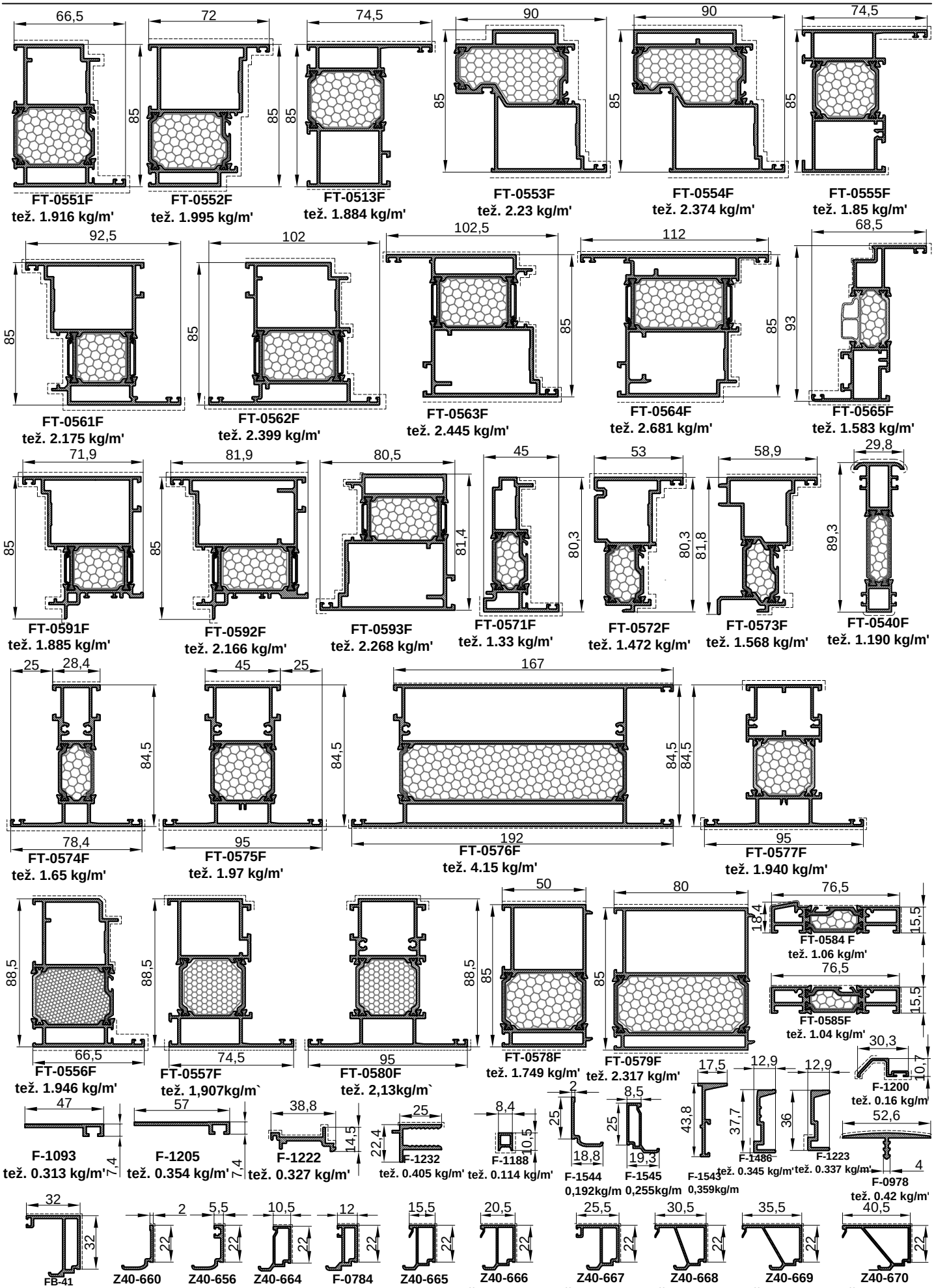
66,5
85
FT-0551F
tež. 1.916 kg/m'
72
85
FT-0552F
tež. 1.995 kg/m'
74,5
85
FT-0513F
tež. 1.884 kg/m'
90
85
FT-0553F
tež. 2.23 kg/m'
90
85
FT-0554F
tež. 2.374 kg/m'
74,5
85
FT-0555F
tež. 1.85 kg/m'
92,5
85
FT-0561F
tež. 2.175 kg/m'
102
85
FT-0562F
tež. 2.399 kg/m'
102,5
85
FT-0563F
tež. 2.445 kg/m'
112
85
FT-0564F
tež. 2.681 kg/m'
68,5
93
FT-0565F
tež. 1.583 kg/m'
71,9
85
FT-0591F
tež. 1.885 kg/m'
81,9
85
FT-0592F
tež. 2.166 kg/m'
80,5
81,4
FT-0593F
tež. 2.268 kg/m'
45
80,3
FT-0571F
tež. 1.33 kg/m'
53
80,3
81,8
FT-0572F
tež. 1.472 kg/m'
58,9
FT-0573F
tež. 1.568 kg/m'
29,8
89,3
FT-0540F
tež. 1.190 kg/m'
25
28,4
84,5
78,4
FT-0574F
tež. 1.65 kg/m'
45
25
84,5
95
FT-0575F
tež. 1.97 kg/m'
167
84,5
84,5
192
FT-0576F
tež. 4.15 kg/m'
95
FT-0577F
tež. 1.940 kg/m'
88,5
66,5
FT-0556F
tež. 1.946 kg/m'
88,5
74,5
FT-0557F
tež. 1,907kg/m`
88,5
95
FT-0580F
tež. 2,13kg/m`
50
85
FT-0578F
tež. 1.749 kg/m'
80
85
FT-0579F
tež. 2.317 kg/m'
76,5
18,4
15,5
FT-0584 F
tež. 1.06 kg/m'
76,5
15,5
FT-0585F
tež. 1.04 kg/m'
30,3
10,7
F-1200
tež. 0.16 kg/m
47
7,4
F-1093
tež. 0.313 kg/m'
57
7,4
F-1205
tež. 0.354 kg/m'
38,8
14,5
F-1222
tež. 0.327 kg/m'
25
22,4
F-1232
tež. 0.405 kg/m'
8,4
10,5
F-1188
tež. 0.114 kg/m'
2
25
18,8
F-1544
0,192kg/m
8,5
25
19,3
F-1545
0,255kg/m
17,5
43,8
F-1543
0,359kg/m
12,9
37,7
F-1486
tež. 0.345 kg/m'
12,9
36
F-1223
tež. 0.337 kg/m'
52,6
4
F-0978
tež. 0.42 kg/m'
32
32
FB-41
tež. 0.535 kg/m'
2
5,5
22
22
Z40-660
tež. 0.179
10,5
22
Z40-656
tež. 0.215
12
22
Z40-664
tež. 0.243
15,5
22
F-0784
tež. 0.330
20,5
22
Z40-665
tež. 0.271
25,5
22
Z40-666
tež. 0.289 kg/m'
30,5
22
Z40-667
tež. 0.358 kg/m'
35,5
22
Z40-668
tež. 0.320 kg/m'
40,5
22
Z40-669
tež. 0.347 kg/m'
Z40-670
tež. 0.373 kg/m

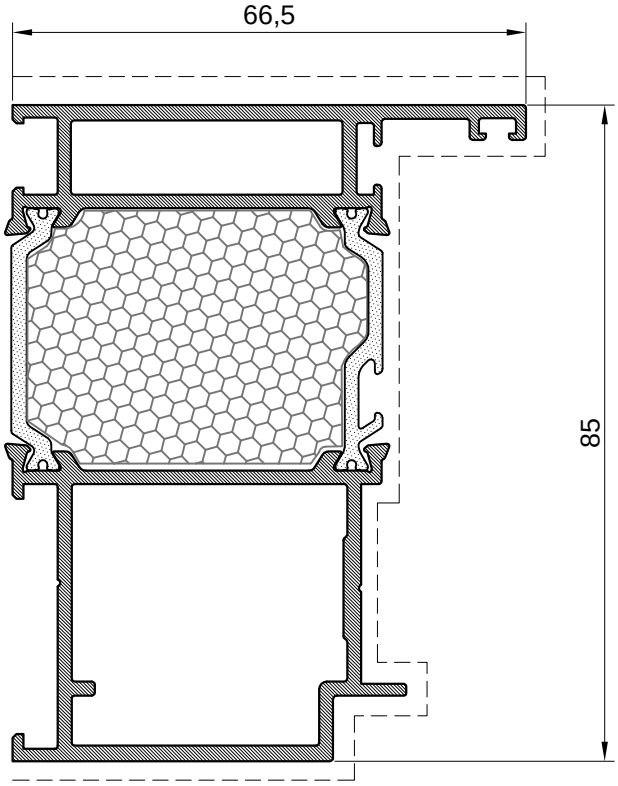

Profil rama-otvaranje unutra Profile frame-inward opening		
Art.Br. Art.No.	**FT-0551F**	
Težina Weight	kg/m'	**1.916**
Opseg Perimeter	mm	**395**
Moment inercije Moments of inertia	Ix (cm^4)	**46.01**
	Iy (cm^4)	**19.84**
	Wx (cm^3)	**13.31**
	Wy (cm^3)	**4.99**
L	mm	**6500**

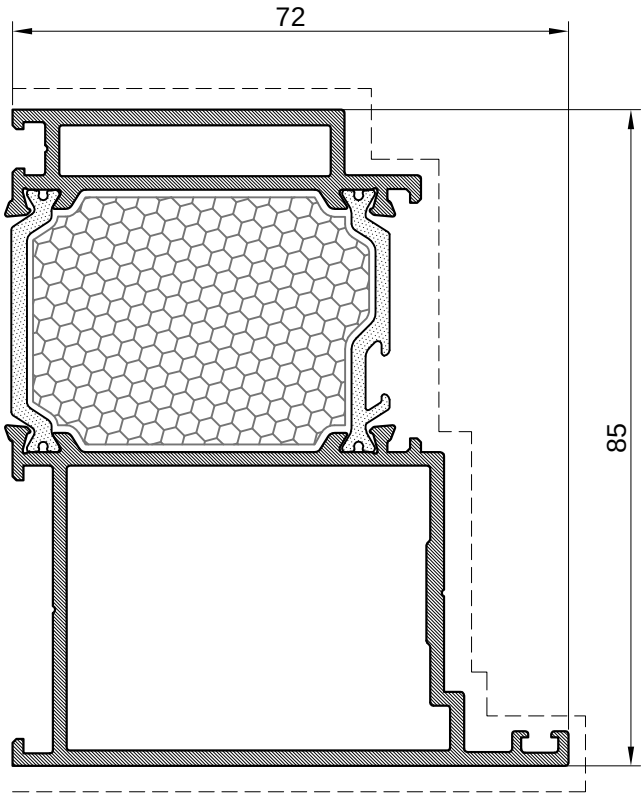

Profil rama-otvaranje vani Profile frame-outward opening		
Art.Br. Art.No.	**FT-0552F**	
Težina Weight	kg/m'	**1.995**
Opseg Perimeter	mm	**389**
Moment inercije Moments of inertia	Ix (cm^4)	**49.52**
	Iy (cm^4)	**27.17**
	Wx (cm^3)	**14.70**
	Wy (cm^3)	**6.41**
L	mm	**6500**

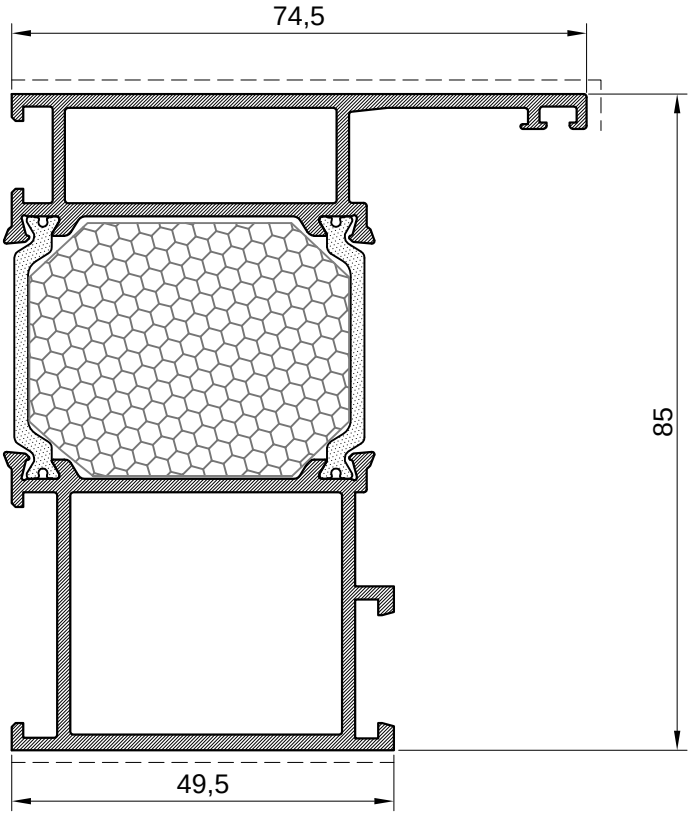

Profil rama (bočni fiksni dio +fiksno nadsvjetlo) Profile frame (fixed side and top light)		
Art.Br. Art.No.	**FT-0513F**	
Težina Weight	kg/m'	**1.884**
Opseg Perimeter	mm	**407.24**
Moment inercije Moments of inertia	Ix (cm^4)	**46.38**
	Iy (cm^4)	**22.67**
	Wx (cm^3)	**13.55**
	Wy (cm^3)	**4.85**
L	mm	**6500**

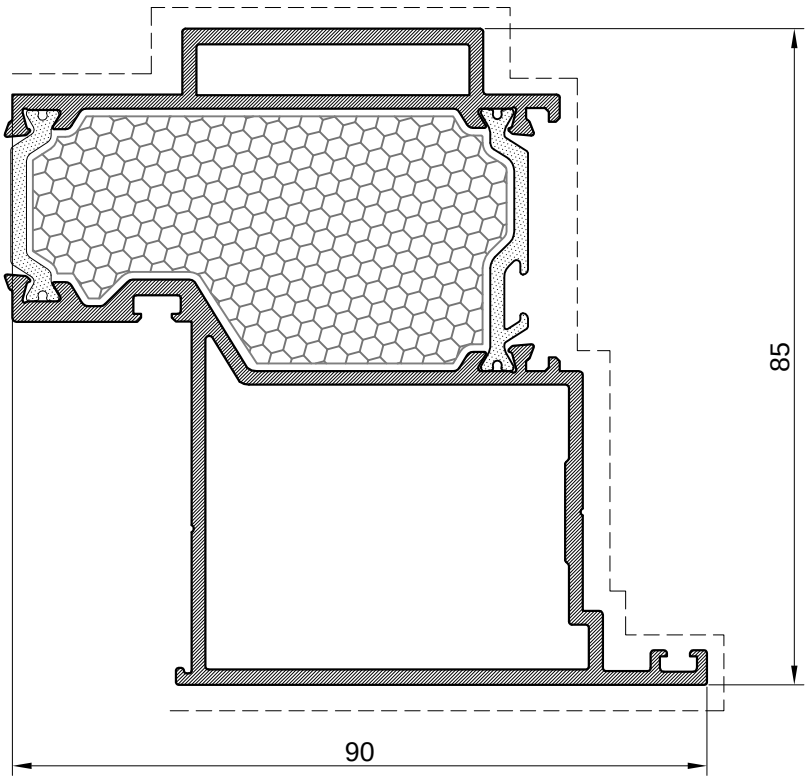

Profil rama-ugradnja u kont. fasadu (otv. vani) Profile frame-install. in curtain wall (outward opening)		
Art.Br. Art.No.	**FT-0553F**	
Težina Weight	kg/m'	**2.230**
Opseg Perimeter	mm	**412.00**
Moment inercije Moments of inertia	Ix (cm^4)	**52.69**
	Iy (cm^4)	**41.54**
	Wx (cm^3)	**15.51**
	Wy (cm^3)	**8.70**
L	mm	**6500**

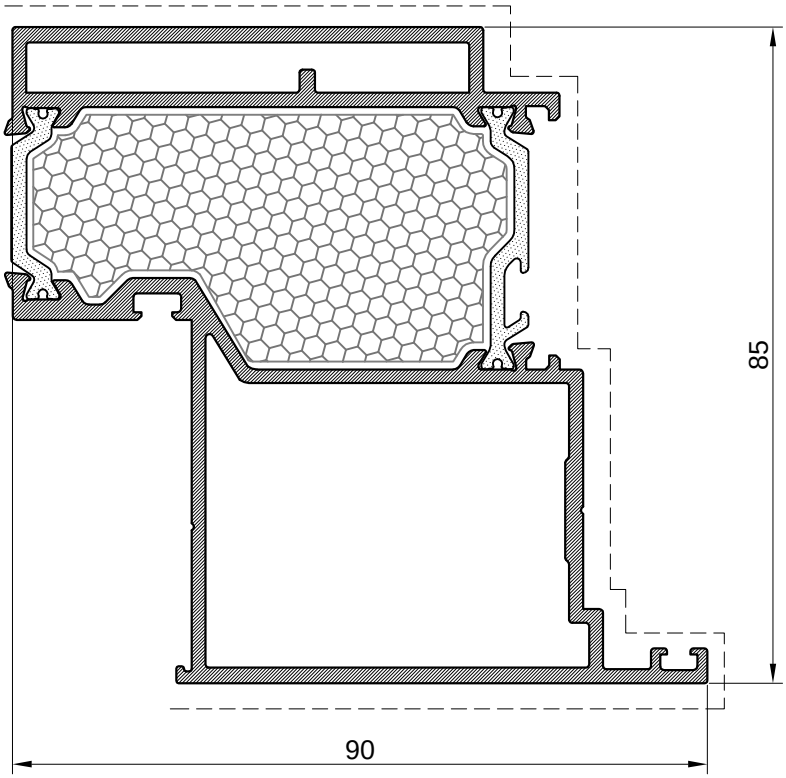

Profil rama-ugradnja u strukt. fasadu (otv. vani) Profile frame-install. in struc. facades (inward open.)		
Art.Br. Art.No.	**FT-0554F**	
Težina Weight	kg/m'	**2.374**
Opseg Perimeter	mm	**412.00**
Moment inercije Moments of inertia	Ix (cm^4)	**58.23**
	Iy (cm^4)	**47.31**
	Wx (cm^3)	**16.35**
	Wy (cm^3)	**9.50**
L	mm	**6500**

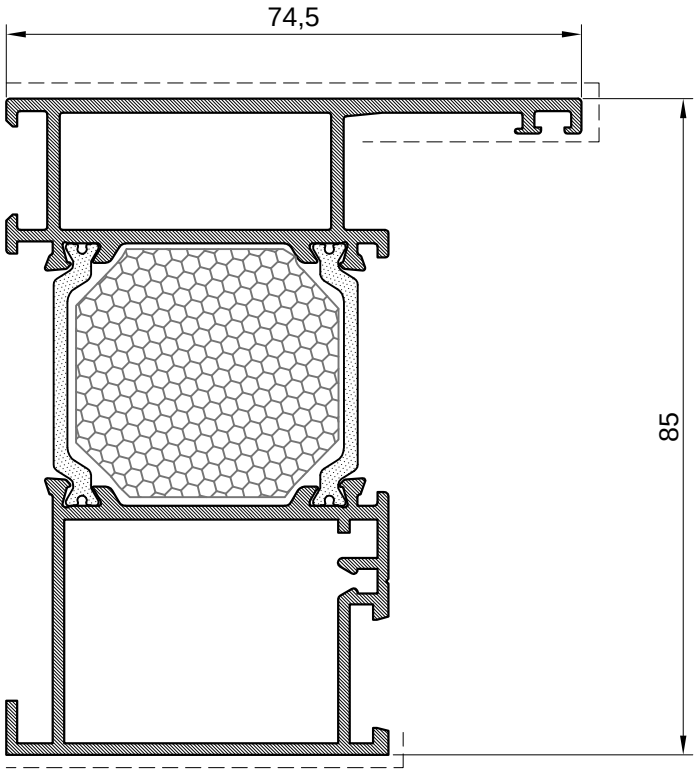

Profil rama-vrata sa otv. nadsvjetlom Profile frame-door with tilt top light		
Art.Br. Art.No.	**FT-0555F**	
Težina Weight	kg/m'	**1.850**
Opseg Perimeter	mm	**439.53**
Moment inercije Moments of inertia	Ix (cm^4)	**43.54**
	Iy (cm^4)	**21.96**
	Wx (cm^3)	**12.40**
	Wy (cm^3)	**4.87**
L	mm	**6500**

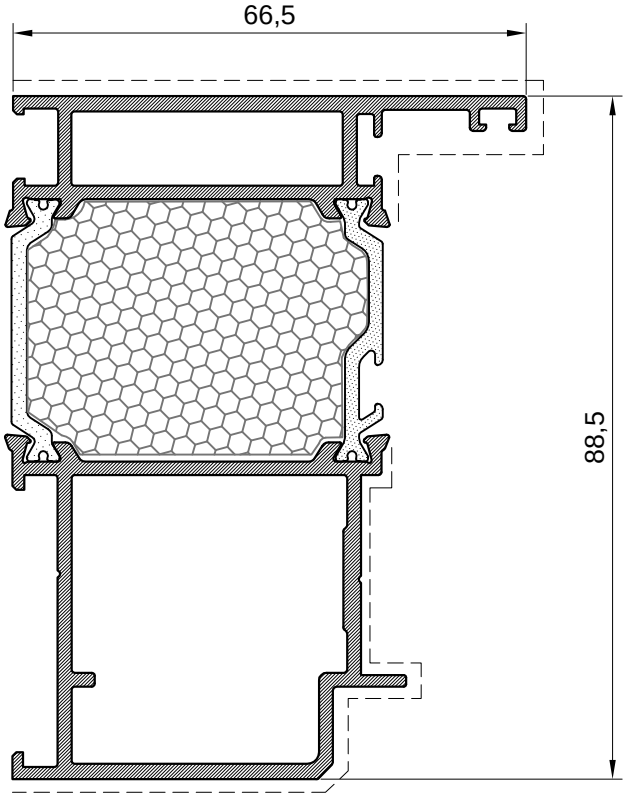

Profil rama-VP vrata sa obostrano ravnim limom Profile frame-VP door with both side hidden sash		
Art.Br. Art.No.	**FT-0556F**	
Težina Weight	kg/m'	**1.946**
Opseg Perimeter	mm	**401.75**
Moment inercije Moments of inertia	Ix (cm^4)	**49.93**
	Iy (cm^4)	**20.15**
	Wx (cm^3)	**13.71**
	Wy (cm^3)	**5.05**
L	mm	**6500**

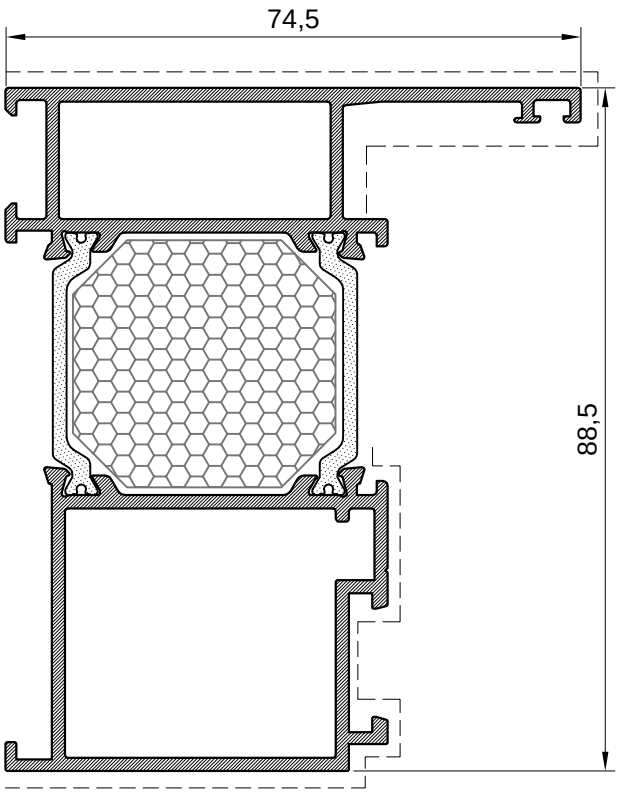

Profil rama-VP vrata sa fix. dijelom (obostrano ravnim lim) Profile frame-VP door with fix. side and top light (both side hidden sash)		
Art.Br. Art.No.	**FT-0557F**	
Težina Weight	kg/m'	**1.907**
Opseg Perimeter	mm	**419.93**
Moment inercije Moments of inertia	Ix (cm^4)	**65.79**
	Iy (cm^4)	**22.37**
	Wx (cm^3)	**13.37**
	Wy (cm^3)	**4.97**
L	mm	**6500**

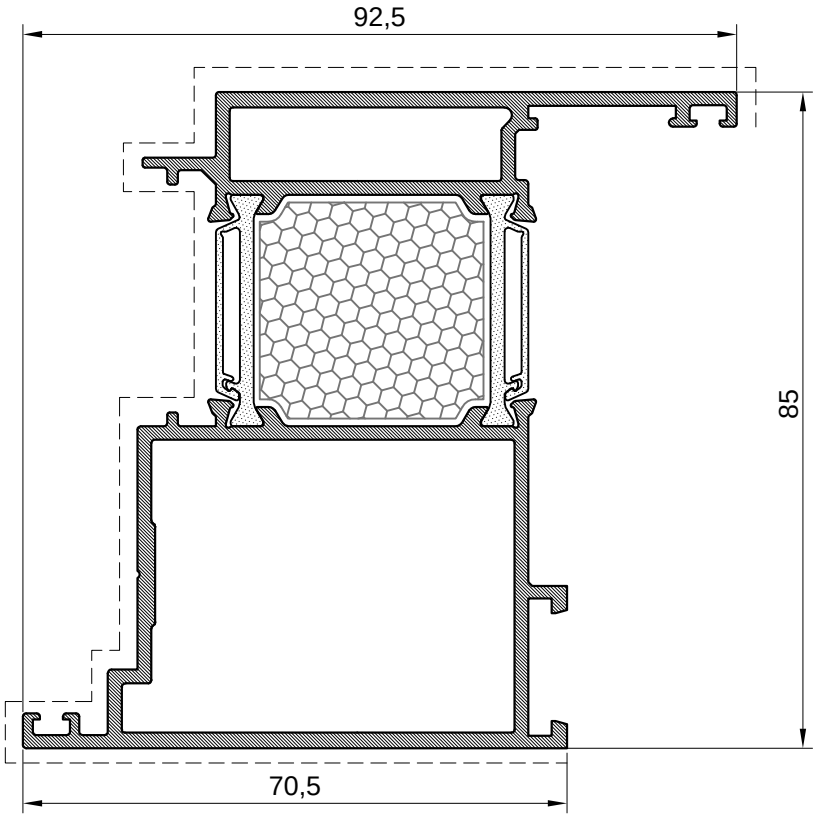

Profil krila-otvaranje unutra (brava 35 mm) Profile sash-inward opening (lock-backset 35 mm)		
Art.Br. Art.No.	**FT-0561F**	
Težina Weight	kg/m'	**2.175**
Opseg Perimeter	mm	**448.00**
Moment inercije Moments of inertia	Ix (cm^4)	**55.94**
	Iy (cm^4)	**34.79**
	Wx (cm^3)	**16.99**
	Wy (cm^3)	**7.09**
L	mm	**6500**

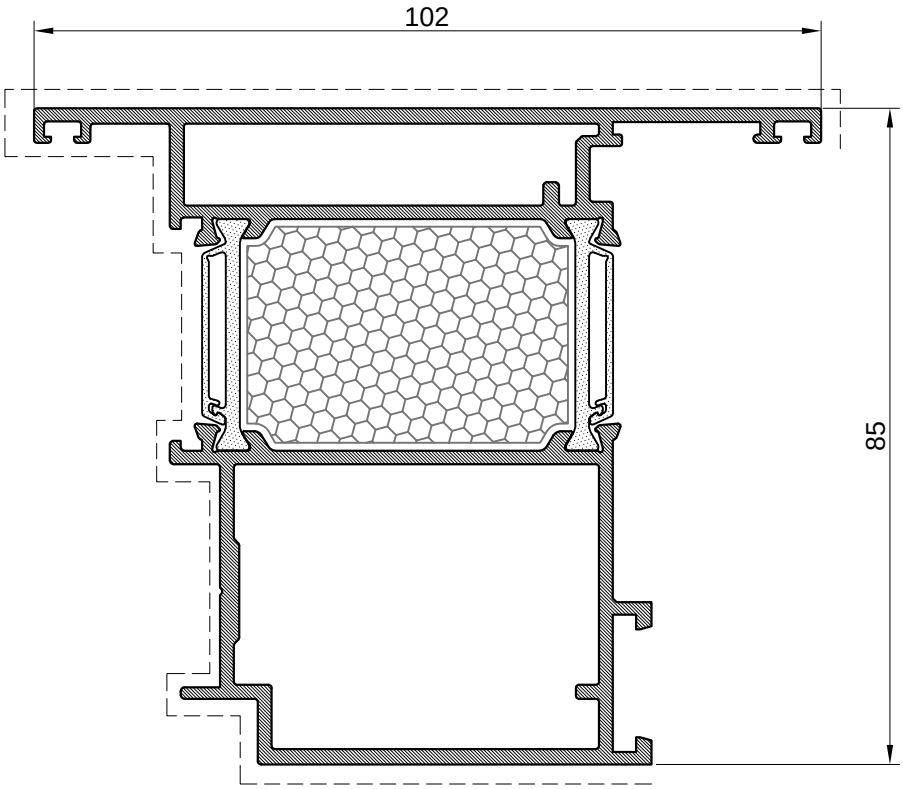

Profil krila-otvaranje vani (brava 35 mm) Profile sash-outward opening (lock-backset 35 mm)		
Art.Br. Art.No.	**FT-0562F**	
Težina Weight	kg/m'	**2.399**
Opseg Perimeter	mm	**465.00**
Moment inercije Moments of inertia	Ix (cm^4)	**58.73**
	Iy (cm^4)	**45.81**
	Wx (cm^3)	**15.88**
	Wy (cm^3)	**8.74**
L	mm	**6500**

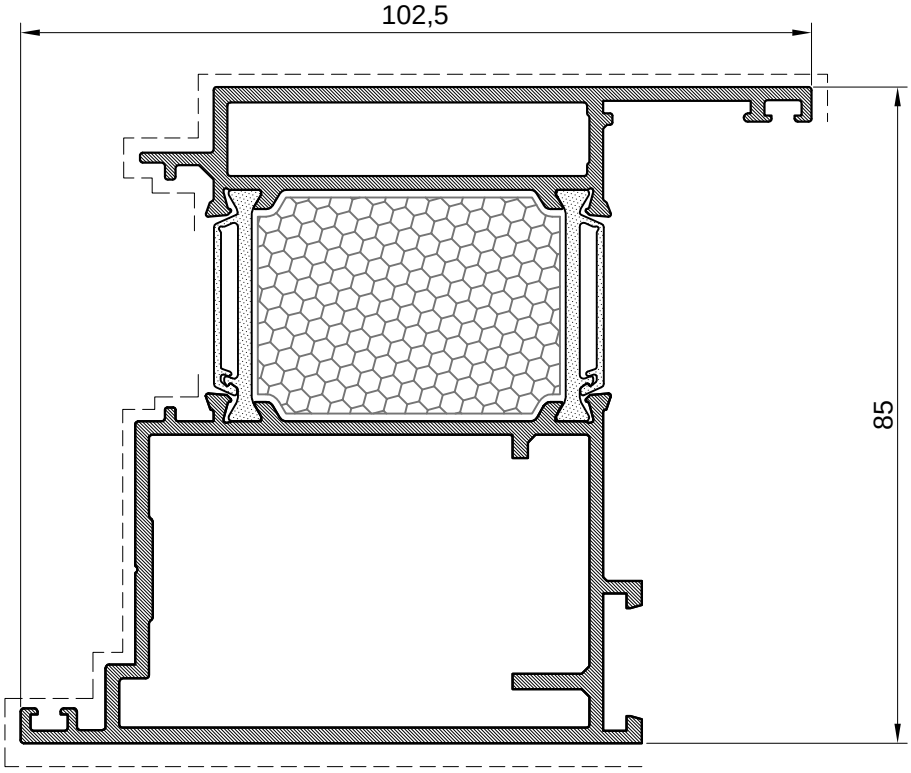

Profil krila-otvaranje unutra (brava 45 mm) Profile sash-inward opening (lock-backset 45 mm)		
Art.Br. Art.No.	**FT-0563F**	
Težina Weight	kg/m'	**2.445**
Opseg Perimeter	mm	**459.40**
Moment inercije Moments of inertia	Ix (cm^4)	**64.08**
	Iy (cm^4)	**51.51**
	Wx (cm^3)	**19.67**
	Wy (cm^3)	**9.65**
L	mm	**6500**

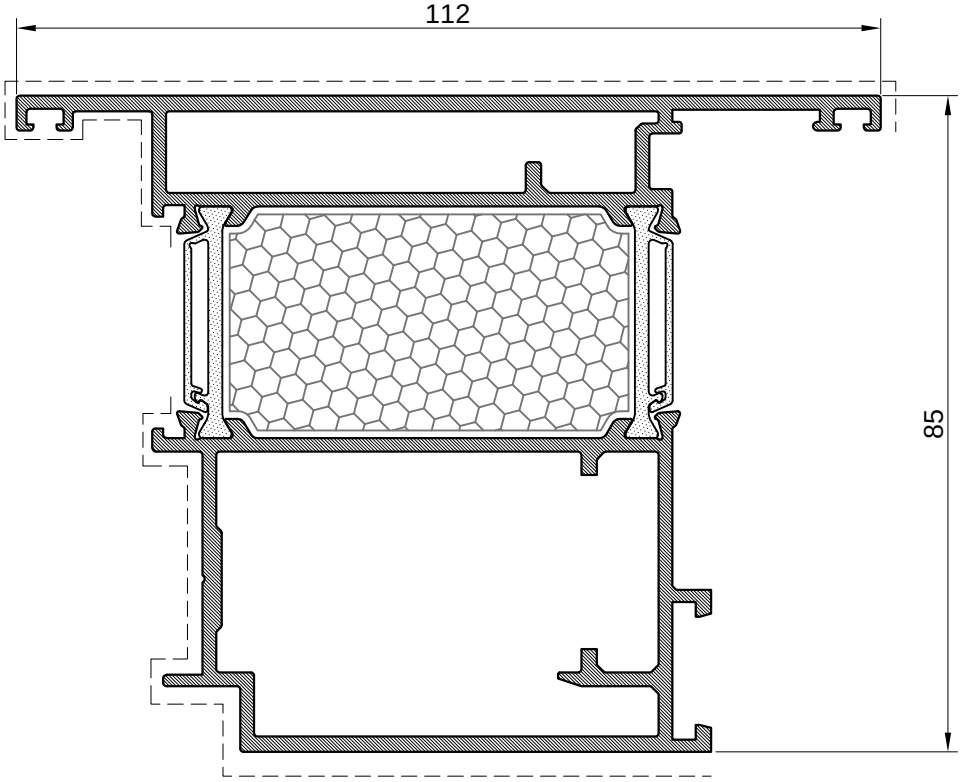

Profil krila-otvaranje vani (brava 45 mm) Profile sash-outward opening (lock-backset 45 mm)		
Art.Br. Art.No.	**FT-0564F**	
Težina Weight	kg/m'	**2.681**
Opseg Perimeter	mm	**127.70**
Moment inercije Moments of inertia	Ix (cm^4)	**67.73**
	Iy (cm^4)	**65.92**
	Wx (cm^3)	**18.73**
	Wy (cm^3)	**11.62**
L	mm	**6500**

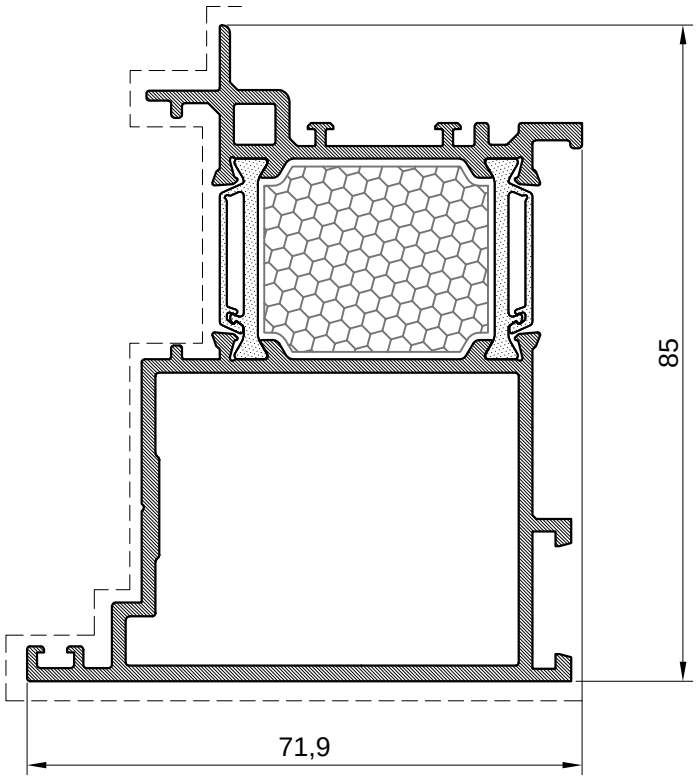

Profil krila-VP vrata (brava 35 mm) Profile sash-VP door (lock-backset 35 mm)		
Art.Br. Art.No.	**FT-0591F**	
Težina Weight	kg/m'	**1.885**
Opseg Perimeter	mm	**409.40**
Moment inercije Moments of inertia	Ix (cm^4)	**37.62**
	Iy (cm^4)	**25.37**
	Wx (cm^3)	**9.81**
	Wy (cm^3)	**6.43**
L	mm	**6500**

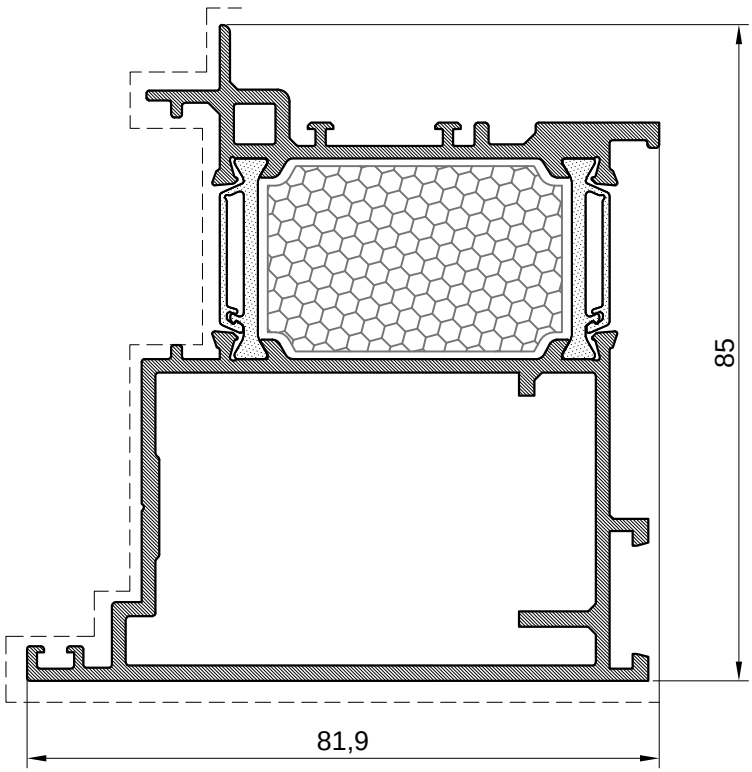

Profil krila-VP vrata (brava 45 mm) Profile sash-VP door (lock-backset 45 mm)		
Art.Br. Art.No.	**FT-0592F**	
Težina Weight	kg/m'	**2.166**
Opseg Perimeter	mm	**443.8**
Moment inercije Moments of inertia	Ix (cm^4)	**44.30**
	Iy (cm^4)	**40.69**
	Wx (cm^3)	**11.64**
	Wy (cm^3)	**8.90**
L	mm	**6500**

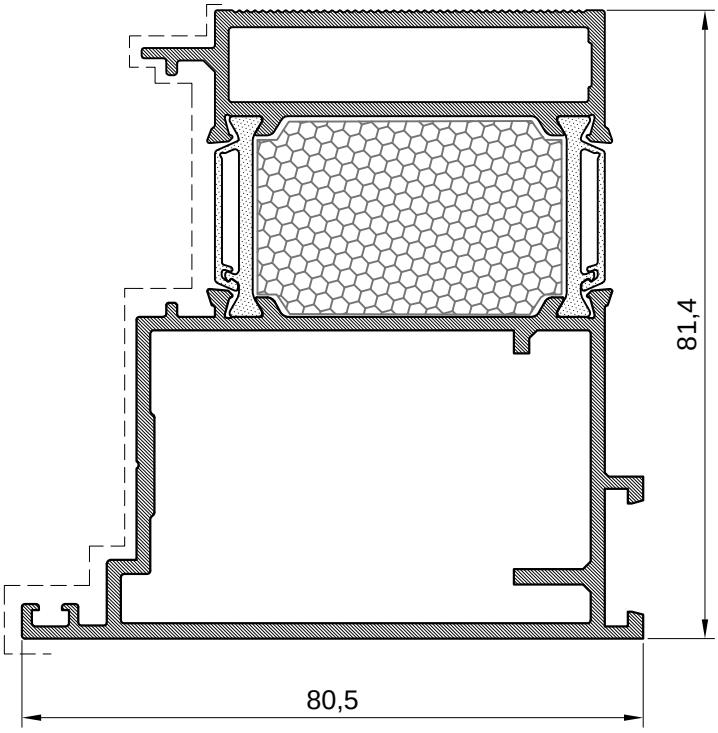

Profil krila-VP vrata (obostrano ravni lim) Profile sash-VP door (both side hidden sash)		
Art.Br. Art.No.	**FT-0593F**	
Težina Weight	kg/m'	**2.268**
Opseg Perimeter	mm	**391.52**
Moment inercije Moments of inertia	Ix (cm^4)	**52.10**
	Iy (cm^4)	**40.27**
	Wx (cm^3)	**15.98**
	Wy (cm^3)	**8.77**
L	mm	**6500**

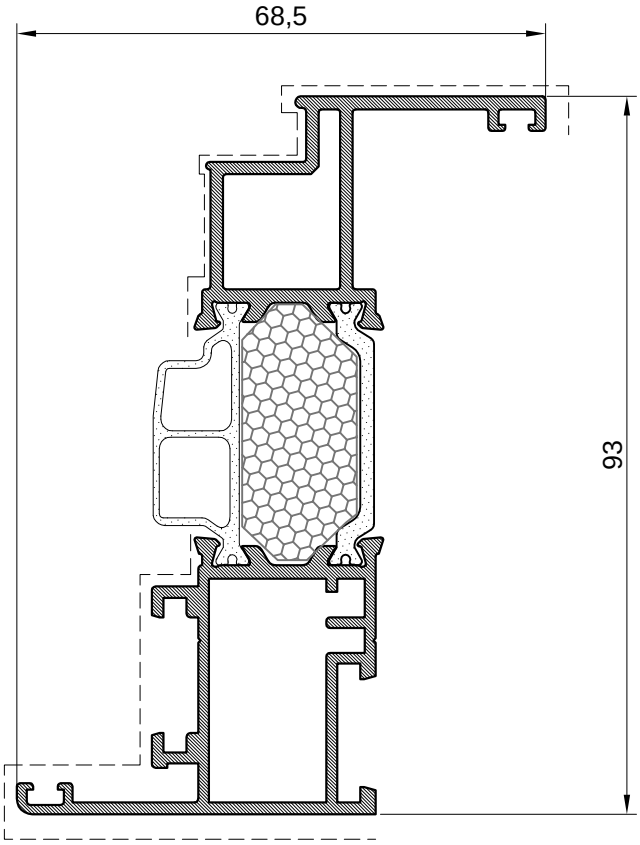

Profil krila-otvarajuće nadsvjetlo Profile sash-tilt top light		
Art.Br. Art.No.	**FT-0565F**	
Težina Weight	kg/m'	**1.583**
Opseg Perimeter	mm	**439.96**
Moment inercije Moments of inertia	Ix (cm^4)	**41.73**
	Iy (cm^4)	**8.44**
	Wx (cm^3)	**11.65**
	Wy (cm^3)	**2.43**
L	mm	**6500**

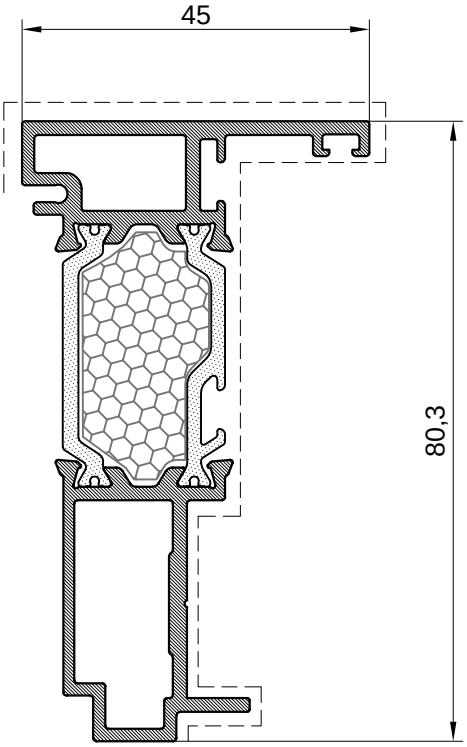

Profil kombatute-otv.unutra Flying mullion inward opening		
Art.Br. Art.No.	**FT-0571F**	
Težina Weight	kg/m'	**1.33**
Opseg Perimeter	mm	**318.45**
Moment inercije Moments of inertia	Ix (cm^4)	**25.36**
	Iy (cm^4)	**4.07**
	Wx (cm^3)	**7.45**
	Wy (cm^3)	**1.45**
L	mm	**6500**

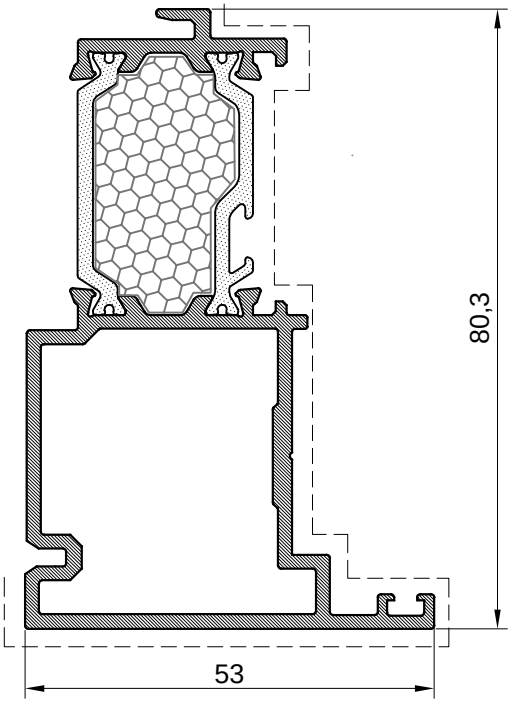

Profil kombatute-otv.vani Flying mullion outward opening		
Art.Br. Art.No.	**FT-0572F**	
Težina Weight	kg/m'	**1.472**
Opseg Perimeter	mm	**333.00**
Moment inercije Moments of inertia	Ix (cm^4)	**25.65**
	Iy (cm^4)	**9.24**
	Wx (cm^3)	**6.50**
	Wy (cm^3)	**2.90**
L	mm	**6500**

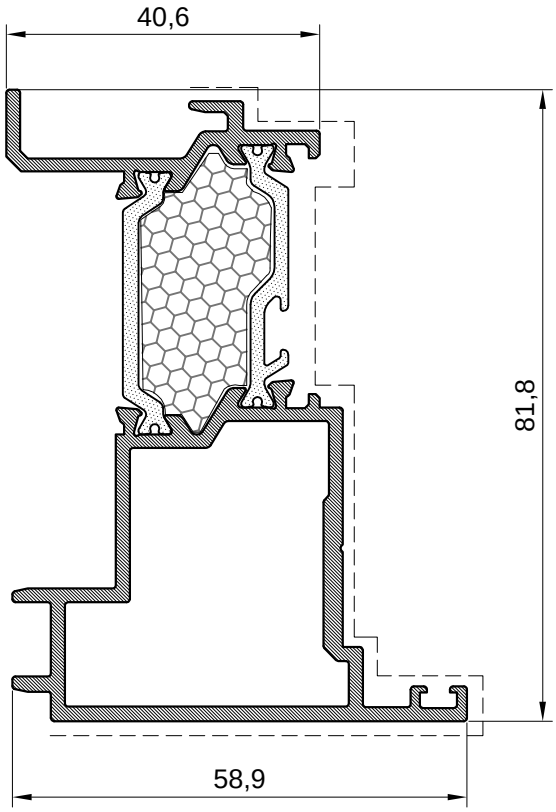

Umetak rama-otvaranje vani Frame add. profile-outward opening		
Art.Br. Art.No.	**FT-0573F**	
Težina Weight	kg/m'	**1.568**
Opseg Perimeter	mm	**400.49**
Moment inercije Moments of inertia	Ix (cm^4)	**30.12**
	Iy (cm^4)	**11.53**
	Wx (cm^3)	**7.99**
	Wy (cm^3)	**3.48**
L	mm	**6500**

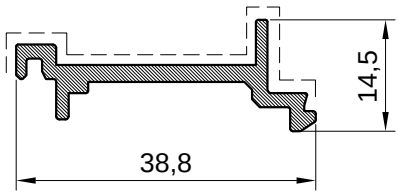

Umetak rama-otvaranje unutra Frame add. profile-inward opening		
Art.Br. Art.No.	**F-1222**	
Težina Weight	kg/m'	**0.327**
Opseg Perimeter	mm	**121.95**
L	mm	**6500**

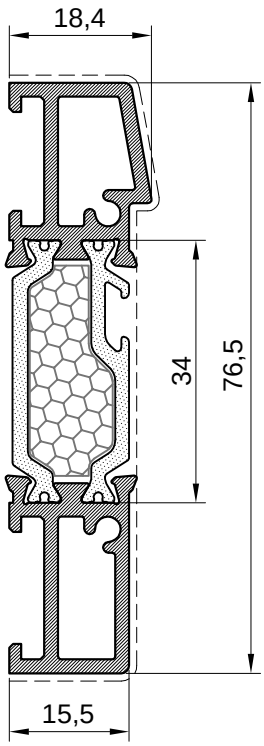

Profil praga-otvaranje unutra Threshold profile - inward openning		
Art.Br. Art.No.	**FT-0584F**	
Težina Weight	kg/m'	**1.06**
Opseg Perimeter	mm	**239**
Moment inercije Moments of inertia	Ix (cm^4)	**16.32**
	Iy (cm^4)	**0.84**
	Wx (cm^3)	**5.79**
	Wy (cm^3)	**0.86**
L	mm	**6500**

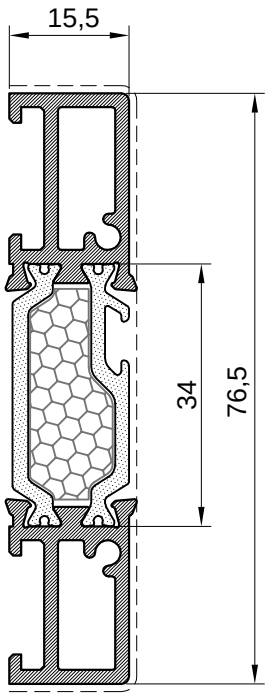

Profil praga-otvaranje vani Threshold profile - outward openning		
Art.Br. Art.Nr.	**FT-0585F**	
Težina Weight	kg/m'	**1.04**
Opseg Perimeter	mm	**231.15**
Moment inercije Moments of inertia	Ix (cm^4)	**16.04**
	Iy (cm^4)	**0.74**
	Wx (cm^3)	**5.75**
	Wy (cm^3)	**0.82**
L	mm	**6500**

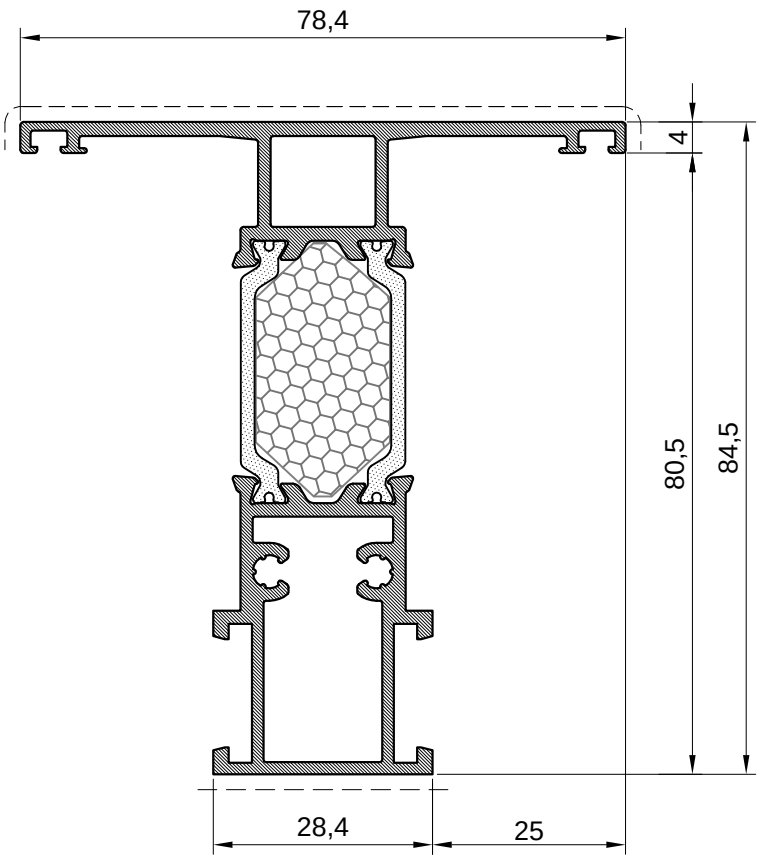

Profil prečke Transom profile		
Art.Br. Art.No.	**FT-0574F**	
Težina Weight	kg/m'	**1.65**
Opseg Perimeter	mm	**410.37**
Moment inercije Moments of inertia	Ix (cm^4)	**37.64**
	Iy (cm^4)	**11.04**
	Wx (cm^3)	**10.69**
	Wy (cm^3)	**2.82**
L	mm	**6500**

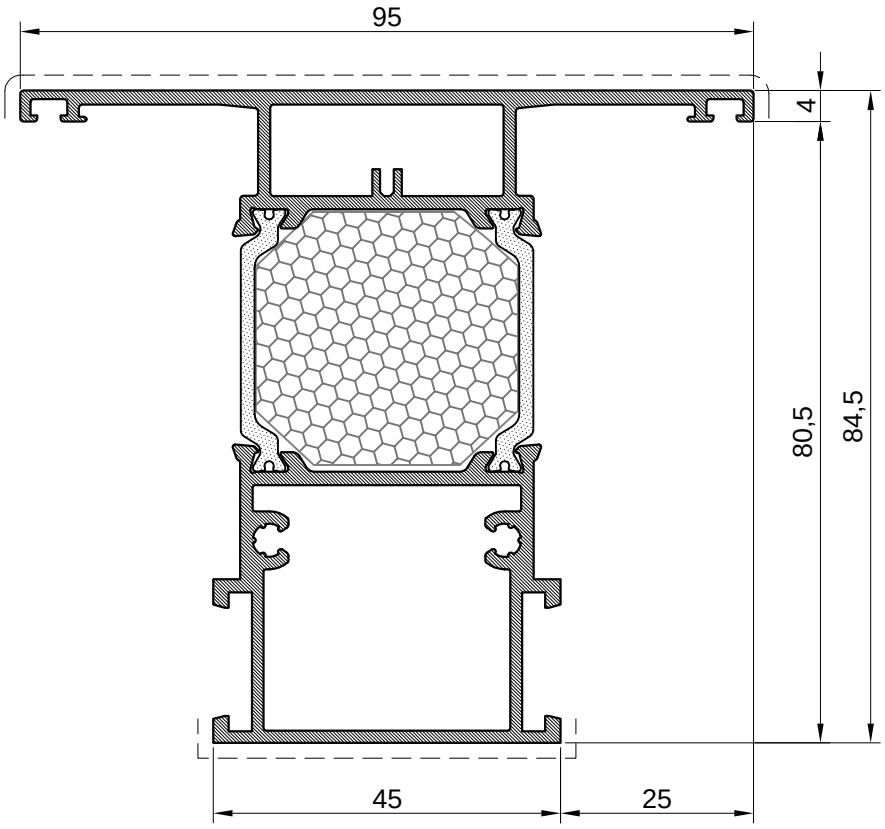

Profil prečke Transom profile		
Art.Br. Art.No.	**FT-0575F**	
Težina Weight	kg/m'	**1.970**
Opseg Perimeter	mm	**443.53**
Moment inercije Moments of inertia	Ix (cm^4)	**46.60**
	Iy (cm^4)	**25.03**
	Wx (cm^3)	**13.11**
	Wy (cm^3)	**5.27**
L	mm	**6500**

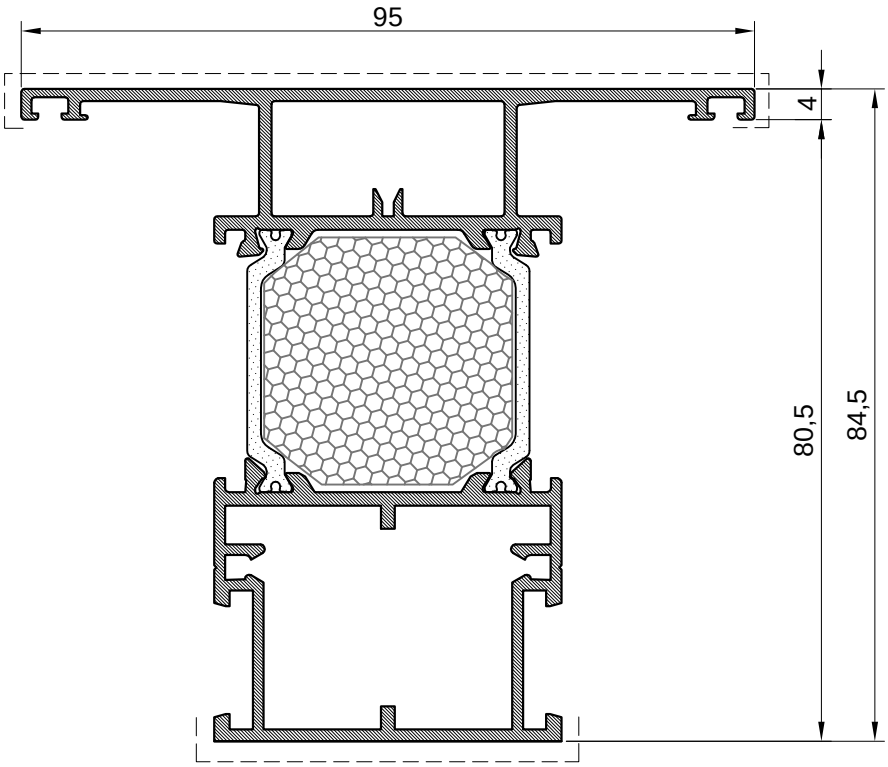

Profil prečke-otvarajuće nadsvjetlo Transom profile-tilt top light		
Art.Br. Art.No.	**FT-0577F**	
Težina Weight	kg/m'	**1.940**
Opseg Perimeter	mm	**498.22**
Moment inercije Moments of inertia	Ix (cm^4)	**44.91**
	Iy (cm^4)	**25.18**
	Wx (cm^3)	**12.63**
	Wy (cm^3)	**5.30**
L	mm	**6500**

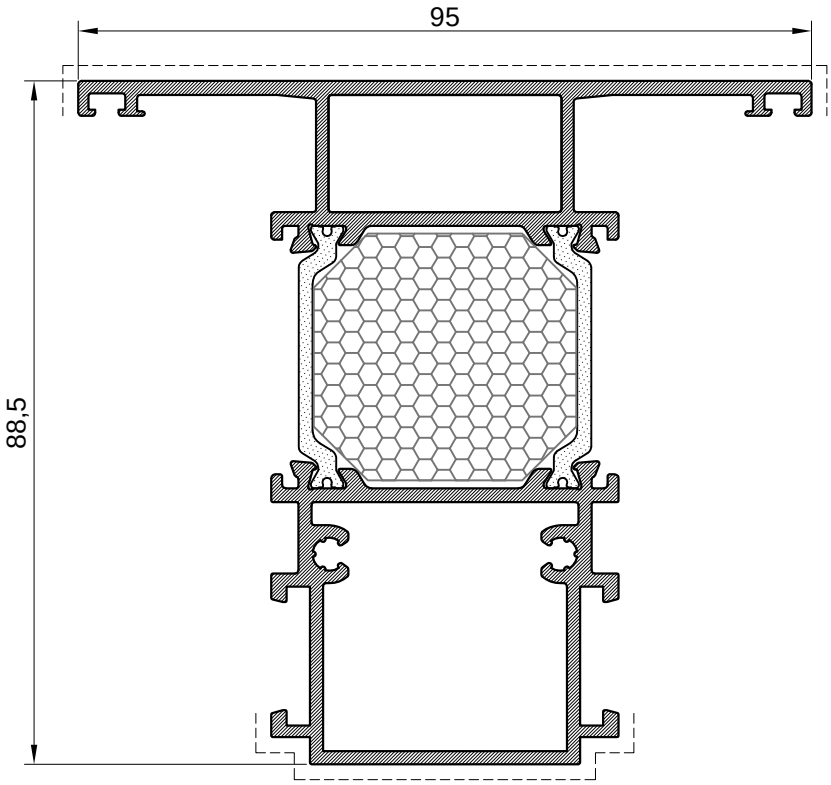

Profil prečke-VP vrata obostrano ravni lim Transom profile-VP door both side hidden sash		
Art.Br. Art.Nr.	**FT-0580F**	
Težina Weight	kg/m'	**2.130**
Opseg Perimeter	mm	**493.70**
Moment inercije Moments of inertia	Ix (cm4)	**53.30**
	Iy (cm4)	**28.44**
	Wx (cm3)	**14.38**
	Wy (cm3)	**5.99**
L	mm	**6500**

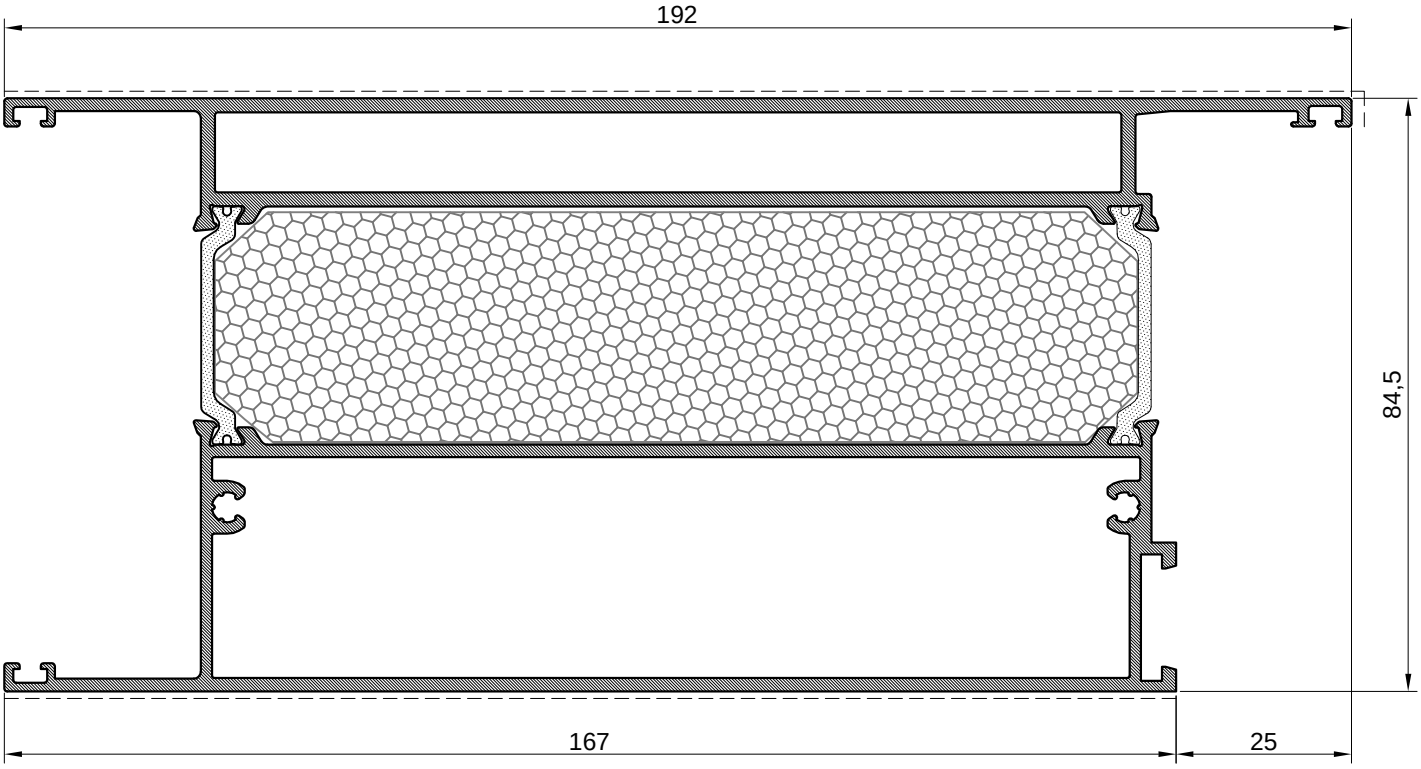

Parapetna prečka Transom-bottom sash and frame profile		
Art.Br. Art.No.	**FT-0576F**	
Težina Weight	kg/m'	**4.15**
Opseg Perimeter	mm	**675.23**
Moment inercije Moments of inertia	Ix (cm^4)	**114.34**
	Iy (cm^4)	**383.10**
	Wx (cm^3)	**32.90**
	Wy (cm^3)	**39.01**
L	mm	**6500**

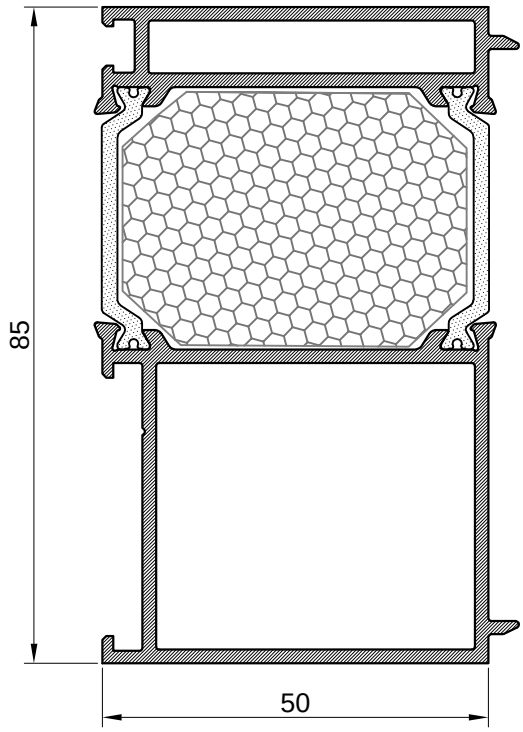

Profil proširenja rama Profile extension frame		
Art.Br. Art.No.	**FT-0578F**	
Težina Weight	kg/m'	**1.749**
Opseg Perimeter	mm	**309**
Moment inercije Moments of inertia	Ix (cm^4)	**41.85**
	Iy (cm^4)	**18.21**
	Wx (cm^3)	**12.32**
	Wy (cm^3)	**6.50**
L	mm	**6500**

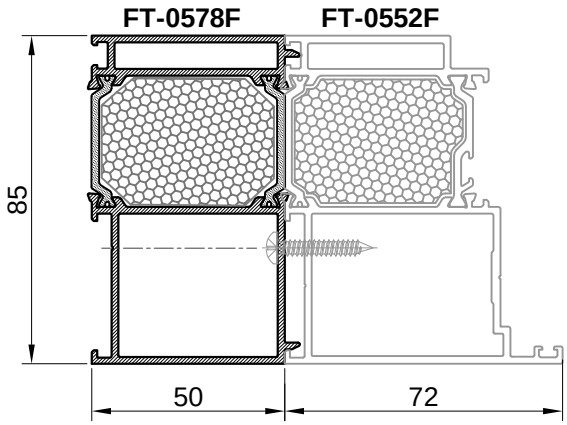

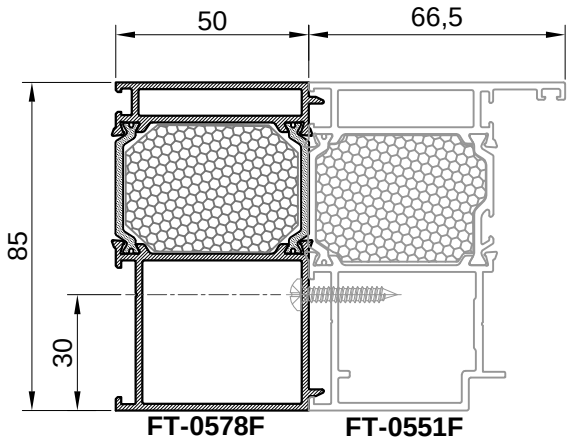

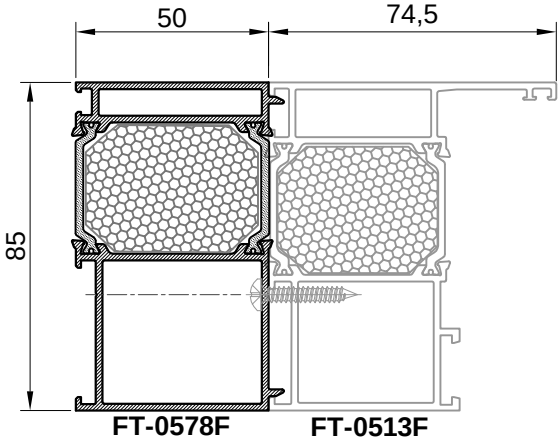

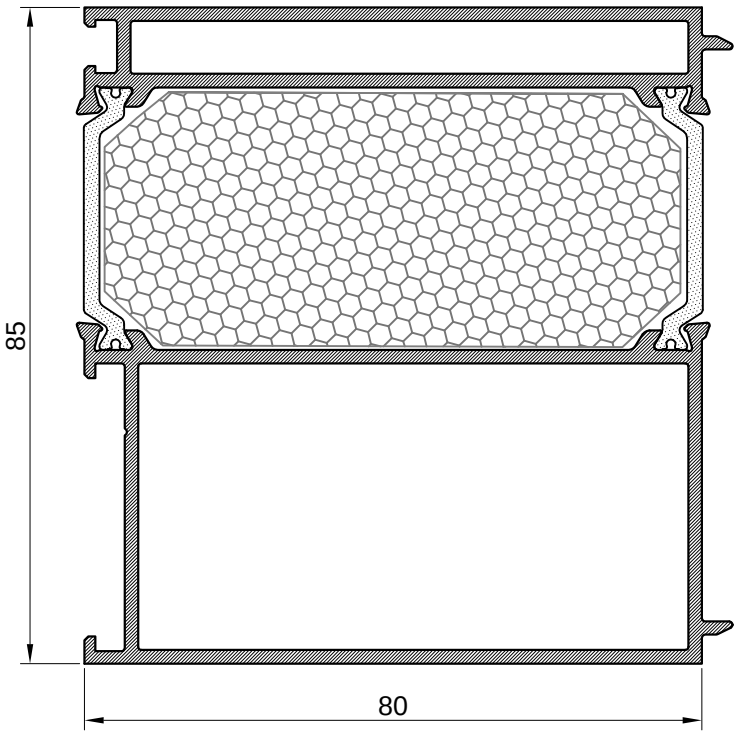

Profil proširenja rama Profile extension frame		
Art.Br. Art.No.	**FT-0579F**	
Težina Weight	kg/m'	**2.317**
Opseg Perimeter	mm	**369.00**
Moment inercije Moments of inertia	Ix (cm^4)	**59.31**
	Iy (cm^4)	**60.58**
	Wx (cm^3)	**16.95**
	Wy (cm^3)	**14.03**
L	mm	**6500**

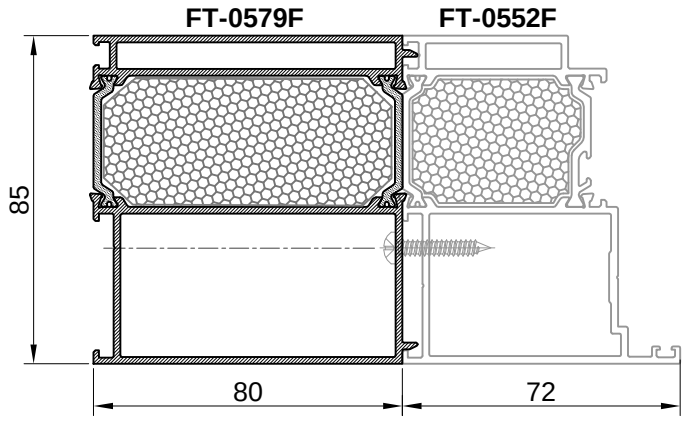

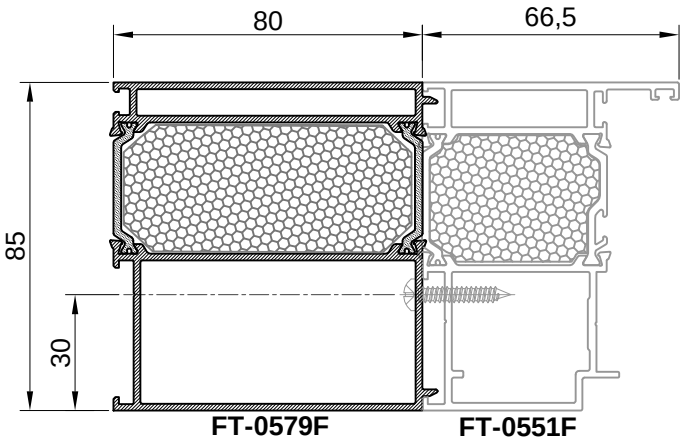

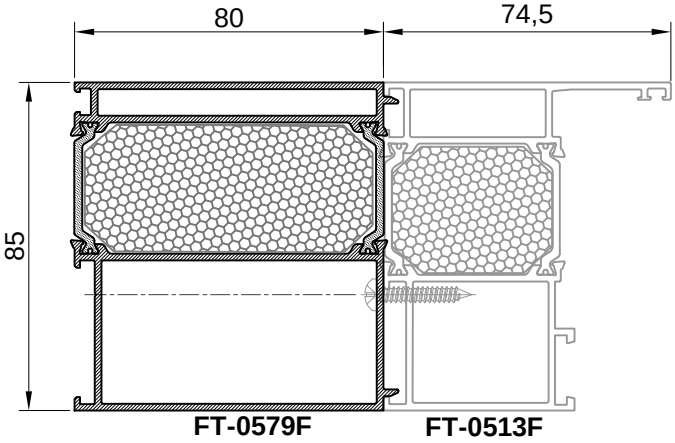

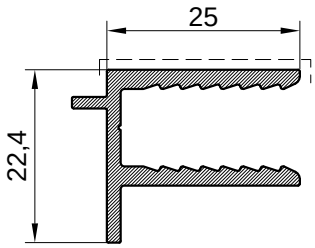

Al profil Al profile		
Art.Br. Art.No.	**F-1232**	
Težina Weight	kg/m'	**0.405**
Opseg Perimeter	mm	**153.39**
L	mm	**6500**

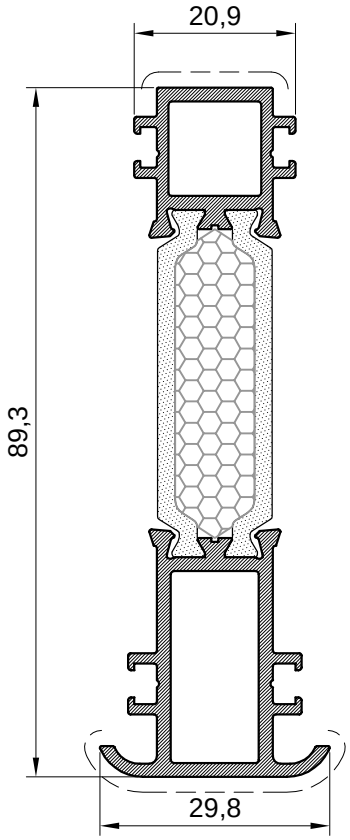

Al profil Al profile		
Art.Br. Art.No.	**FT-0540F**	
Težina Weight	kg/m'	**1.190**
Opseg Perimeter	mm	**308.71**
Moment inercije Moments of inertia	Ix (cm4)	**27.51**
	Iy (cm4)	**1.60**
	Wx (cm3)	**7.56**
	Wy (cm3)	**1.07**
L	mm	**6500**

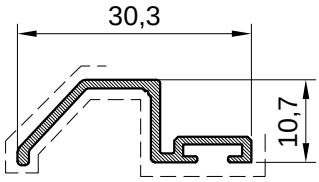

Al profil-okapnica Al profile-drip cap		
Art.Br. Art.No.	**F-1200**	
Težina Weight	kg/m'	**0.160**
Opseg Perimeter	mm	**105.74**
L	mm	**6500**

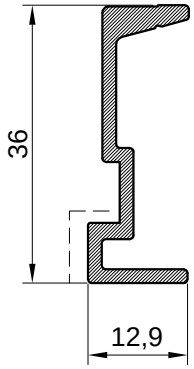

Al profil Al profile		
Art.Br. Art.No.	**F-1223**	
Težina Weight	kg/m'	**0.337**
Opseg Perimeter	mm	**124.45**
L	mm	**6500**

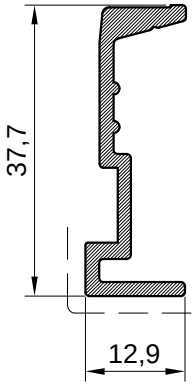

Al profil Al profile		
Art.Br. Art.No.	**F-1486**	
Težina Weight	kg/m'	**0.345**
Opseg Perimeter	mm	**129.43**
L	mm	**6500**

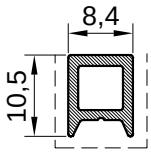

Al profil Al profile		
Art.Br. Art.No.	**F-1188**	
Težina Weight	kg/m'	**0.114**
Opseg Perimeter	mm	**40.1**
L	mm	**6500**

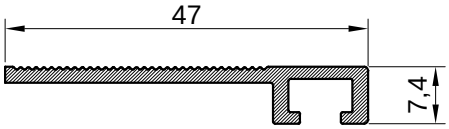

Al profil Al profile		
Art.Br. Art.No.	**F-1093**	
Težina Weight	kg/m'	**0.313**
Opseg Perimeter	mm	**132.00**
L	mm	**6500**

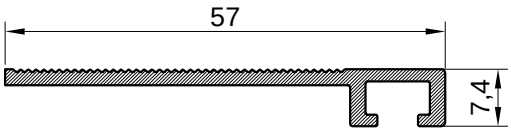

Al profil Al profile		
Art.Br. Art.No.	**F-1205**	
Težina Weight	kg/m'	**0.354**
Opseg Perimeter	mm	**154.74**
L	mm	**6500**

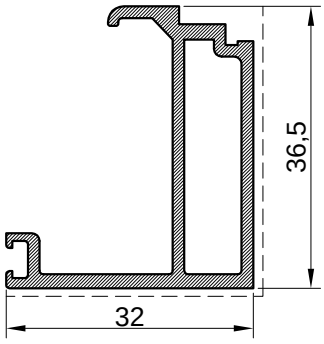

Al profil Al profile		
Art.Br. Art.No.	**FB-41**	
Težina Weight	kg/m'	**0.535**
Opseg Perimeter	mm	**172.00**
L	mm	**6500**

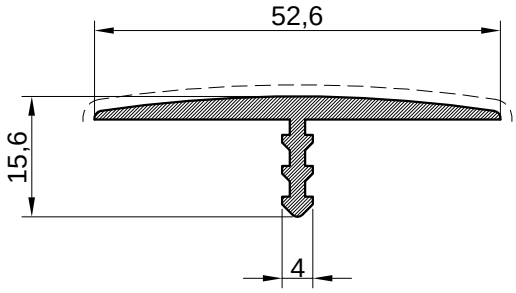

Al profil Al profile		
Art.Br. Art.No.	**F-0978**	
Težina Weight	kg/m'	**0.420**
Opseg Perimeter	mm	**140.00**
L	mm	**6500**

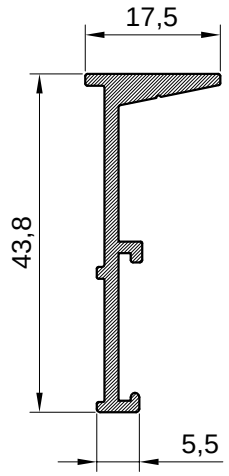

Al profil Al profile		
Art.Br. Art.No.	**F-1543**	
Težina Weight	kg/m'	**0.359**
Opseg Perimeter	mm	**138.25**
L	mm	**6500**

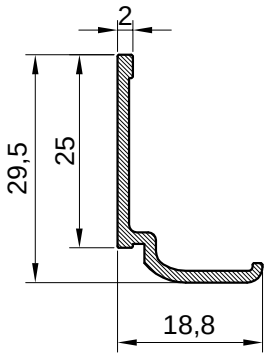

Al profil Al profile		
Art.Br. Art.No.	**F-1544**	
Težina Weight	kg/m'	**0.192**
Opseg Perimeter	mm	**95.02**
L	mm	**6500**

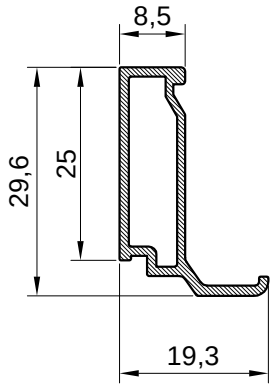

Al profil Al profile		
Art.Br. Art.No.	**F-1545**	
Težina Weight	kg/m'	**0.255**
Opseg Perimeter	mm	**98.23**
L	mm	**6500**

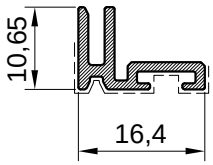

Al profil Al profile		
Art.Br. Art.No.	**F-1596**	
Težina Weight	kg/m'	**0.142**
Opseg Perimeter	mm	**84.47**
L	mm	**6500**

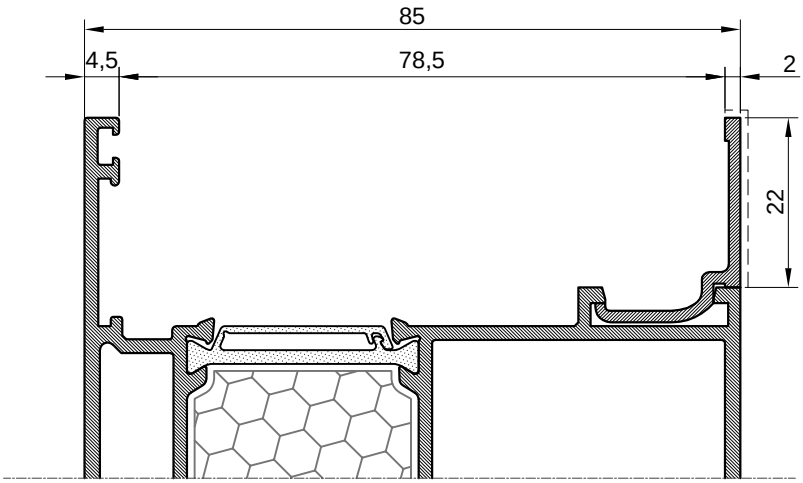

Staklo lajsna Glazing bead		
Art.Br. Art.No.	**Z40-660**	
Težina Weight	kg/m'	**0.179**
Opseg Perimeter	mm	**89.00**
L	mm	**6500**

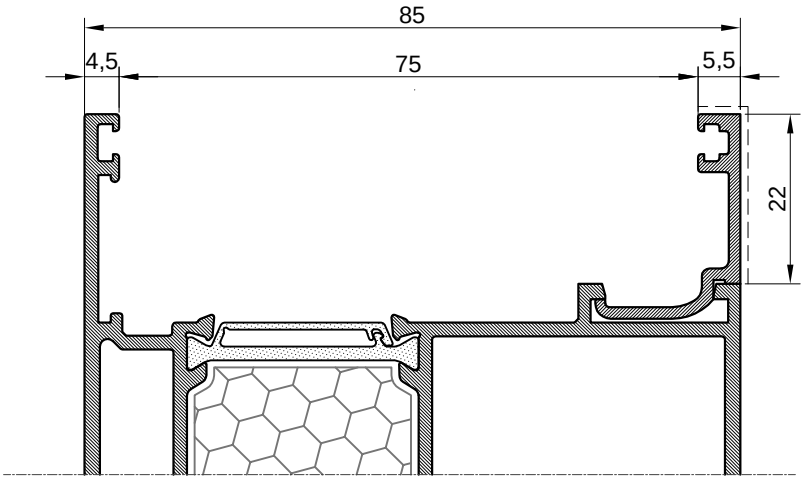

Staklo lajsna Glazing bead		
Art.Br. Art.No.	**Z40-656**	
Težina Weight	kg/m'	**0.215**
Opseg Perimeter	mm	**107.00**
L	mm	**6500**

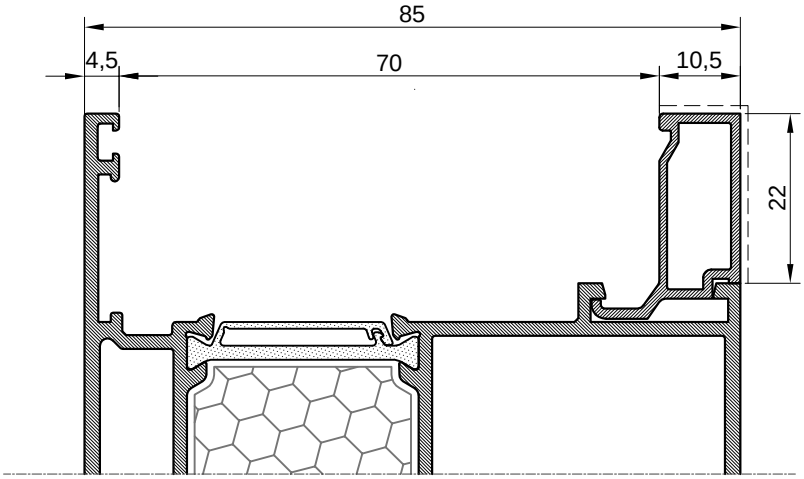

Staklo lajsna Glazing bead		
Art.Br. Art.No.	**Z40-664**	
Težina Weight	kg/m'	**0.243**
Opseg Perimeter	mm	**93.00**
L	mm	**6500**

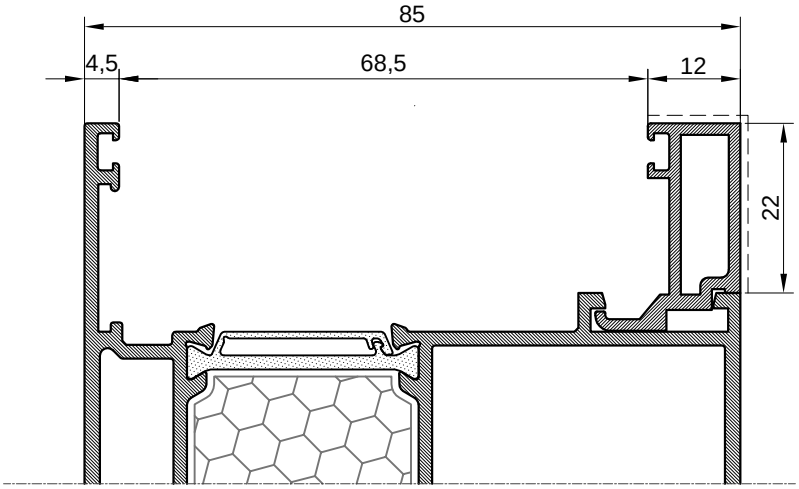

Staklo lajsna Glazing bead		
Art.Br. Art.No.	**F-0784**	
Težina Weight	kg/m'	**0.330**
Opseg Perimeter	mm	**105.40**
L	mm	**6500**

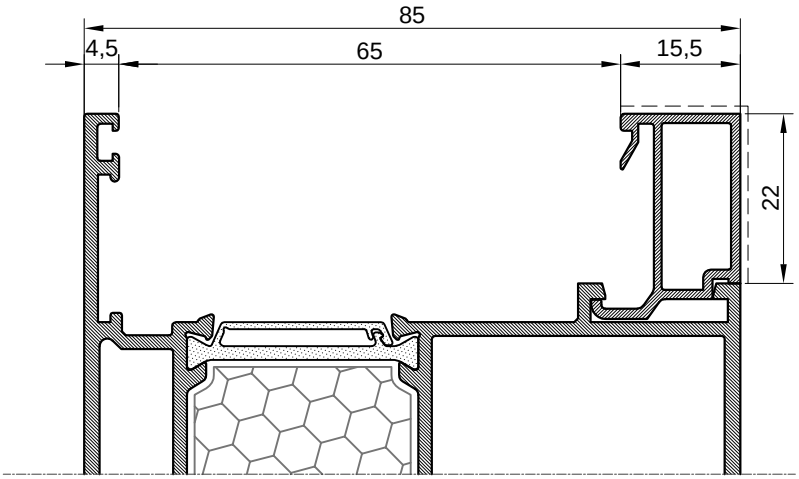

Staklo lajsna Glazing bead		
Art.Br. Art.No.	**Z40-665**	
Težina Weight	kg/m'	**0.271**
Opseg Perimeter	mm	**112.00**
L	mm	**6500**

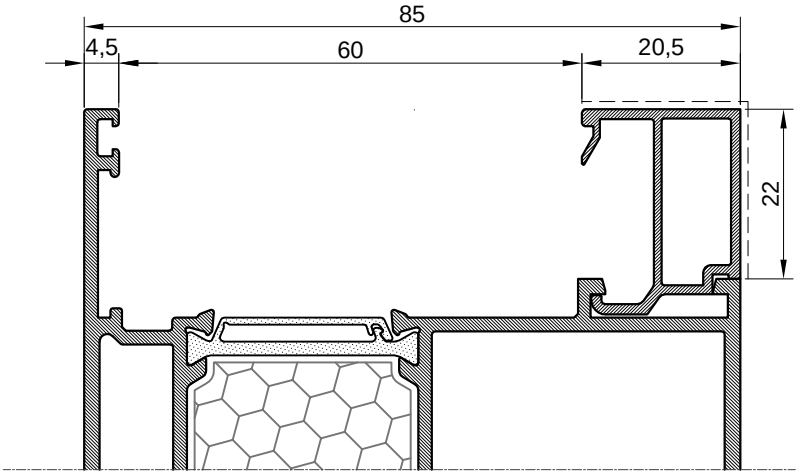

Staklo lajsna Glazing bead		
Art.Br. Art.No.	**Z40-666**	
Težina Weight	kg/m'	**0.289**
Opseg Perimeter	mm	**122.00**
L	mm	**6500**

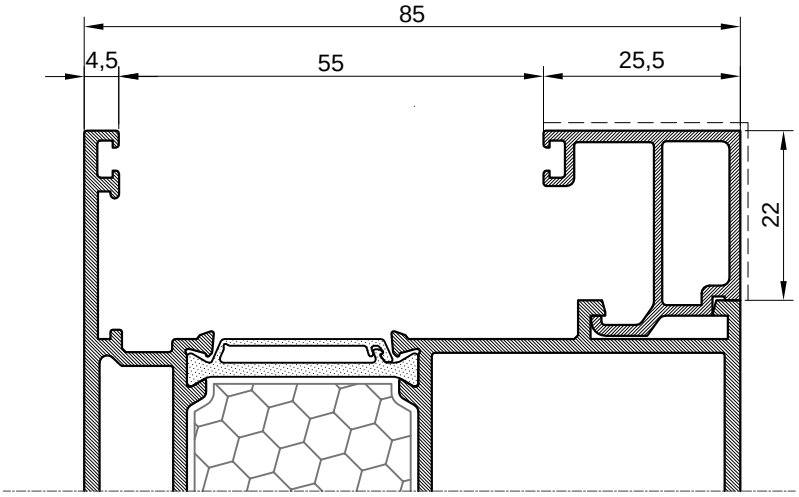

Staklo lajsna Glazing bead		
Art.Br. Art.No.	**Z40-667**	
Težina Weight	kg/m'	**0.358**
Opseg Perimeter	mm	**139.00**
L	mm	**6500**

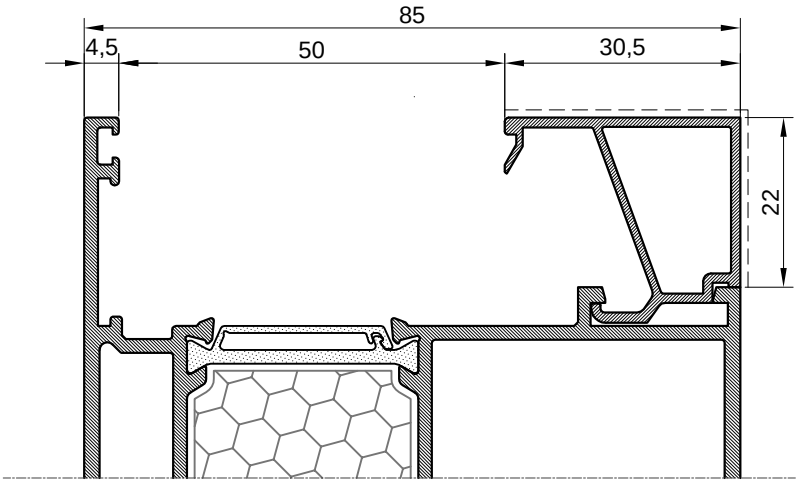

Staklo lajsna Glazing bead		
Art.Br. Art.No.	**Z40-668**	
Težina Weight	kg/m'	**0.320**
Opseg Perimeter	mm	**135.30**
L	mm	**6500**

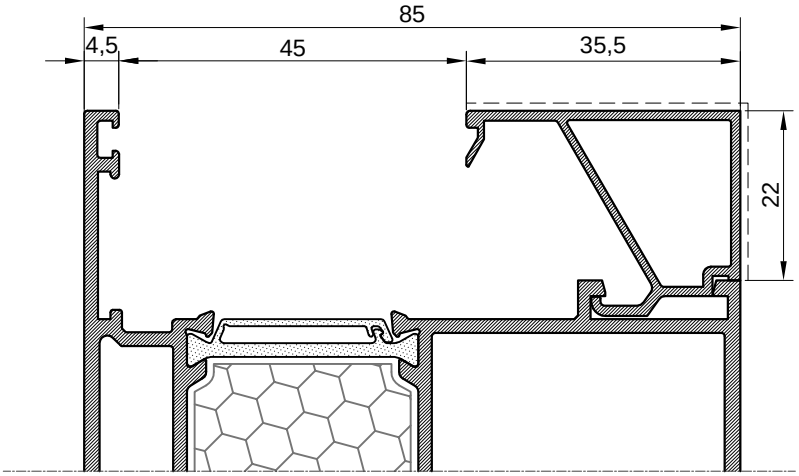

Staklo lajsna Glazing bead		
Art.Br. Art.No.	**Z40-669**	
Težina Weight	kg/m'	**0.347**
Opseg Perimeter	mm	**143.00**
L	mm	**6500**

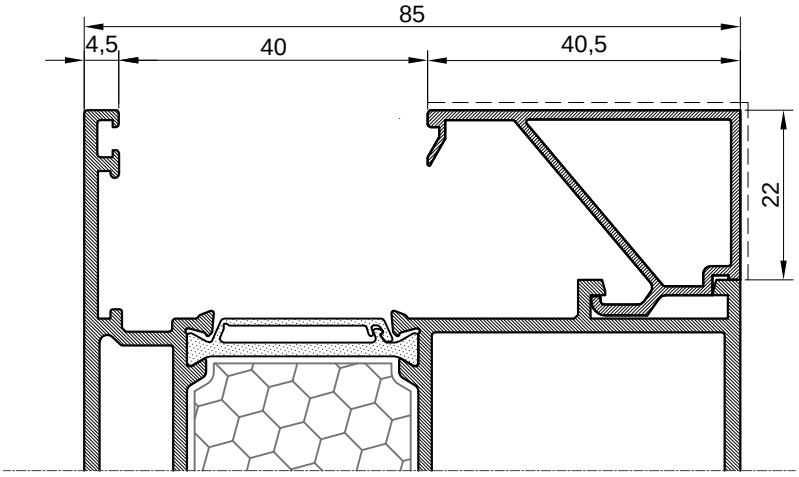

Staklo lajsna Glazing bead		
Art.Br. Art.No.	**Z40-670**	
Težina Weight	kg/m'	**0.373**
Opseg Perimeter	mm	**150.14**
L	mm	**6500**

Prikaz stakljenja
Glazing

Prikaz stakljenja za profile: FT-0561 F; FT-0562 F; FT-0563 F FT-0564 F; FT-0557 F; FT-0513 F; FT-0555 F; FT-0575 F; FT-0576 F; FT-0577 F; FT-0580 F

Glazing for profiles: FT-0561 F; FT-0562 F; FT-0563 F FT-0564 F; FT-0557 F; FT-0513 F; FT-0555 F; FT-0575 F; FT-0576 F; FT-0577 F; FT-0580 F

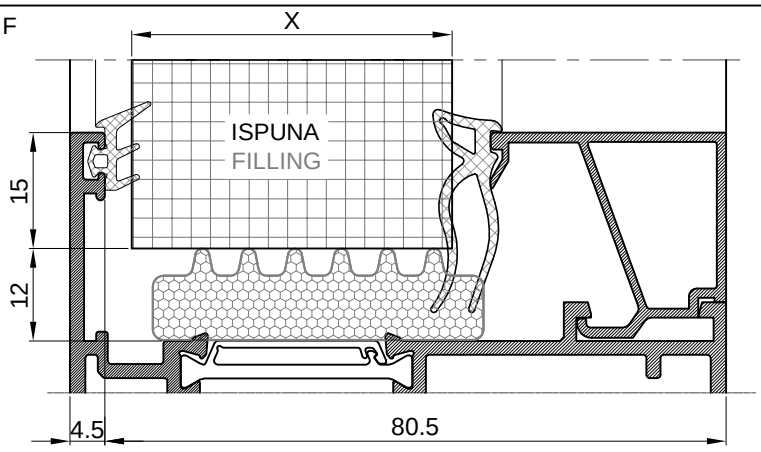

Vanjske brtve Glazing gasket-exter.		Unutarnje brtve Glazing gasket-internal		
321.003 (Z113)	321.002 (Z111)	311.002 (918)	311.003	311.004
4.5-5.5	3.5	3.5-4.5	3-4	5-6

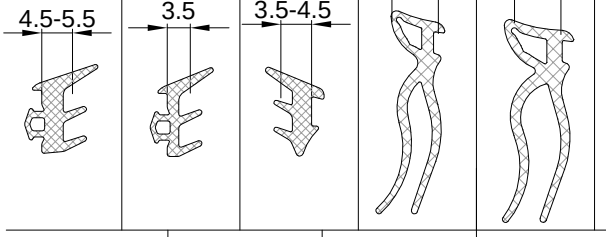

Ispuna X Fillings X	Vanjska brtva Glazing gask. -external	Vanjska brtva Glazing gask. -internal	LAJSNE ZA STAKLO GLAZING BEAD			
40-41	321.003	311.002	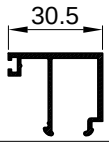 30.5 **Z40-653**	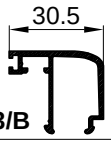 30.5 **Z40-653/B**	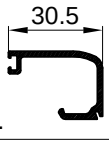 30.5 **Z40-661**	 30.5 **Z40-668**
42-43	321.002	311.003 (311.002)				
44	321.003	311.004	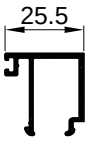 25.5 **Z40-658**			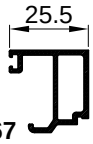 25.5 **Z40-667**
45-46	321.003	311.002				
47-48	321.002	311.003 (311.002)				
49	321.003	311.004	 20.5 **Z40-644**	 20.5 **Z40-646**	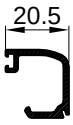 20.5 **Z40-648**	 20.5 **Z40-666**
50-51	321.003	311.002				
52-53	321.002	311.003 (311.002)				
54	321.003	311.004	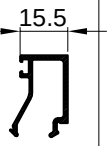 15.5 **M45-709**	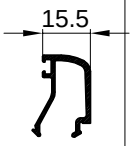 15.5 **M45-740**	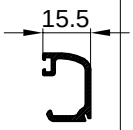 15.5 **Z40-662**	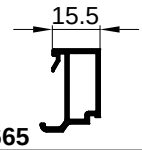 15.5 **Z40-665**
55-56	321.003	311.002				
57-58	321.002	311.003 (311.002)				
59	321.003	311.004	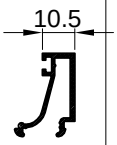 10.5 **Z40-636**	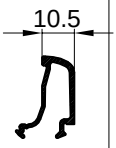 10.5 **Z40-647**	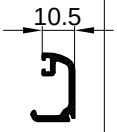 10.5 **Z40-649**	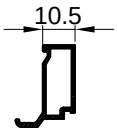 10.5 **Z40-664**
60-61	321.003	311.002				
62-63	321.002	311.003 (311.002)				
64	321.003	311.004	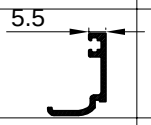 5.5 **Z40-656**			
65-66	321.003	311.003 (311.002)				
67-68	321.003	311.004	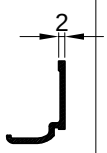 2 **Z40-660**			
69-70	321.002	311.004				
71	321.002	311.003 (311.002)				

Prikaz stakljenja za krilo FT-0565 F
Glazing for sash FT-0565 F

Vanjske brtve Glazing gasket-exter.		Unutarnje brtve Glazing gasket-internal		
321.003 (Z113)	321.002 (Z111)	311.002 (918)	311.003	311.004
4.5-5.5	3.5	3.5-4.5	3-4	5-6

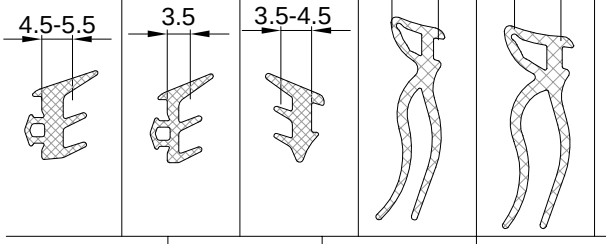

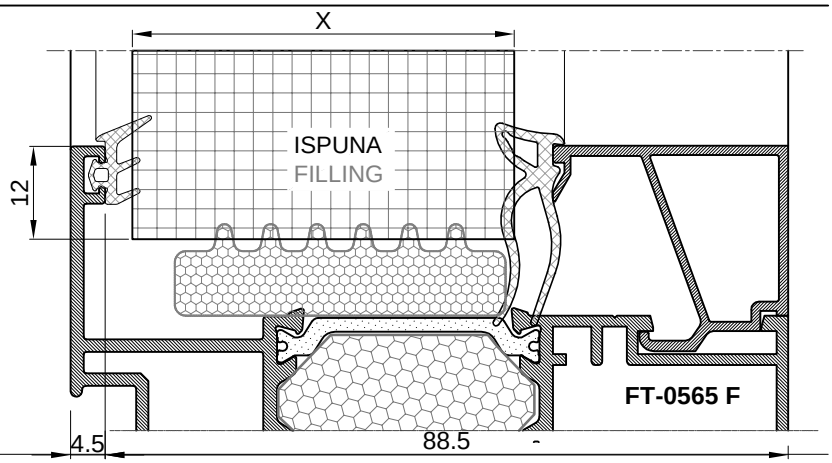

Ispuna X Fillings X	Vanjska brtva Glazing gask. -external	Vanjska brtva Glazing gask. -internal	LAJSNE ZA STAKLO GLAZING BEAD			
37-38	321.003	311.004				40.5 Z40-670
39	321.002	311.004				
40	321.002	311.002				
42-43	321.003	311.004	35.5 Z40-659			35.5 Z40-669
44	321.002	311.004				
45	321.002	311.002				
47-48	321.003	311.004	30.5 Z40-653	30.5 Z40-653/B	30.5 Z40-661	30.5 Z40-668
49	321.002	311.004				
50	321.002	311.002				
52-53	321.003	311.004	25.5 Z40-658			25.5 Z40-667
54	321.002	311.004				
55	321.002	311.002				
57-58	321.003	311.004	20.5 Z40-644	20.5 Z40-646	20.5 Z40-648	20.5 Z40-666
59	321.002	311.004				
60	321.002	311.002				
62-63	321.003	311.004	15.5 M45-709	15.5 M45-740	15.5 Z40-662	15.5 Z40-665
64	321.002	311.004				
65	321.002	311.002				
67-68	321.003	311.004	10.5 Z40-636	10.5 Z40-647	10.5 Z40-649	10.5 Z40-664
69	321.002	311.004				
70	321.002	311.002				
72-73	321.003	311.004	5.5 Z40-656			
74	321.002	311.004				
75	321.002	311.002				
	321.002		2 Z40-660			
	321.002					

Unutarnje brtve Glazing gasket-internal			
311.002 (918)	311.003	311.004	311.005

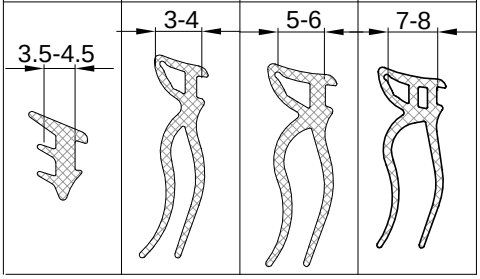

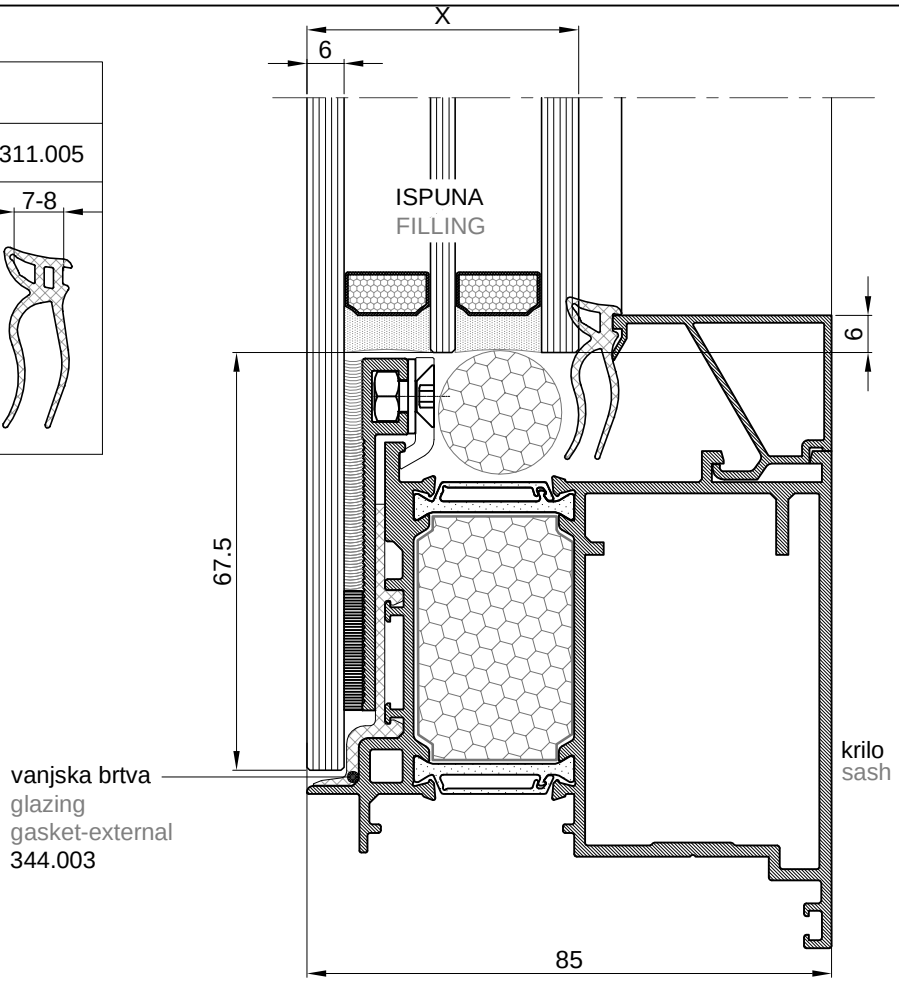

Ispuna X Filling X	Vanjska brtva External gasket	Unutarnja brtva Glazing gasket-internal	LAJSNA ZA STAKLO GLAZING BEAD
42	344.003	311.005	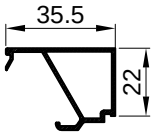 **Z40-669**
44	344.003	311.004	
46	344.003	311.003 (311.002)	
48	344.003	311.004	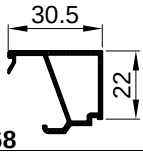 **Z40-668**
50	344.003	311.002	
52	344.003	311.005	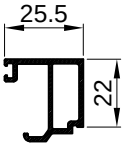 **Z40-667**
54	344.003	311.004	
56	344.003	311.003 (311.002)	
58	344.003	311.004	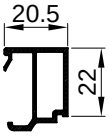 **Z40-666**
60	344.003	311.002	

PREPORUKE ZA RASPORED PODMETAČA KOD UGRADNJE ELEMENATA ZA ISPUNU
RECOMMENDATION FOR PACKERS PLACEMENT BY INSTALLATION OF FILLINGS

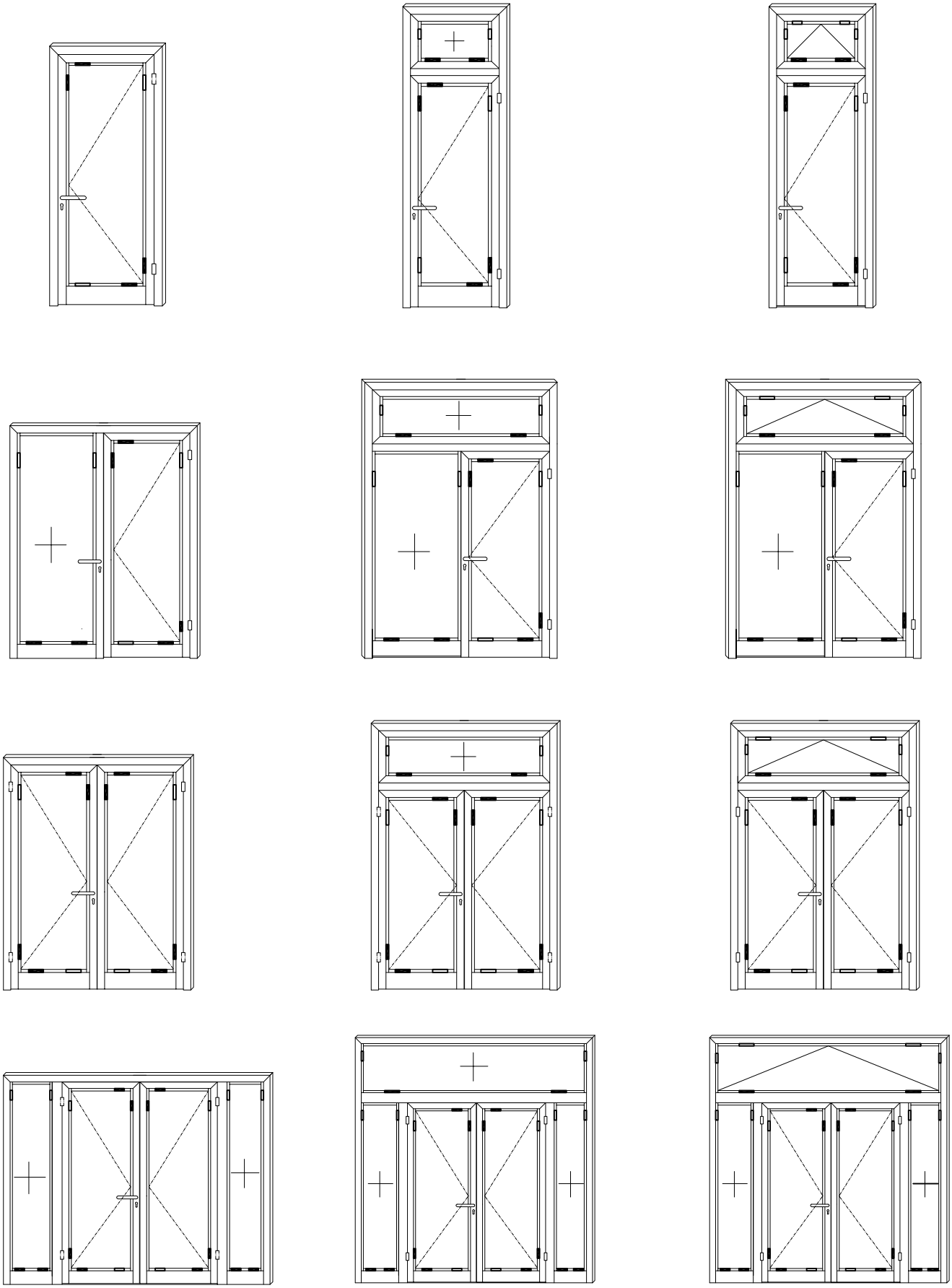

Materijal podmetača: PVC
Material packers: PVC

nosivi podmetač
support packer

odstojni podmetač
distance packer

Presjeci
Cross sections

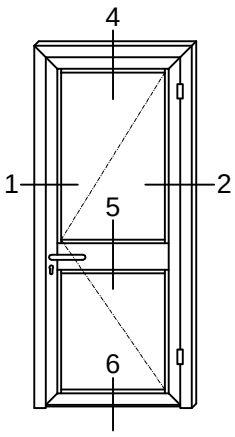
4
1
2
5
6

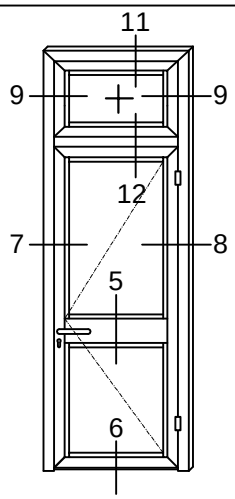
11
9
9
12
7
8
5
6

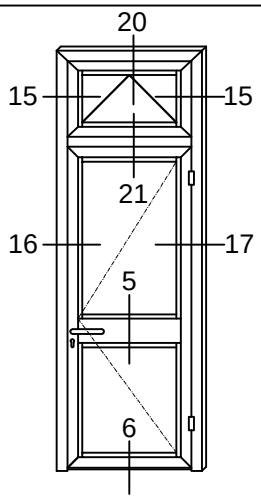
20
15
15
21
16
17
5
6

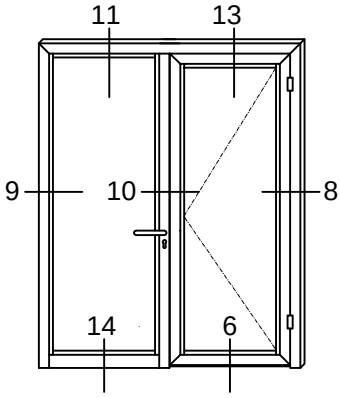
11
13
9
10
8
14
6

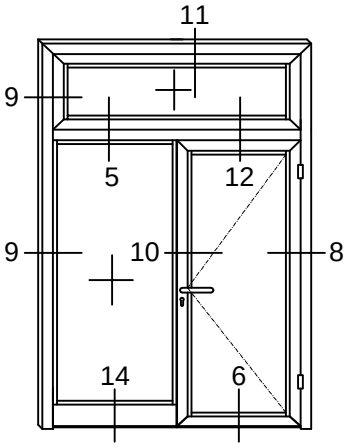
11
9
5
12
9
10
8
14
6

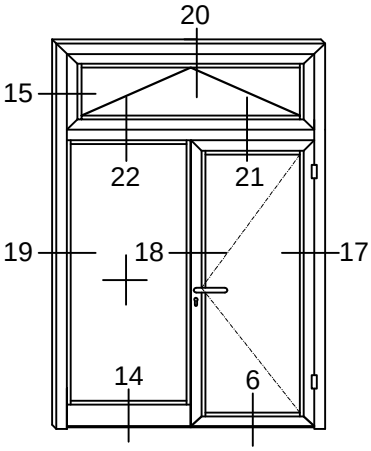
20
15
22
21
19
18
17
14
6

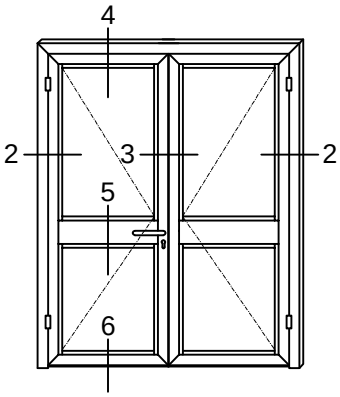
4
2
3
2
5
6

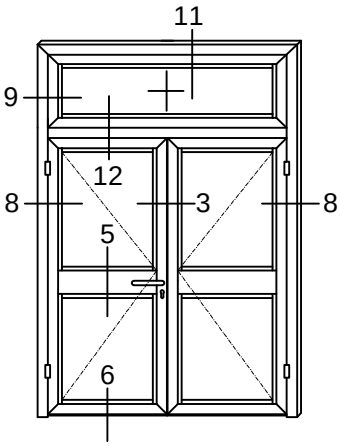
11
9
12
8
3
8
5
6

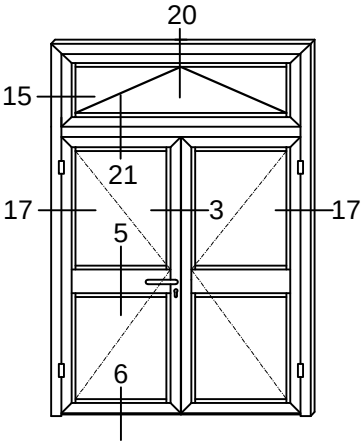
20
15
21
17
3
17
5
6

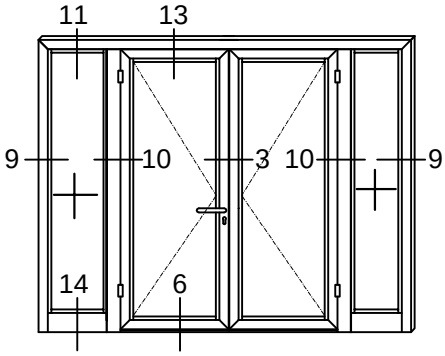
11
13
9
10
3
10
9
14
6

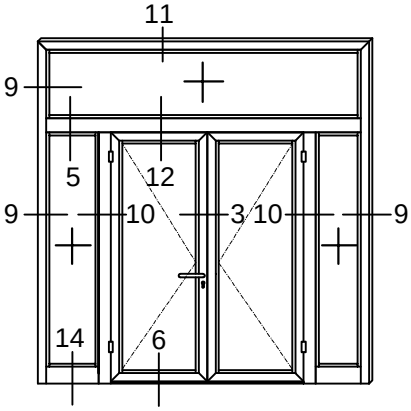
11
9
5
12
9
10
3
10
9
14
6

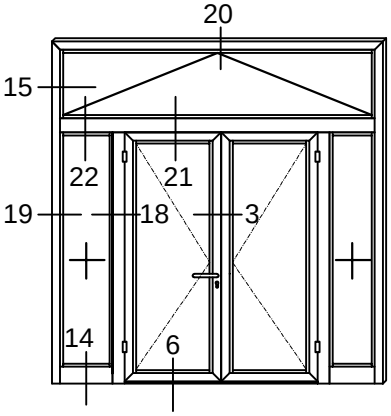
20
15
22
21
19
18
3
14
6

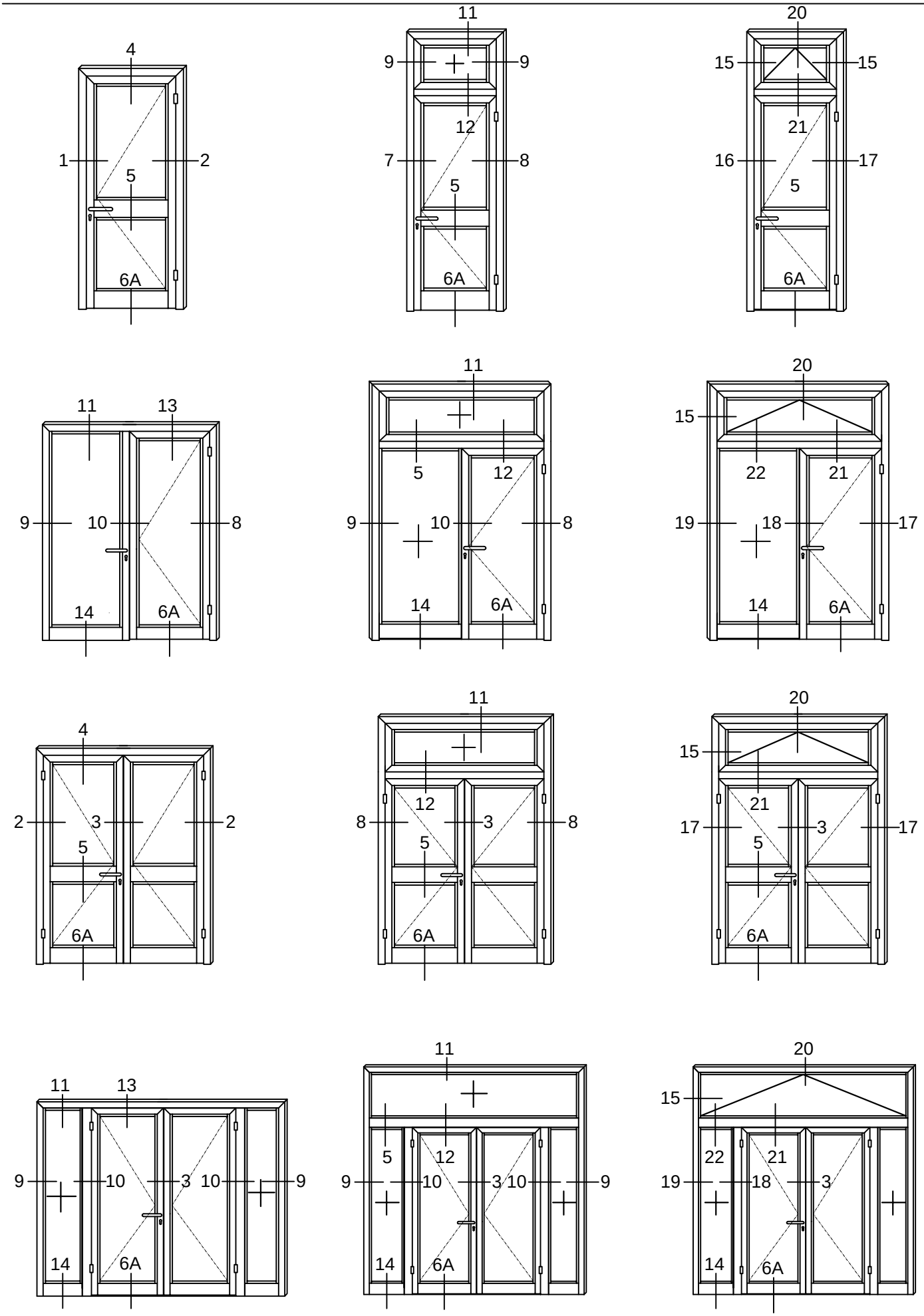
4
1
2
5
6A
11
9
9
12
7
8
5
6A
20
15
15
21
16
17
5
6A
11
13
9
10
8
14
6A
11
5
12
9
10
8
14
6A
20
15
22
21
19
18
17
14
6A
4
2
3
2
5
6A
11
12
8
3
8
5
6A
20
15
21
17
3
17
5
6A
11
13
9
10
3
10
9
14
6A
11
5
12
9
10
3
10
9
14
6A
20
15
22
21
19
18
3
14
6A

PRESJEK-1
CROSS SECTION-1

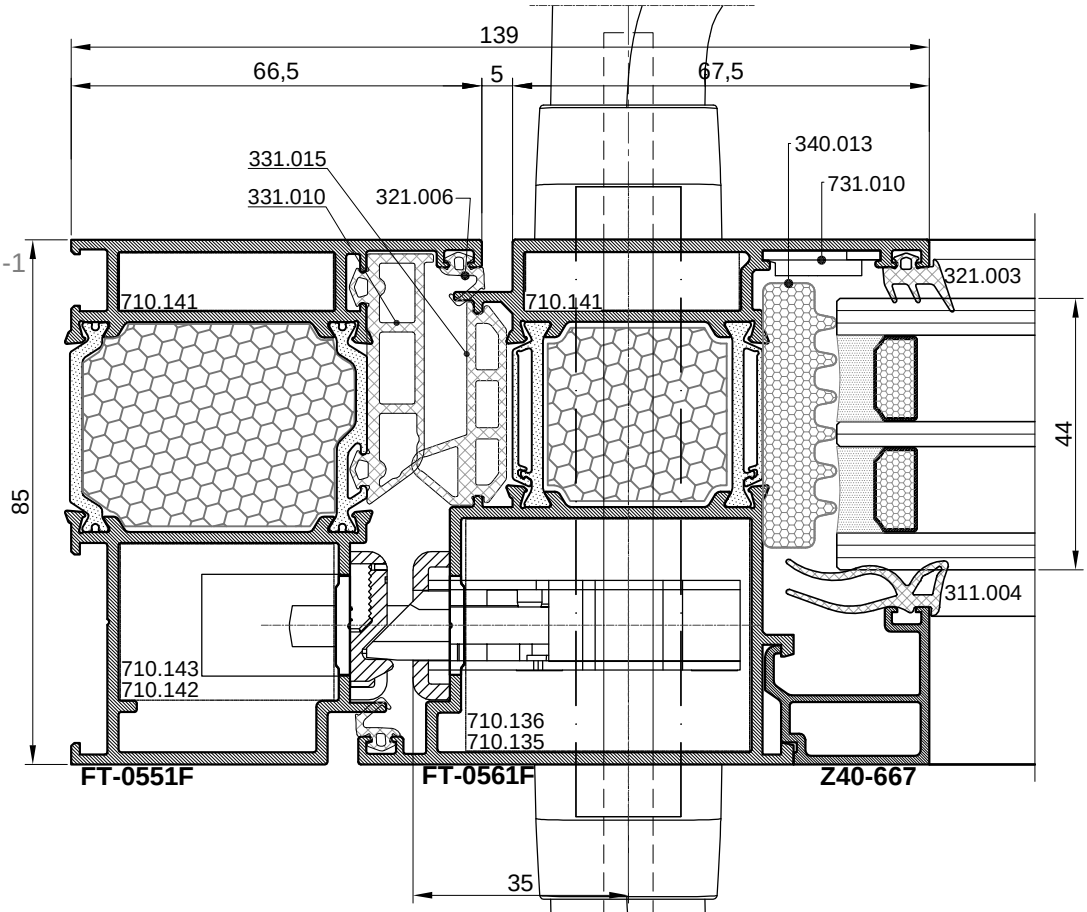

PRESJEK-2
CROSS SECTION-2

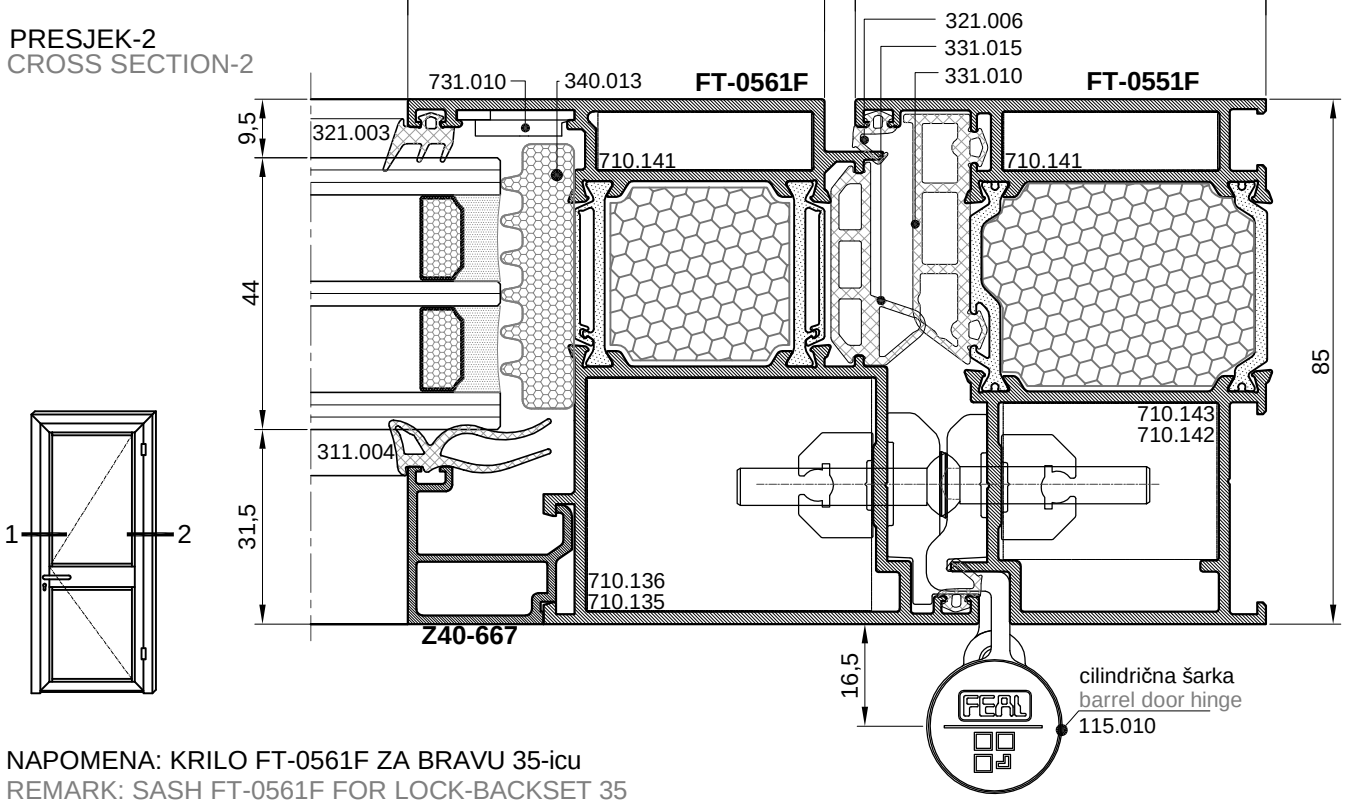

NAPOMENA: KRILO FT-0561F ZA BRAVU 35-icu
REMARK: SASH FT-0561F FOR LOCK-BACKSET 35

PRESJEK-1
CROSS SECTION-1

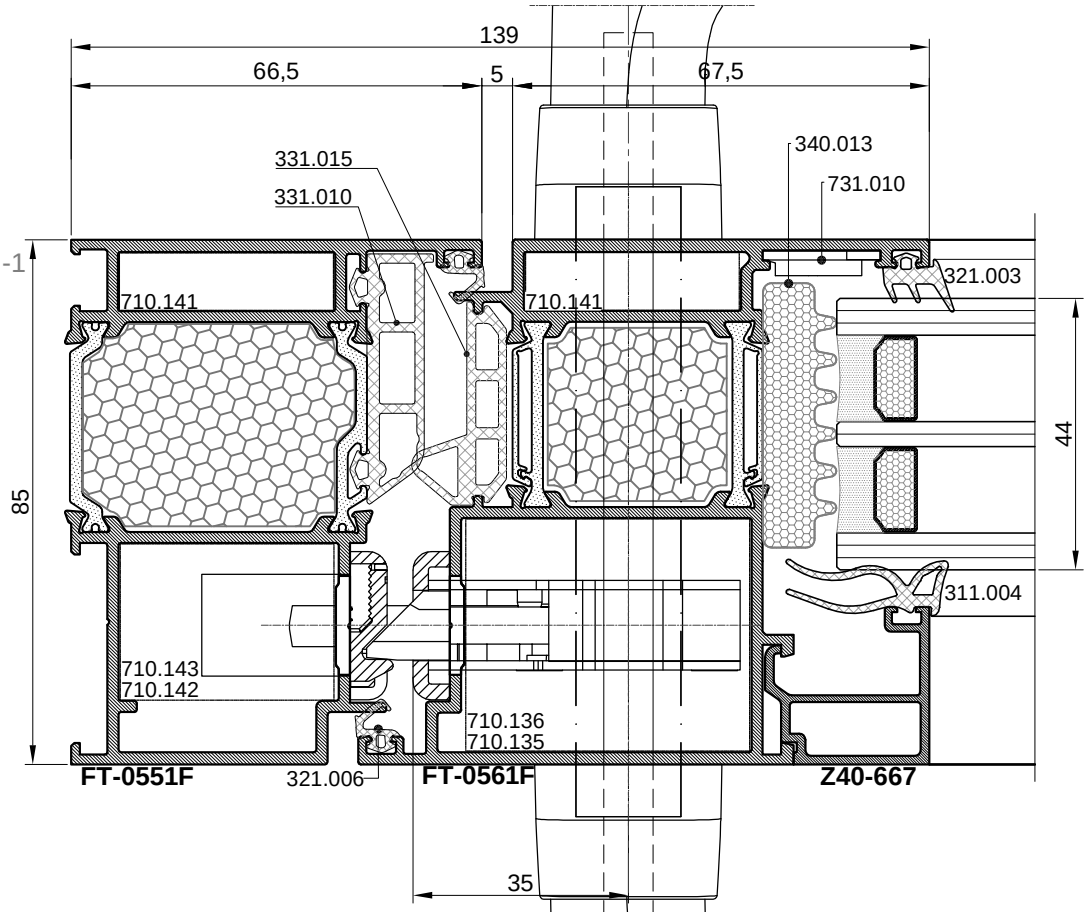

PRESJEK-2
CROSS SECTION-2

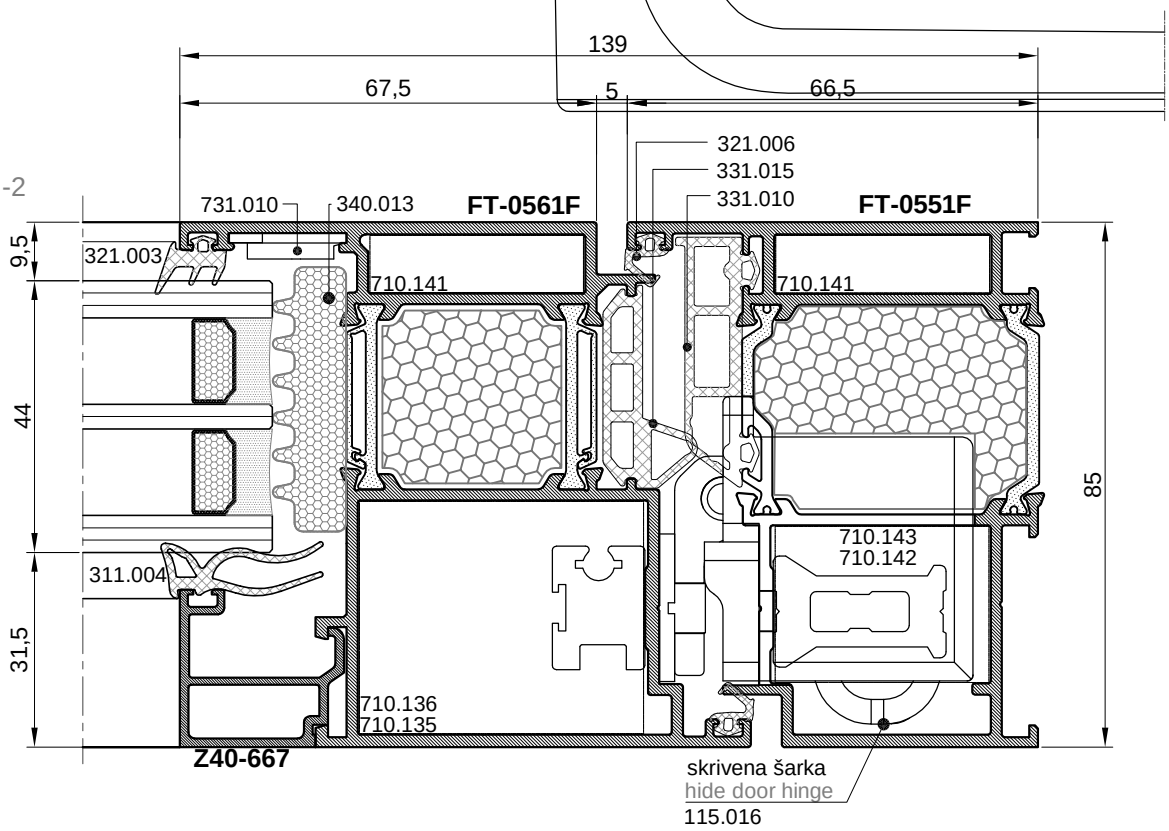

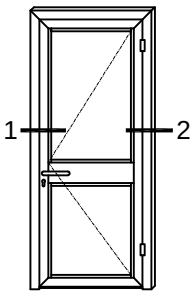

NAPOMENA: KRILO FT-0561F ZA BRAVU 35-icu
REMARK: SASH FT-0561F FOR LOCK-BACKSET 35

PRESJEK-1
CROSS SECTION-1

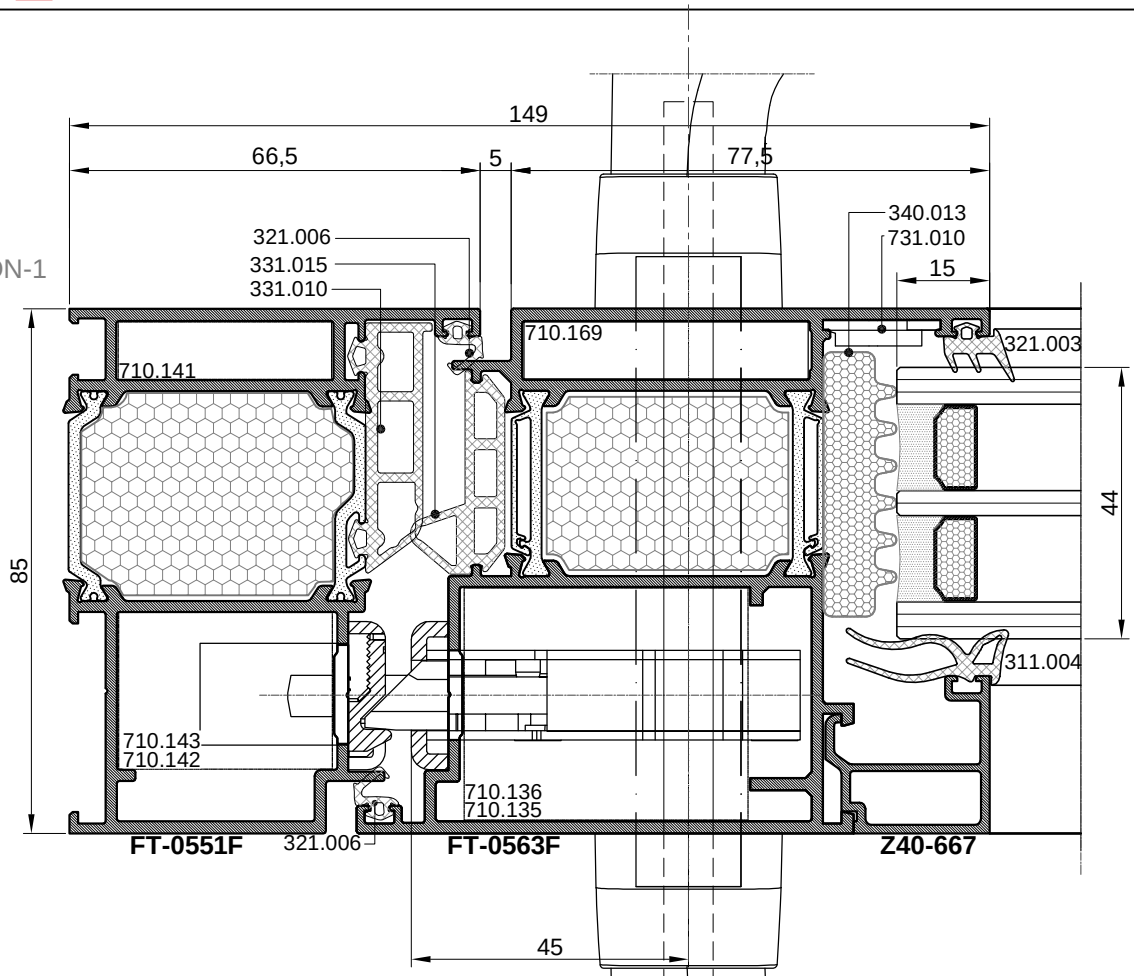

PRESJEK-2
CROSS SECTION-2

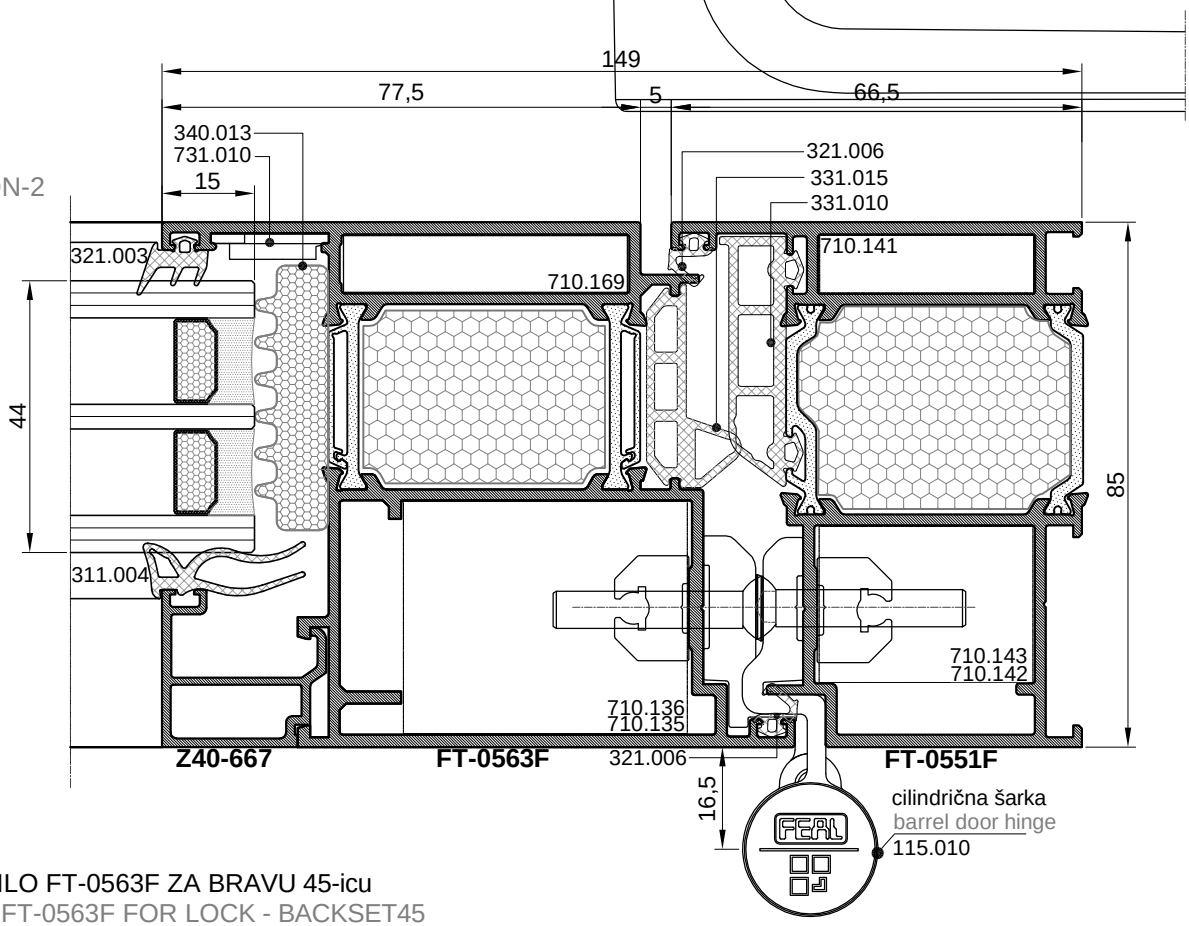

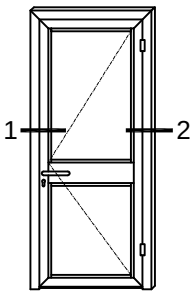

NAPOMENA: KRILO FT-0563F ZA BRAVU 45-icu
REMARK: SASH FT-0563F FOR LOCK - BACKSET45

PRESJEK-1
CROSS SECTION-1

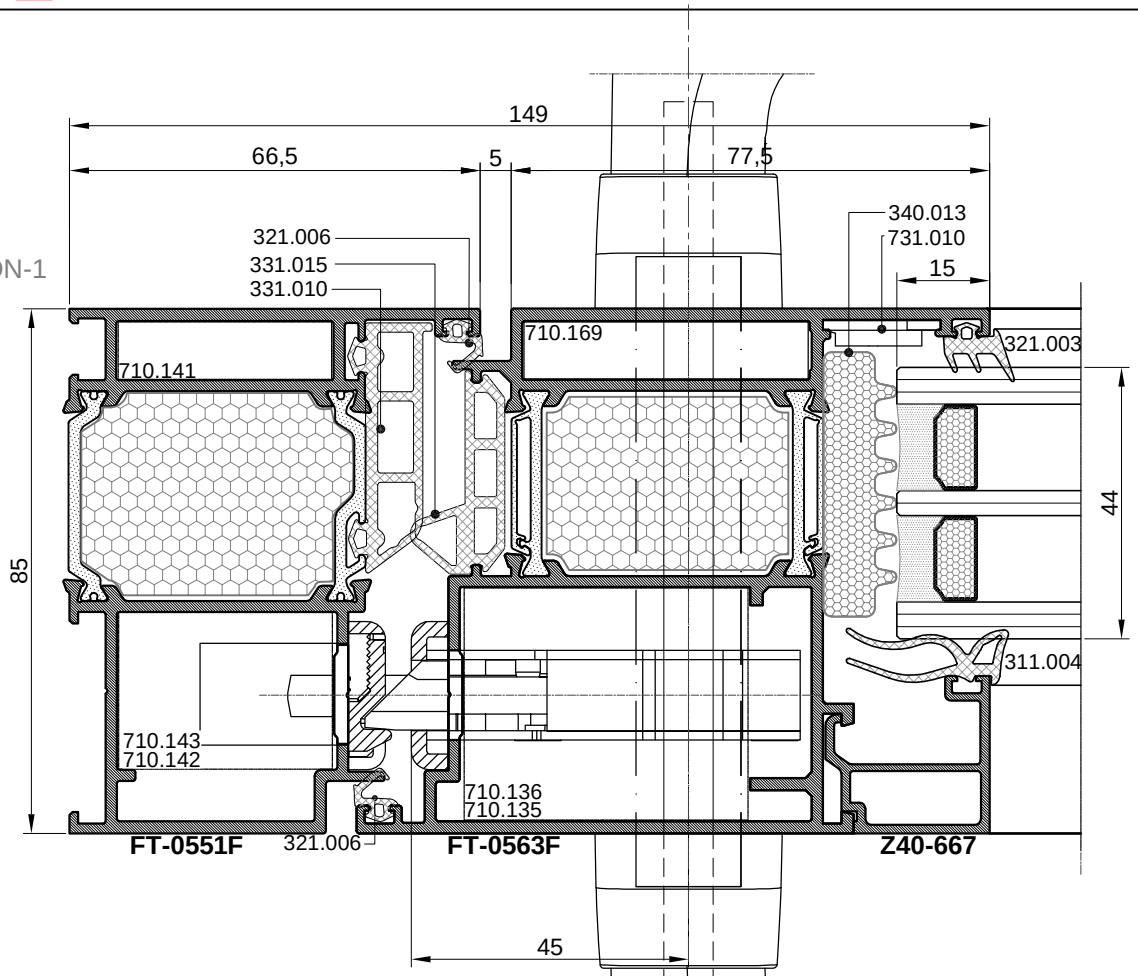

PRESJEK-2
CROSS SECTION-2

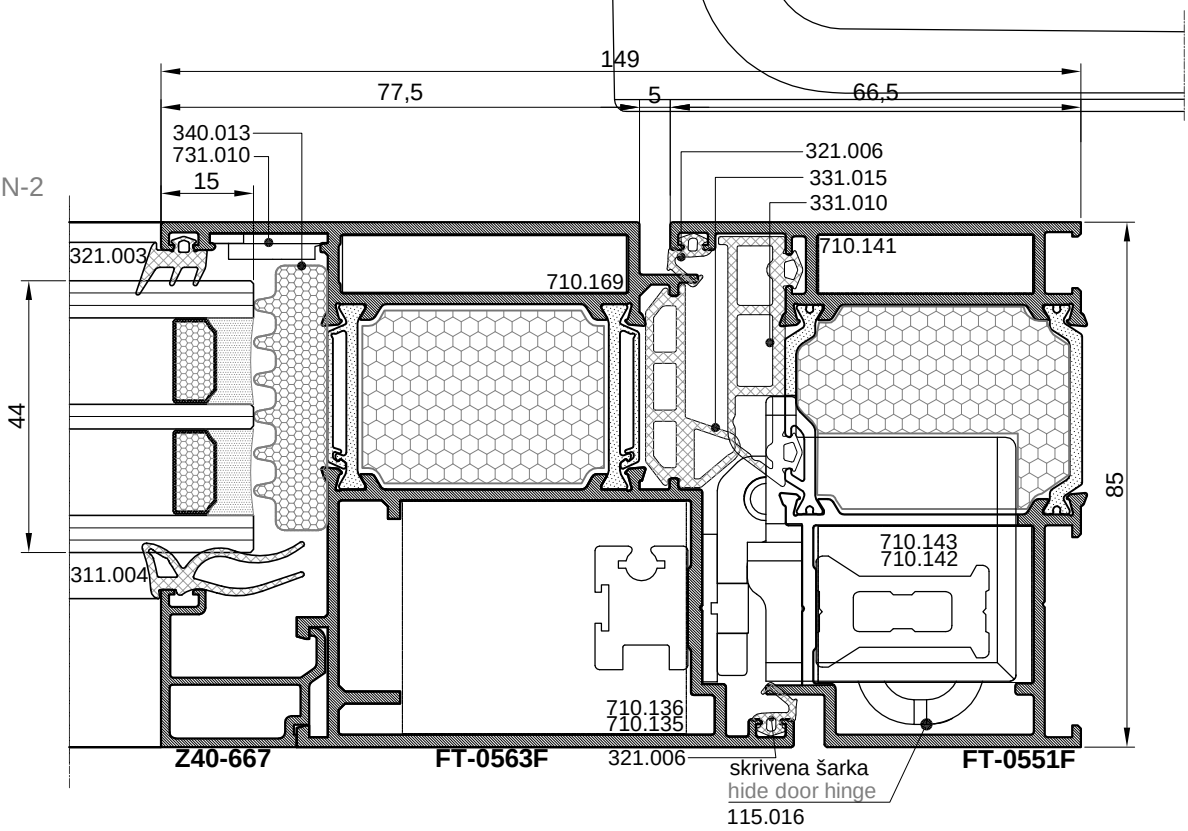

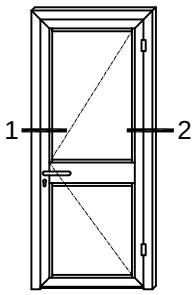

NAPOMENA: KRILO FT-0563F ZA BRAVU 45-icu
REMARK: SASH FT-0563F FOR LOCK - BACKSET45

PRESJEK-2
CROSS SECTION-2

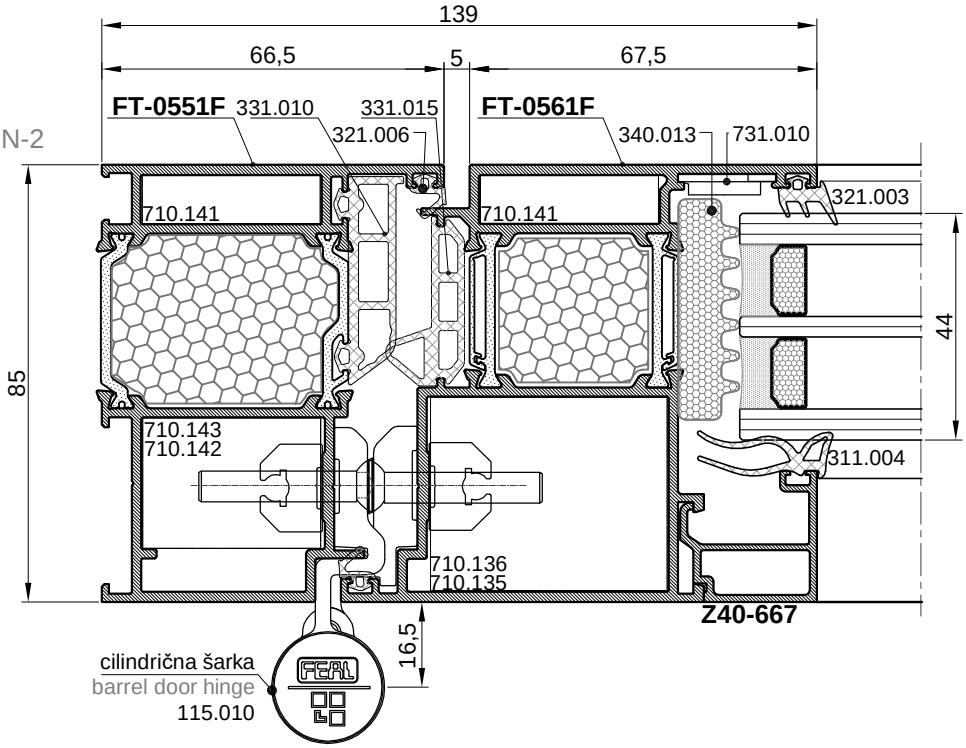

PRESJEK-3
CROSS SECTION-3

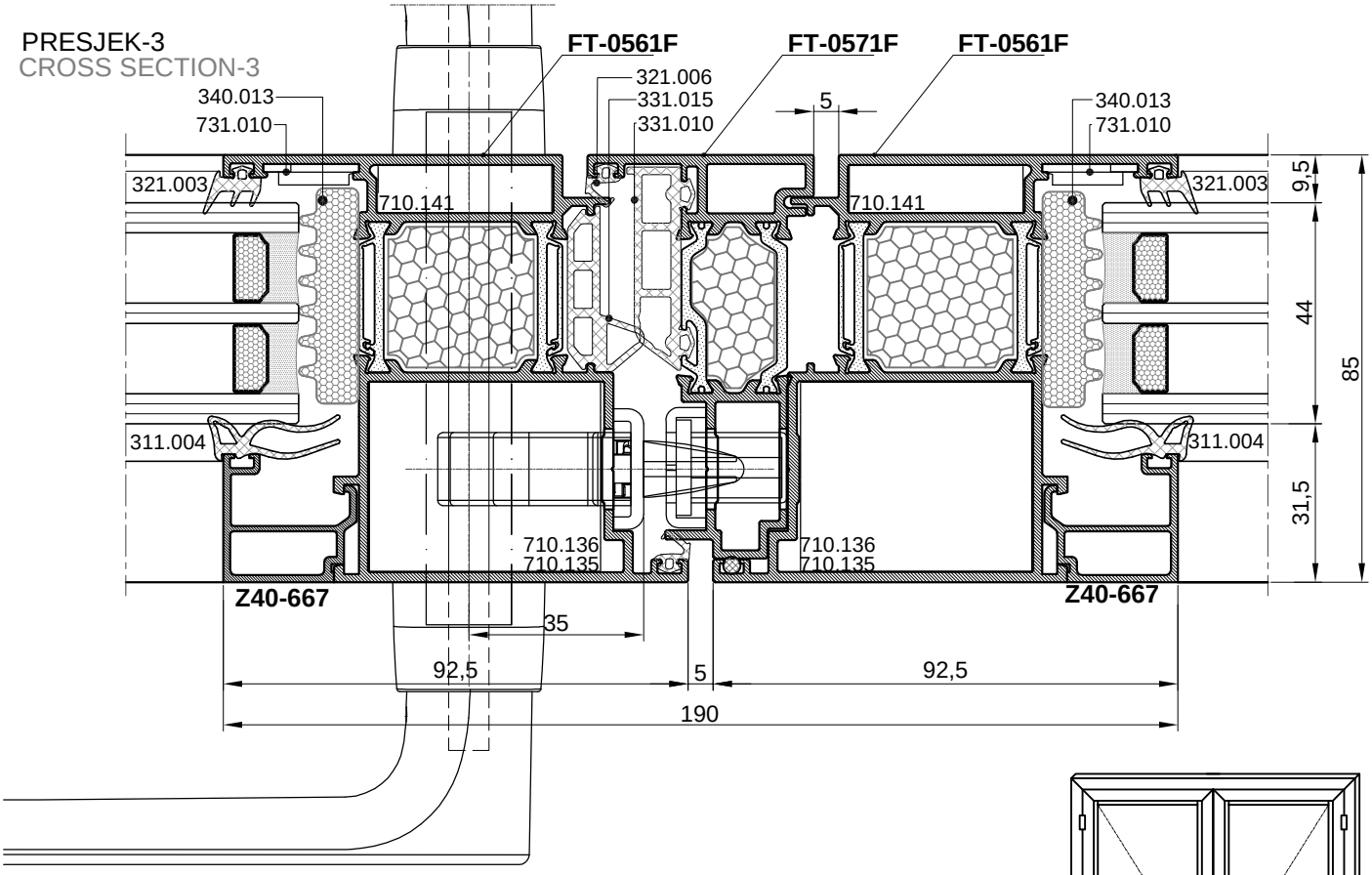

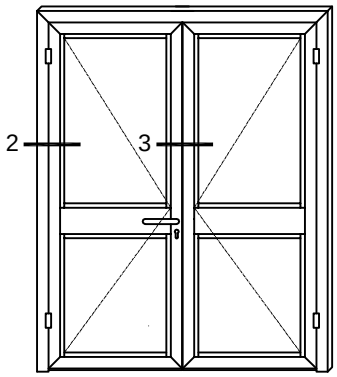

NAPOMENA: KRILO FT-0561F ZA BRAVU 35-icu
REMARK: SASH FT-0561F FOR LOCK - BACKSET 35

PRESJEK-2
CROSS SECTION-2

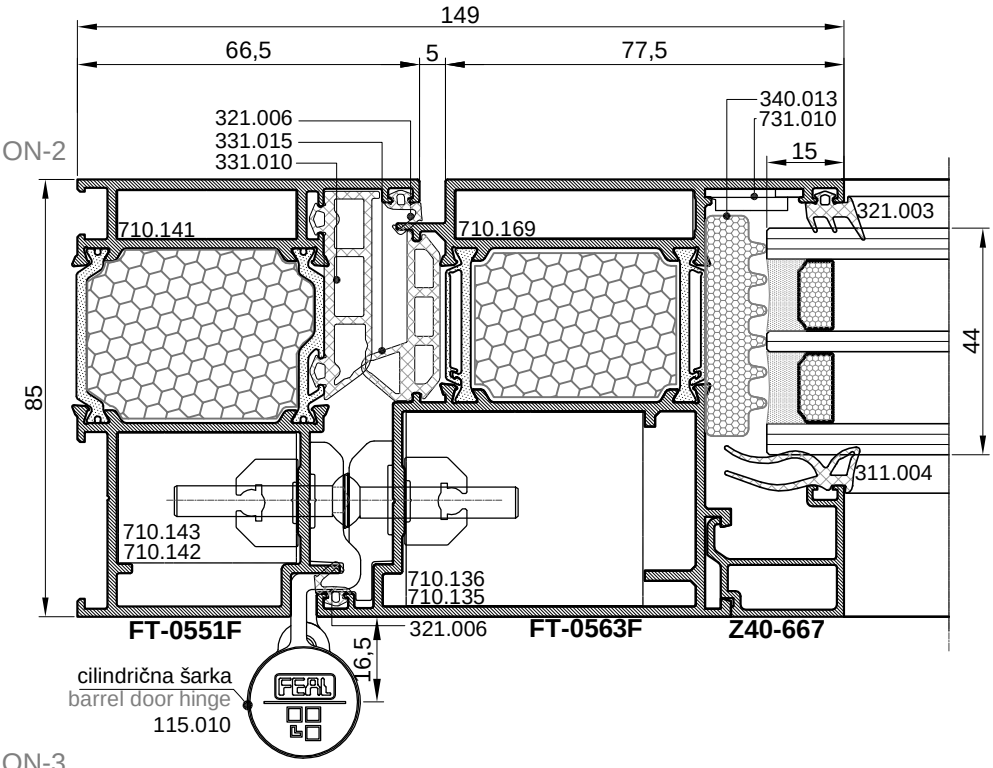

PRESJEK-3
CROSS SECTION-3

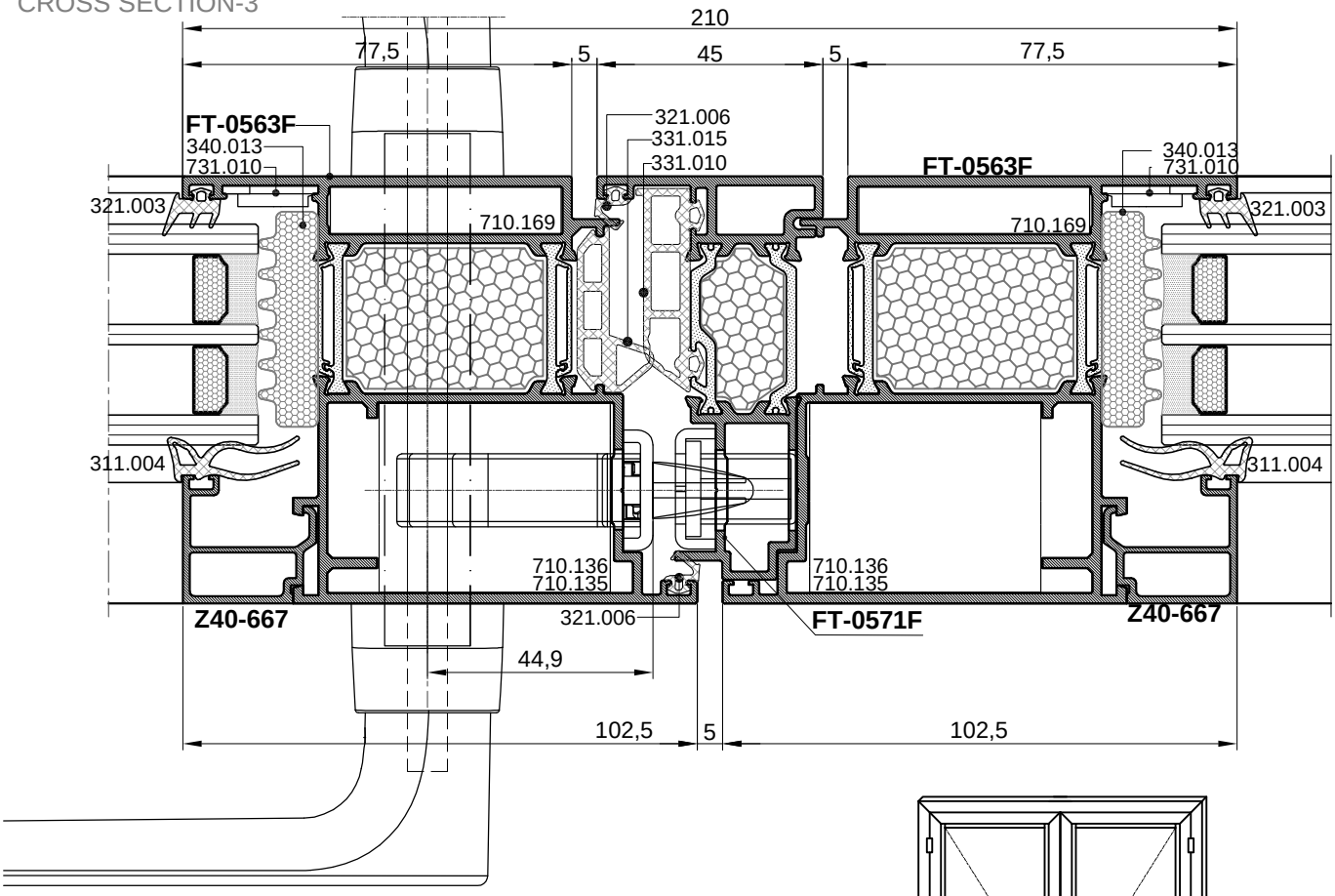

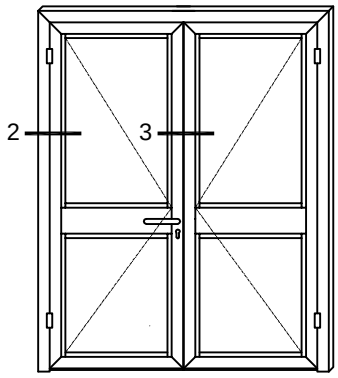

NAPOMENA: KRILO FT-0563F ZA BRAVU 45-icu
REMARK: SASH FT-0563F FOR LOCK - BACKSET 45

PRESJEK-7
CROSS SECTION-7

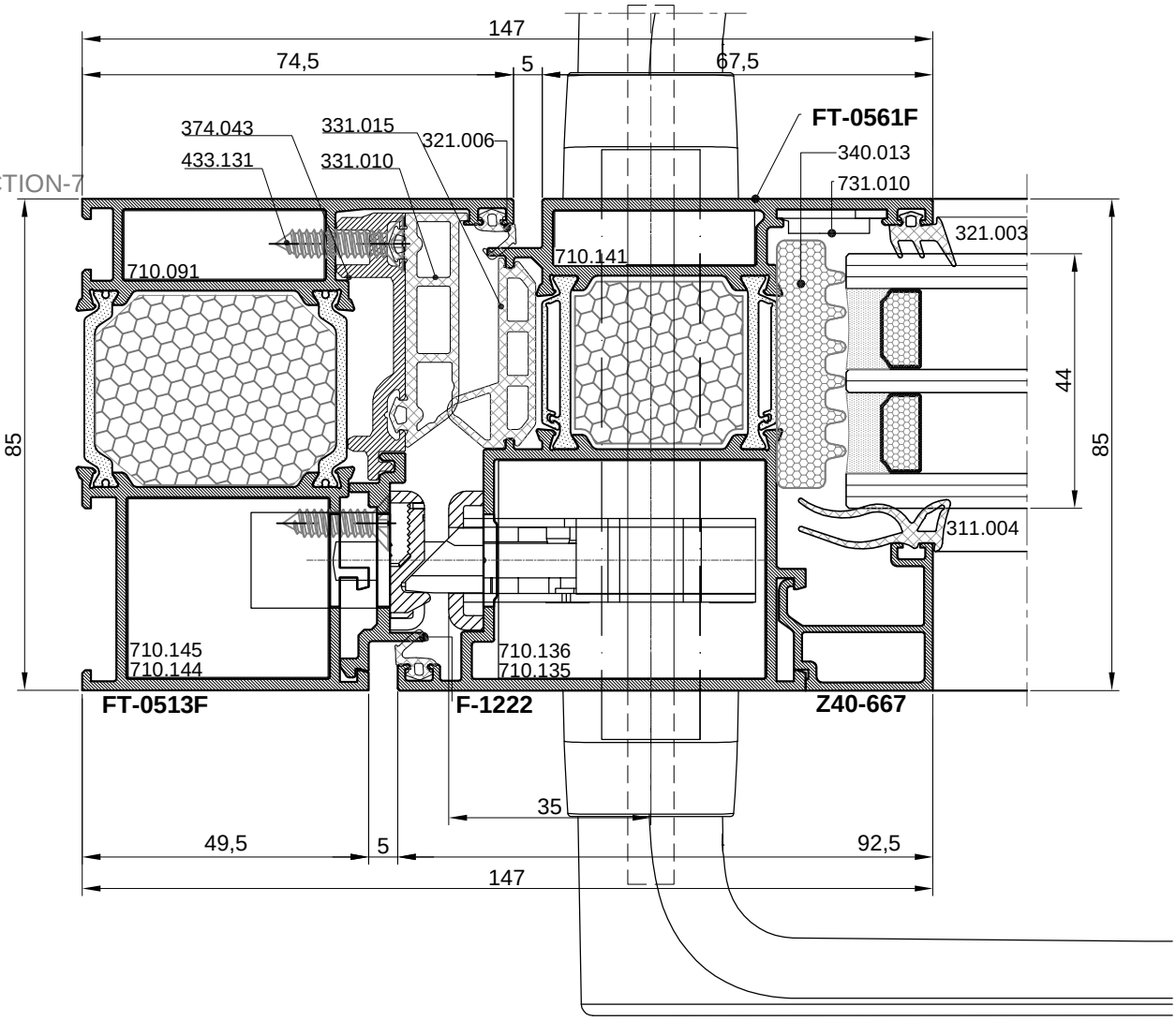

PRESJEK-8
CROSS SECTION-8

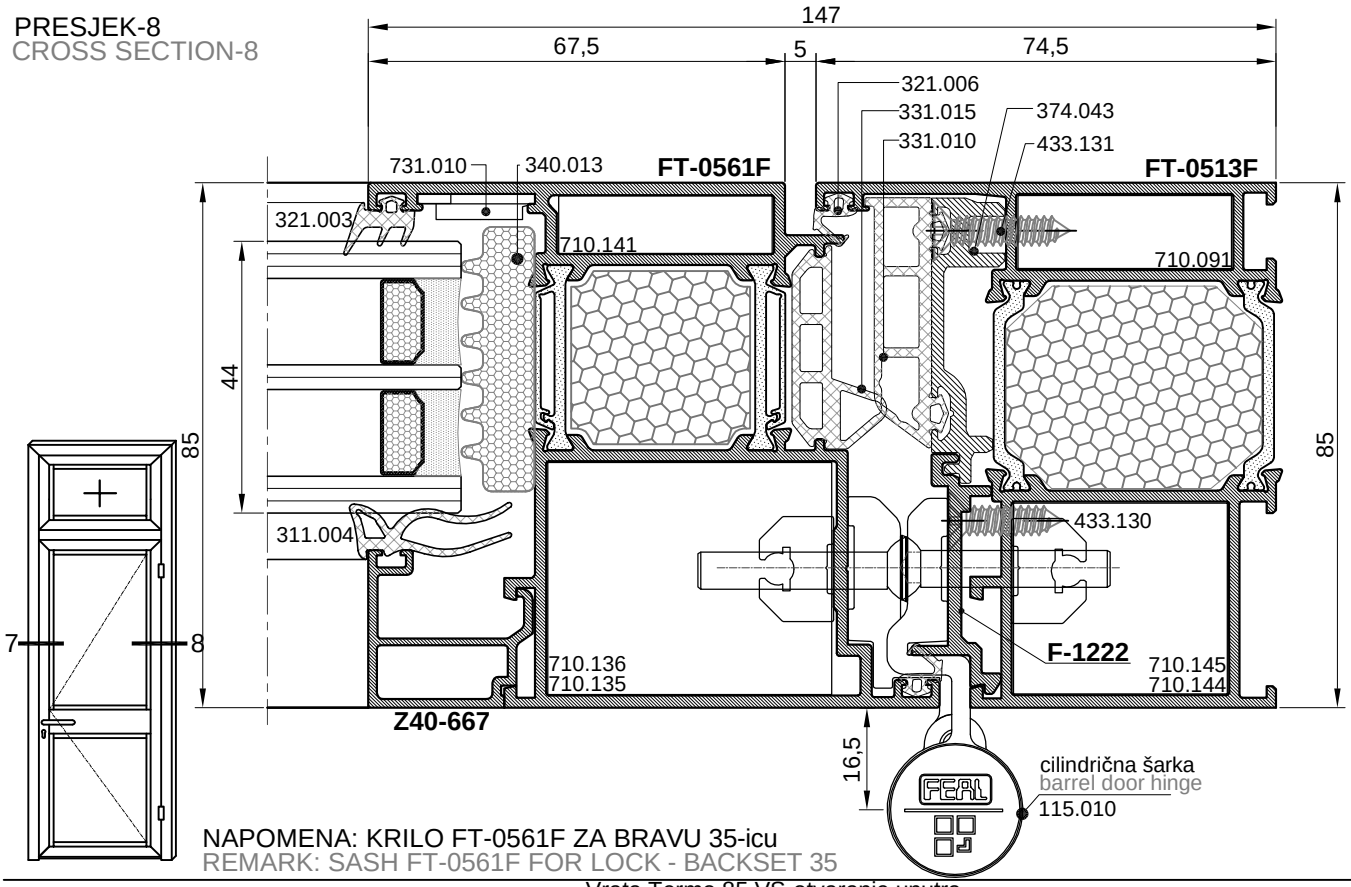

NAPOMENA: KRILO FT-0561F ZA BRAVU 35-icu
REMARK: SASH FT-0561F FOR LOCK - BACKSET 35

PRESJEK-7
CROSS SECTION-7

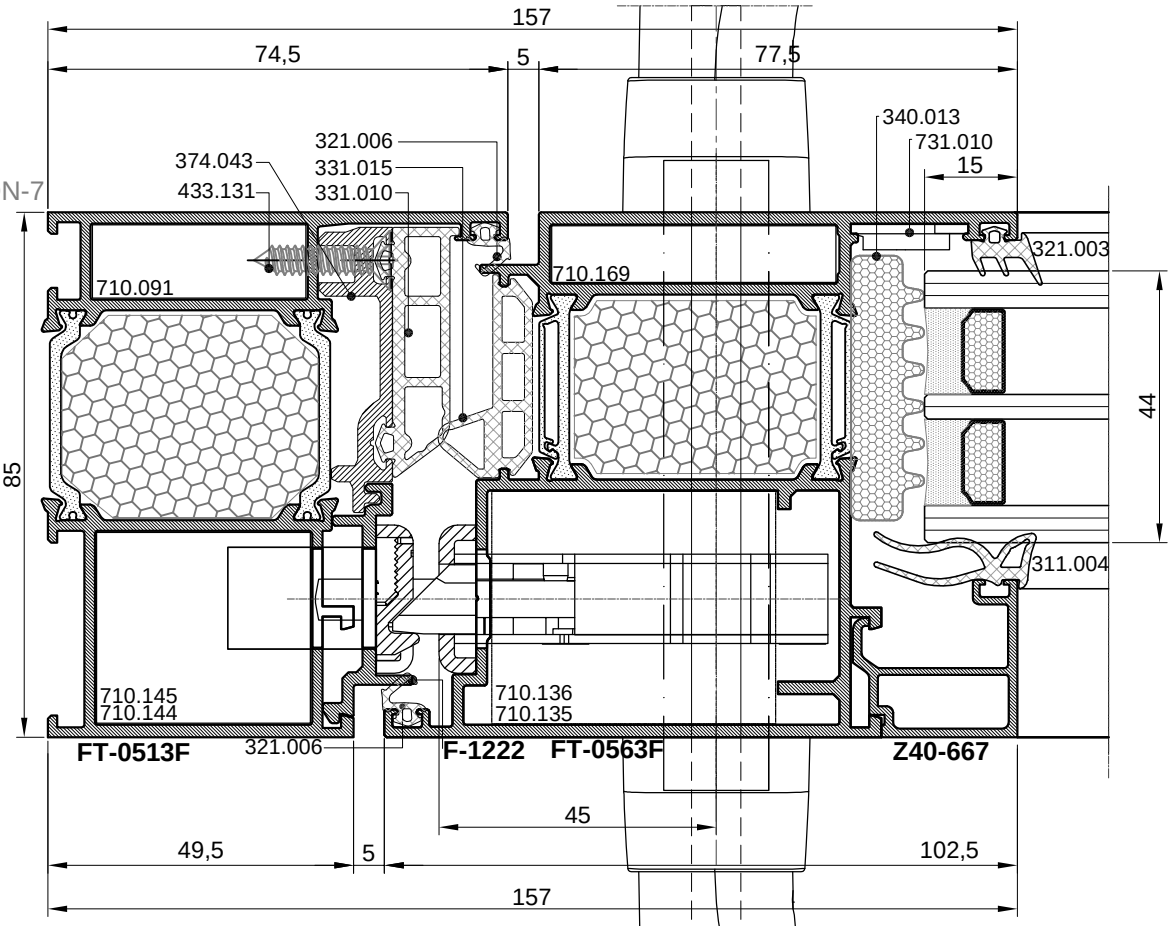

PRESJEK-8
CROSS SECTION-8

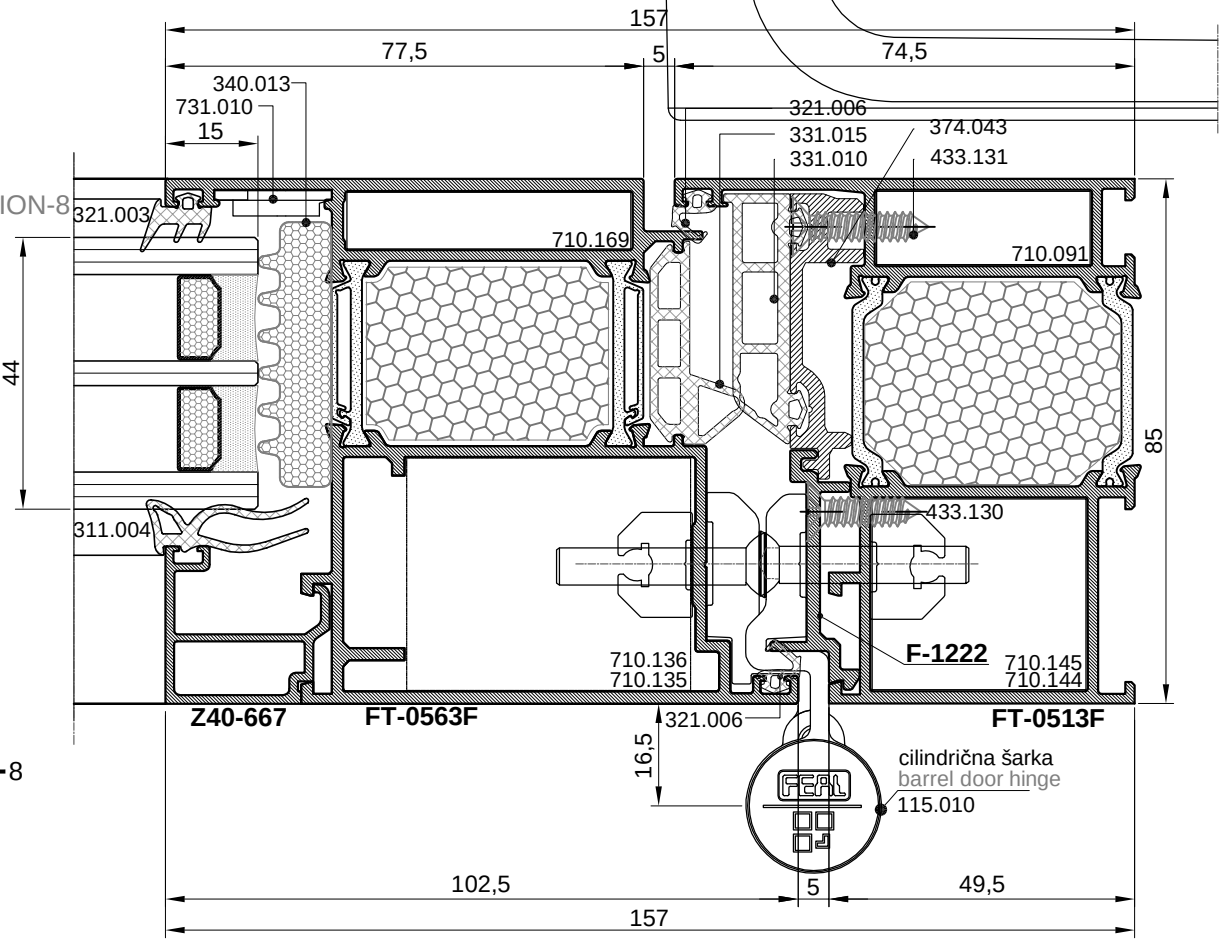

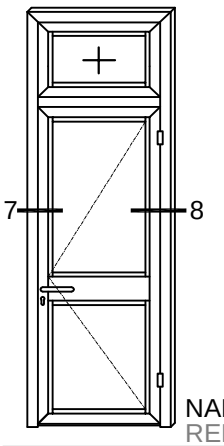

NAPOMENA: KRILO FT-0563F ZA BRAVU 45-icu
REMARK: SASH FT-0563F FOR LOCK -BACKSET 45

PRESJEK-8
CROSS SECTION-8

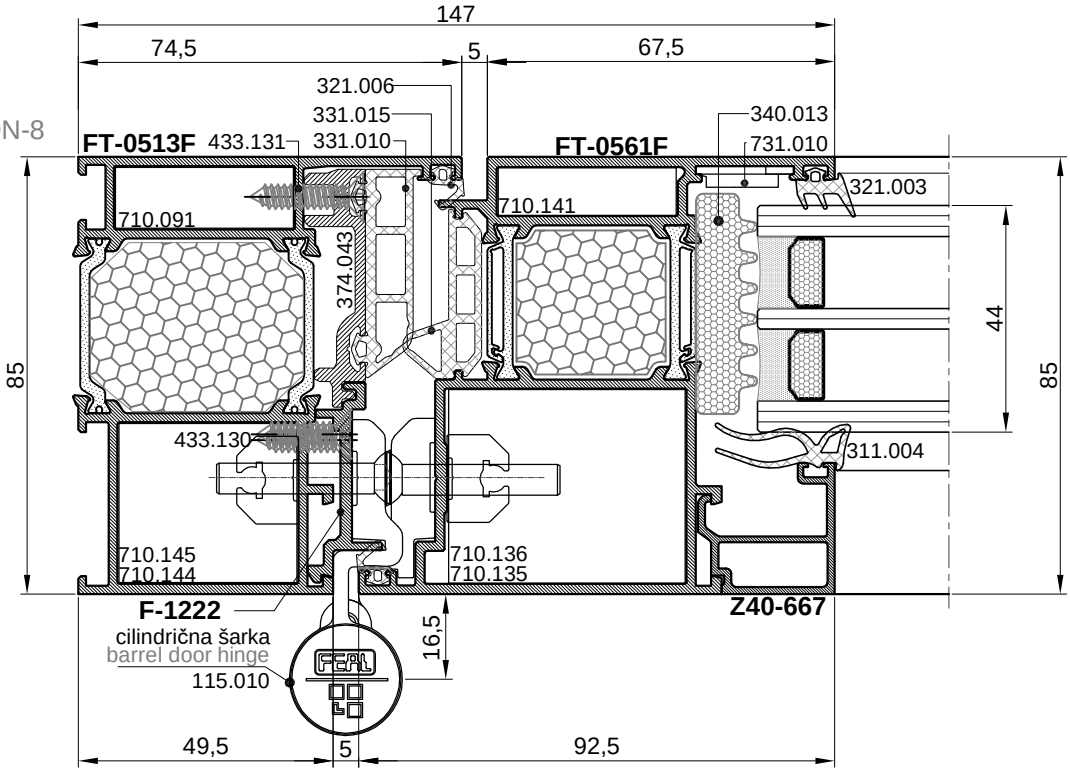

PRESJEK-3
CROSS SECTION-3

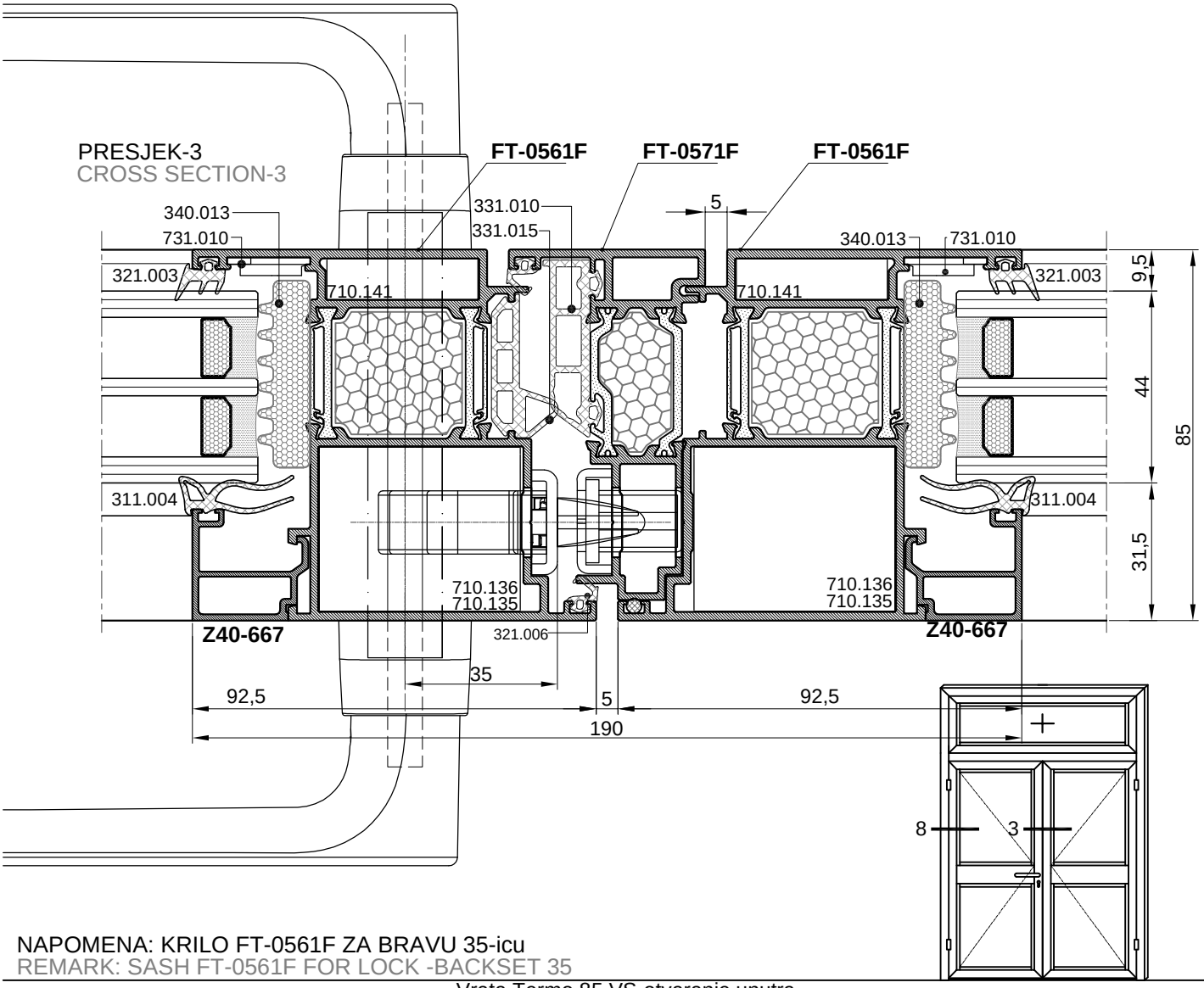

NAPOMENA: KRILO FT-0561F ZA BRAVU 35-icu
REMARK: SASH FT-0561F FOR LOCK -BACKSET 35

PRESJEK-8
CROSS SECTION-8

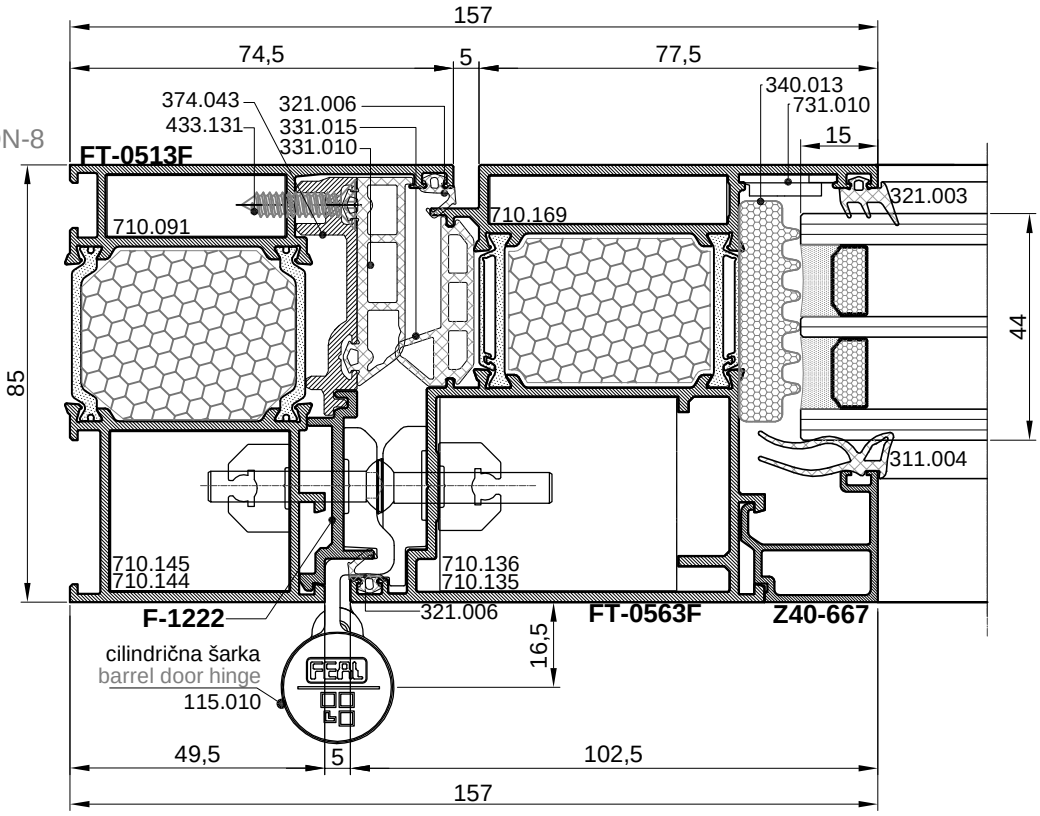

PRESJEK-3
CROSS SECTION-3

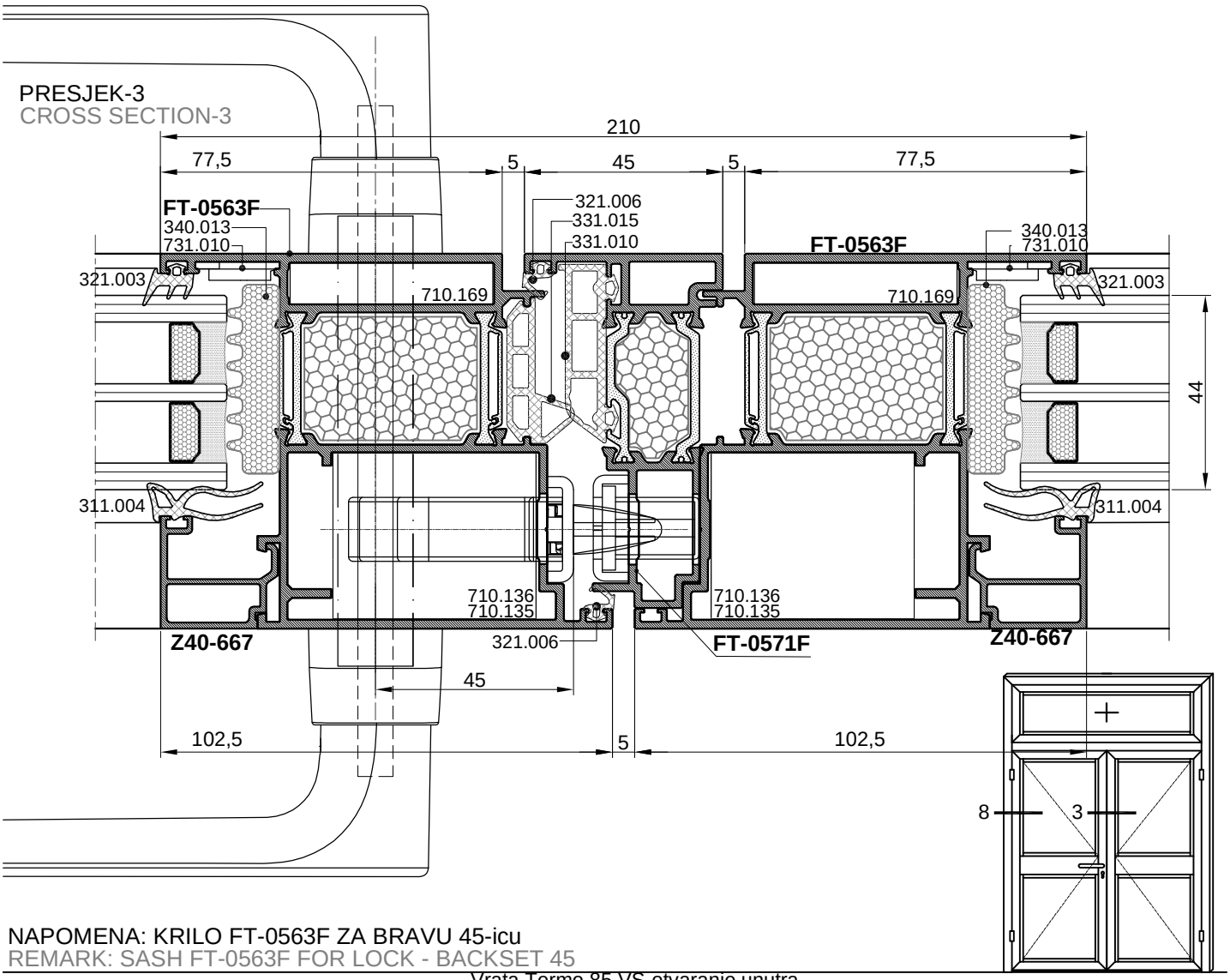

NAPOMENA: KRILO FT-0563F ZA BRAVU 45-icu
REMARK: SASH FT-0563F FOR LOCK - BACKSET 45

PRESJEK-9
CROSS SECTION-9

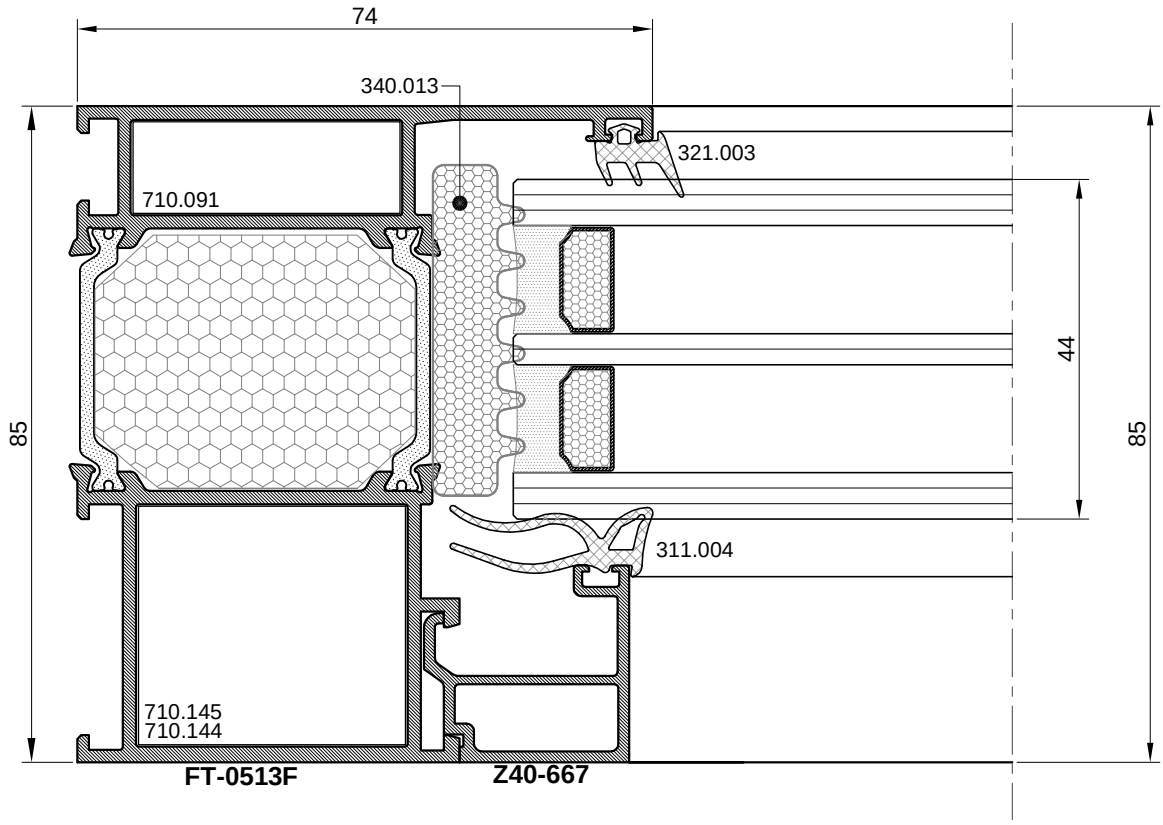

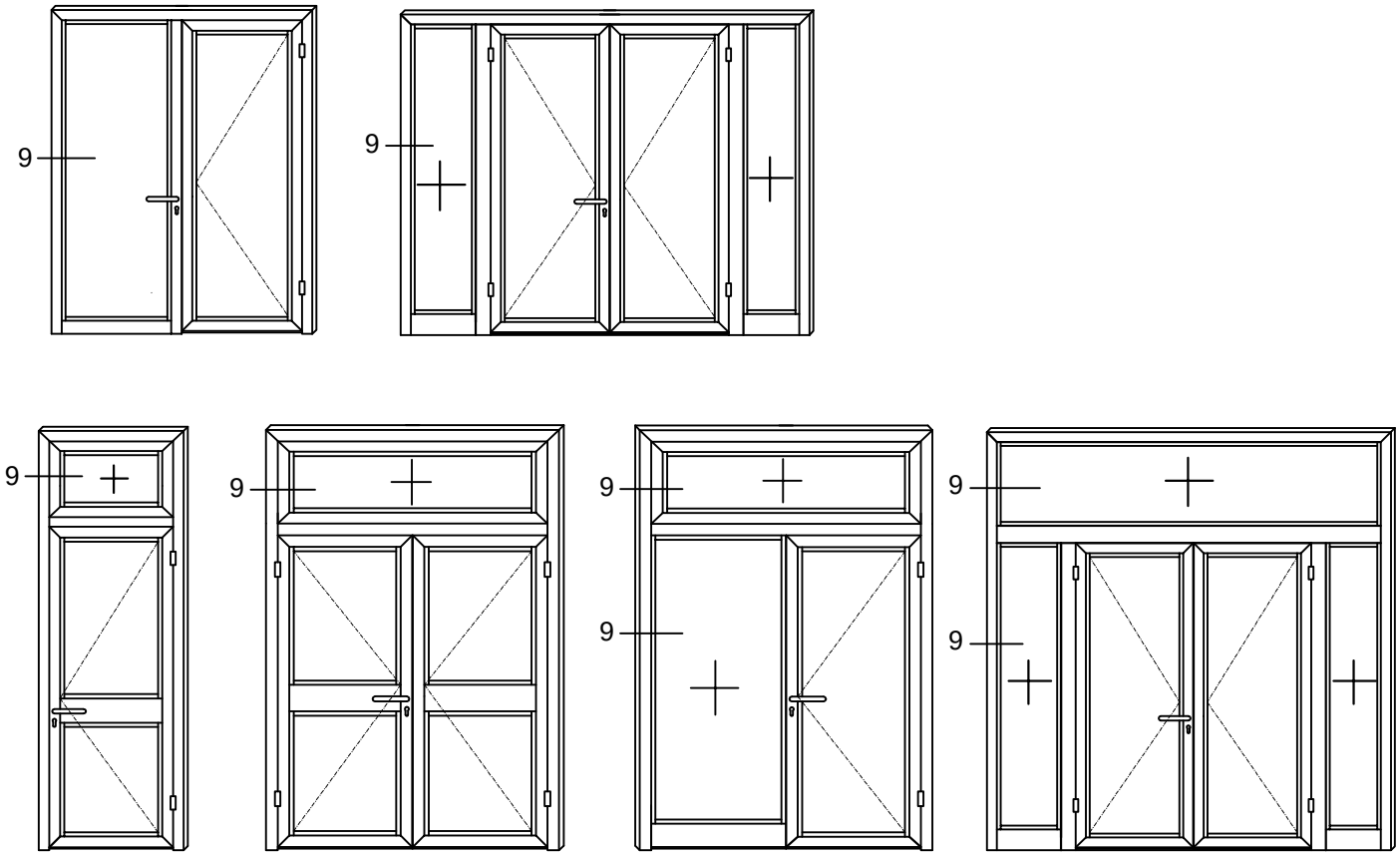

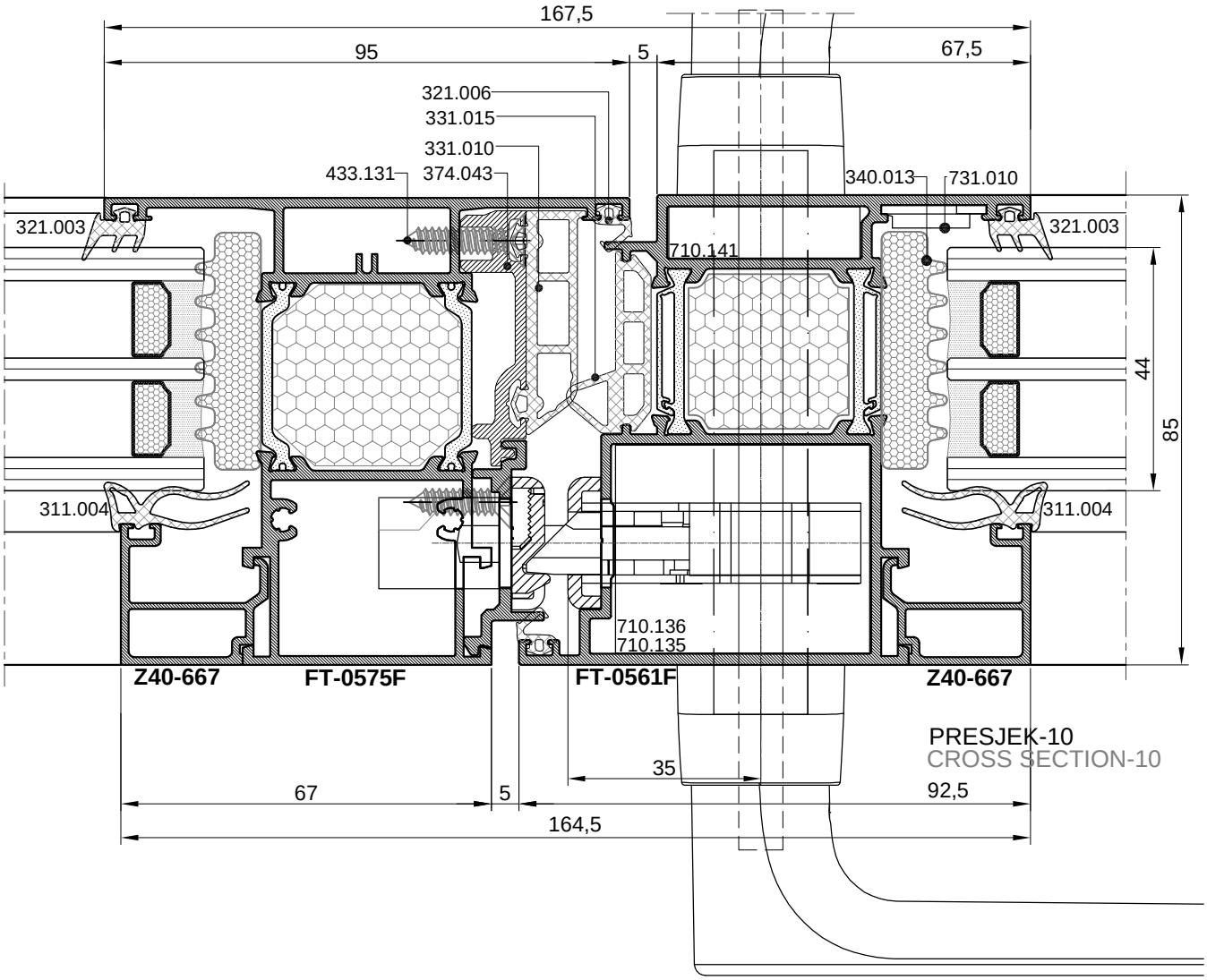

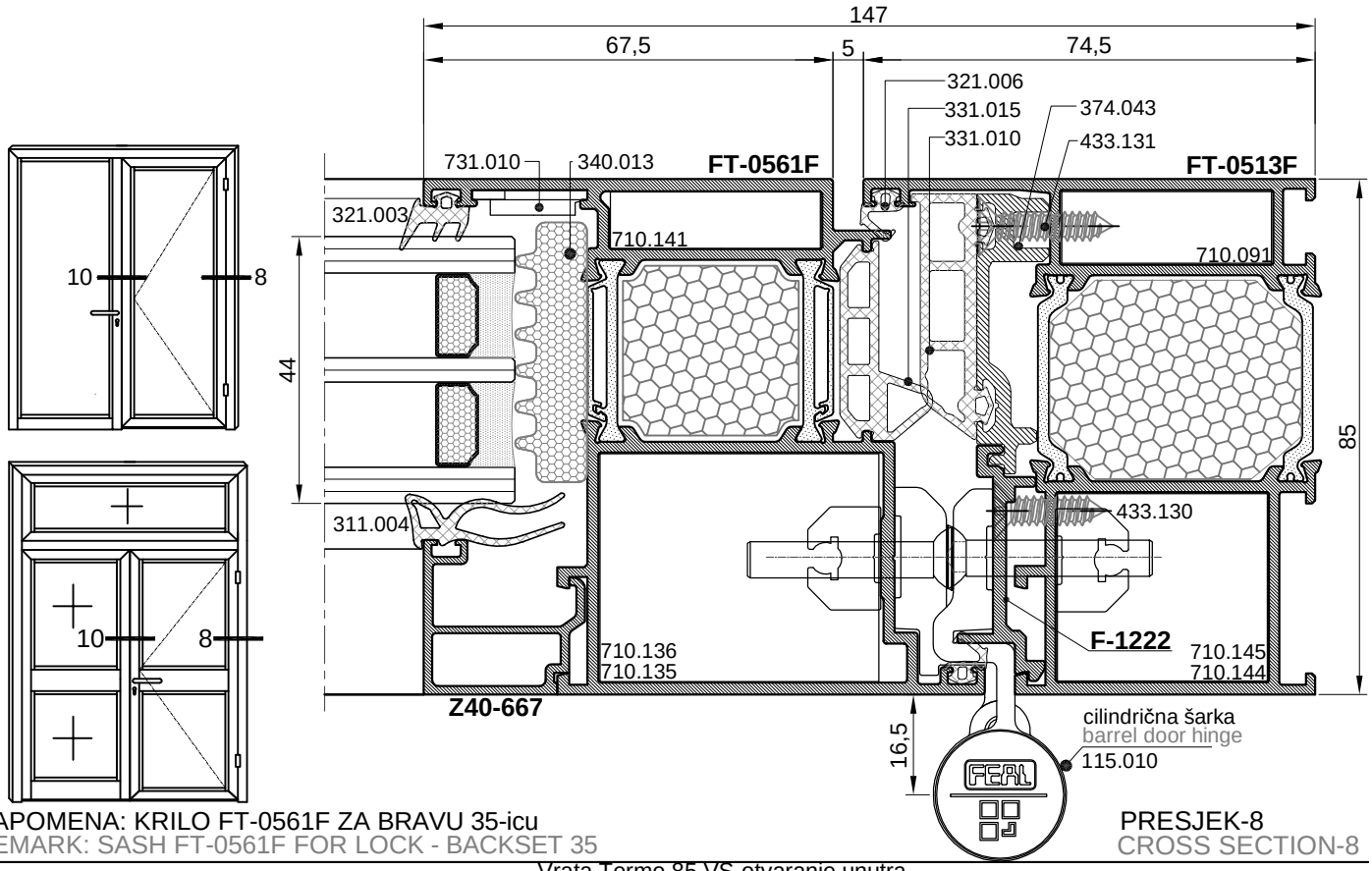

NAPOMENA: KRILO FT-0561F ZA BRAVU 35-icu
REMARK: SASH FT-0561F FOR LOCK - BACKSET 35

PRESJEK-8
CROSS SECTION-8

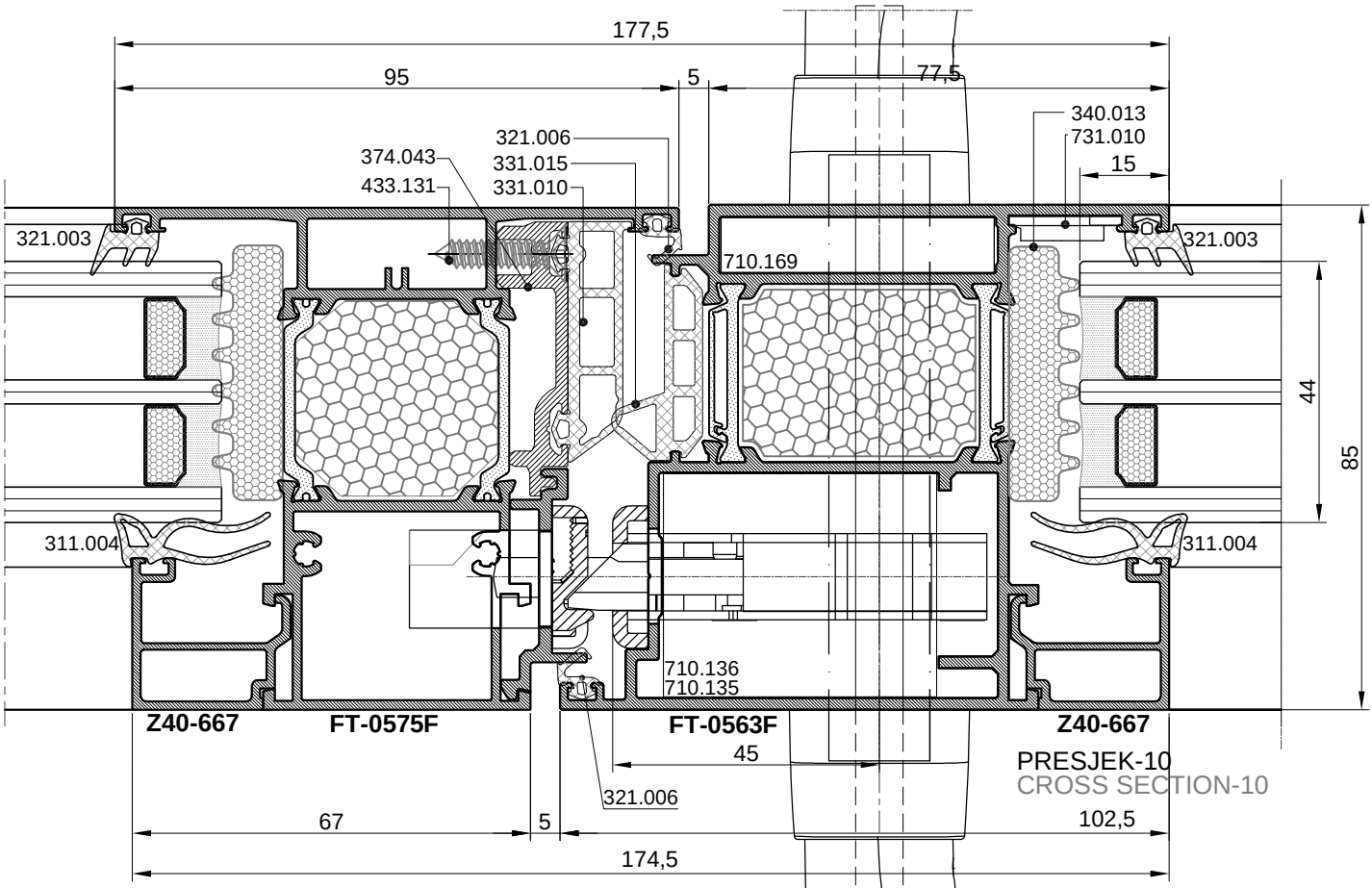

PRESJEK-10
CROSS SECTION-10

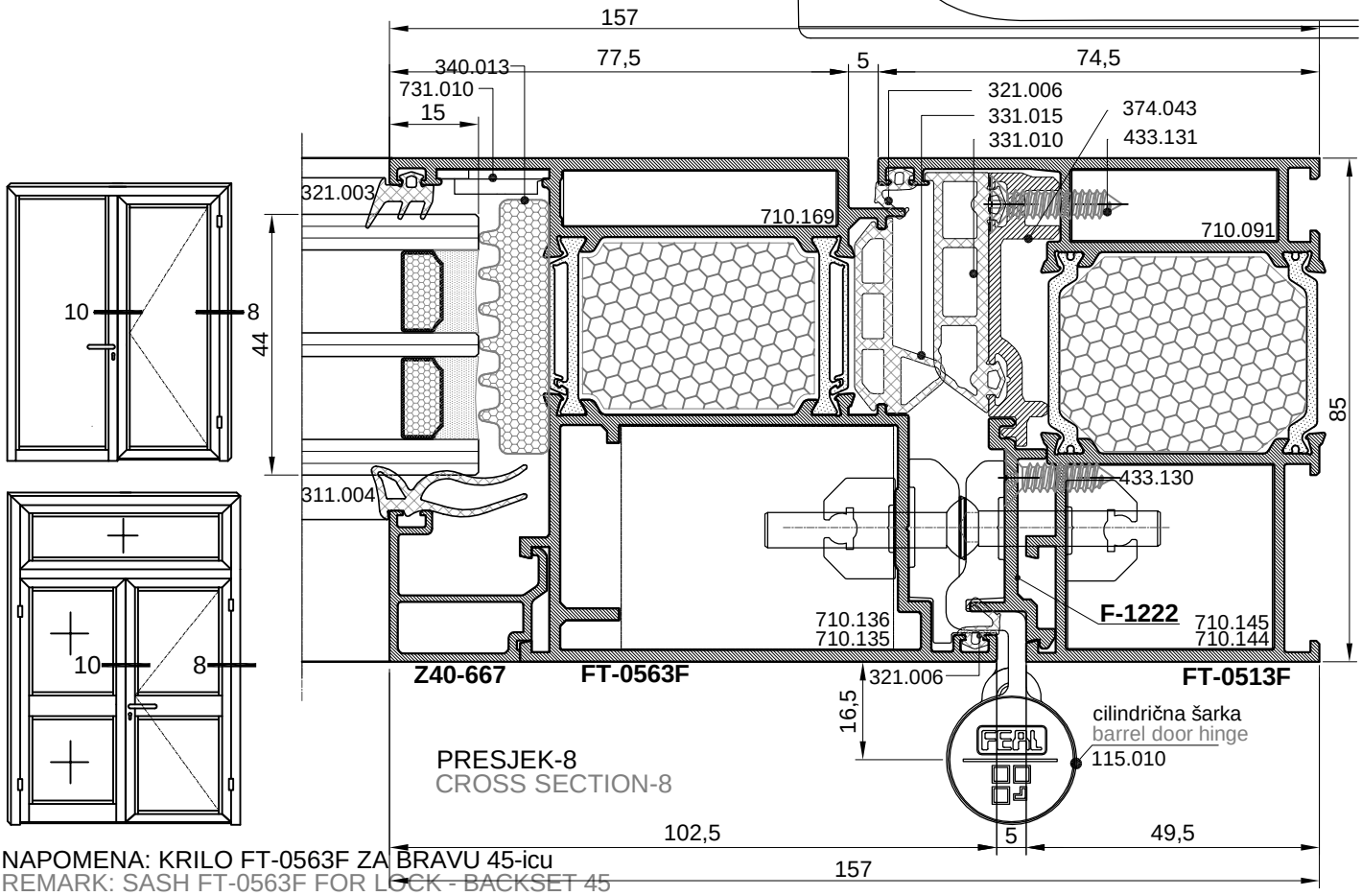

PRESJEK-8
CROSS SECTION-8

NAPOMENA: KRILO FT-0563F ZA BRAVU 45-icu
REMARK: SASH FT-0563F FOR LOCK - BACKSET 45

PRESJEK-10
CROSS SECTION-10

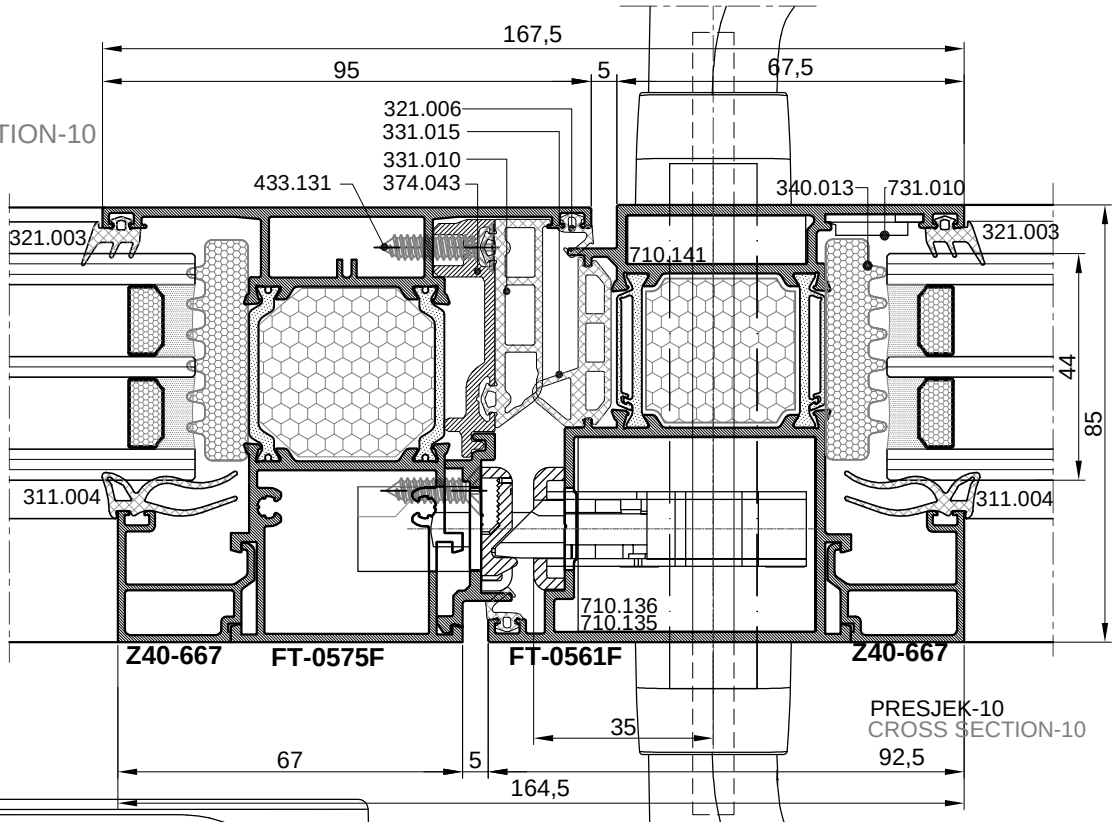

PRESJEK-10
CROSS SECTION-10

PRESJEK-3
CROSS SECTION-3

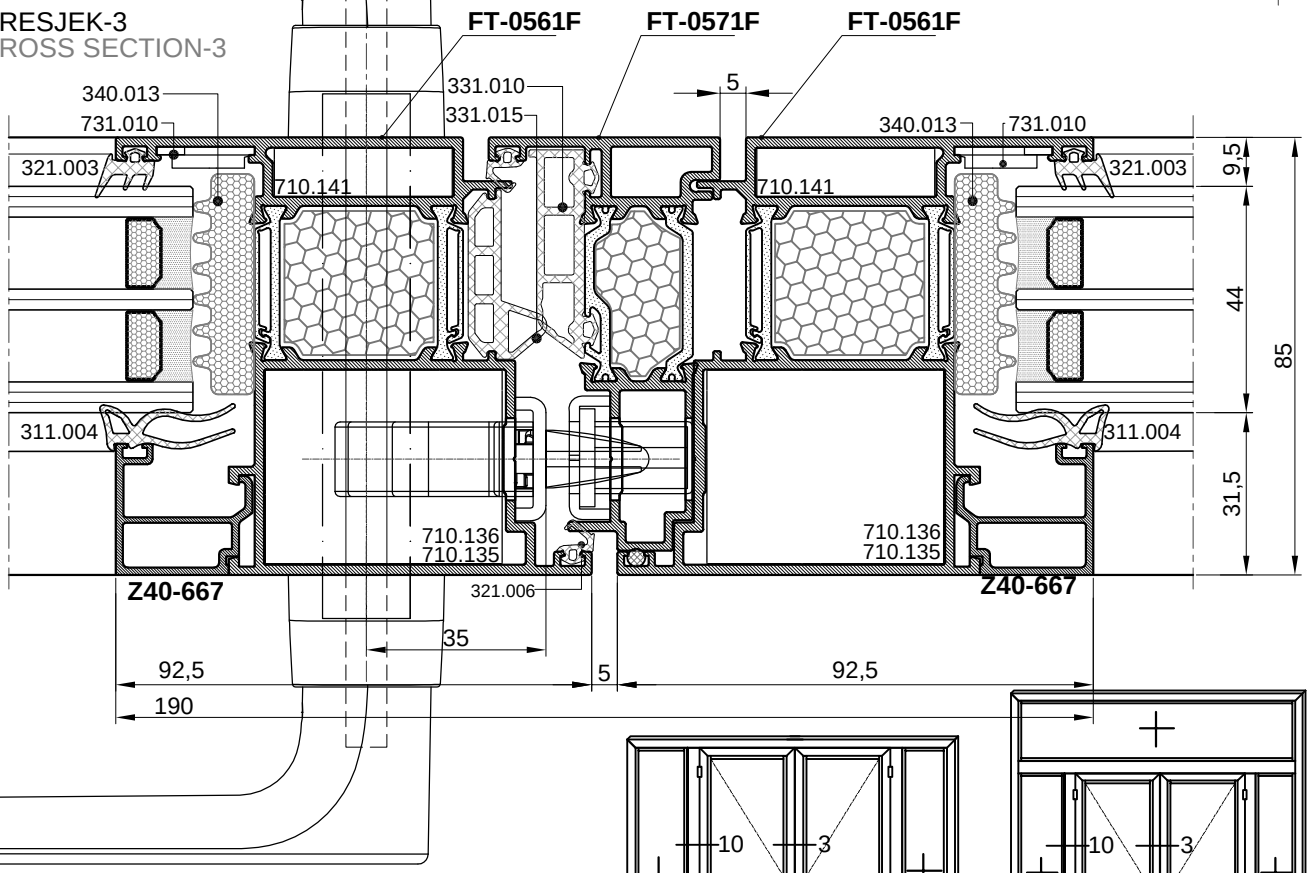

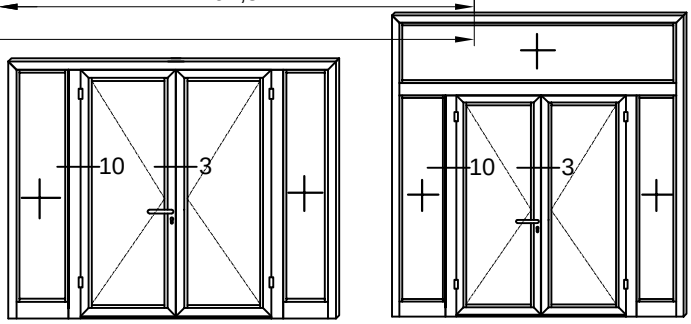

NAPOMENA: KRILO FT-0561F ZA BRAVU 35-icu
REMARK: SASH FT-0561F FOR LOCK -BACKSET 35

PRESJEK-10
CROSS SECTION-10

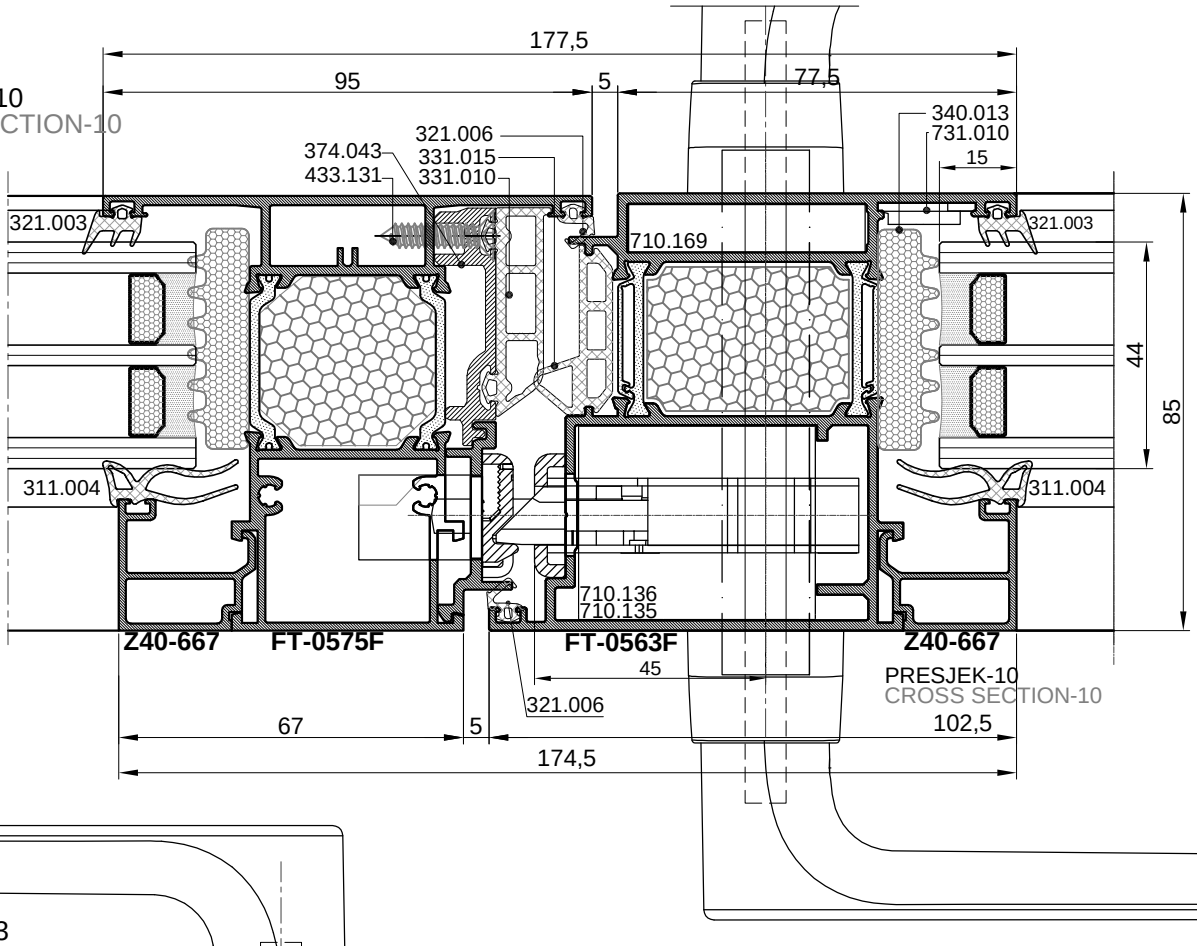

PRESJEK-10
CROSS SECTION-10

PRESJEK-3
CROSS SECTION-3

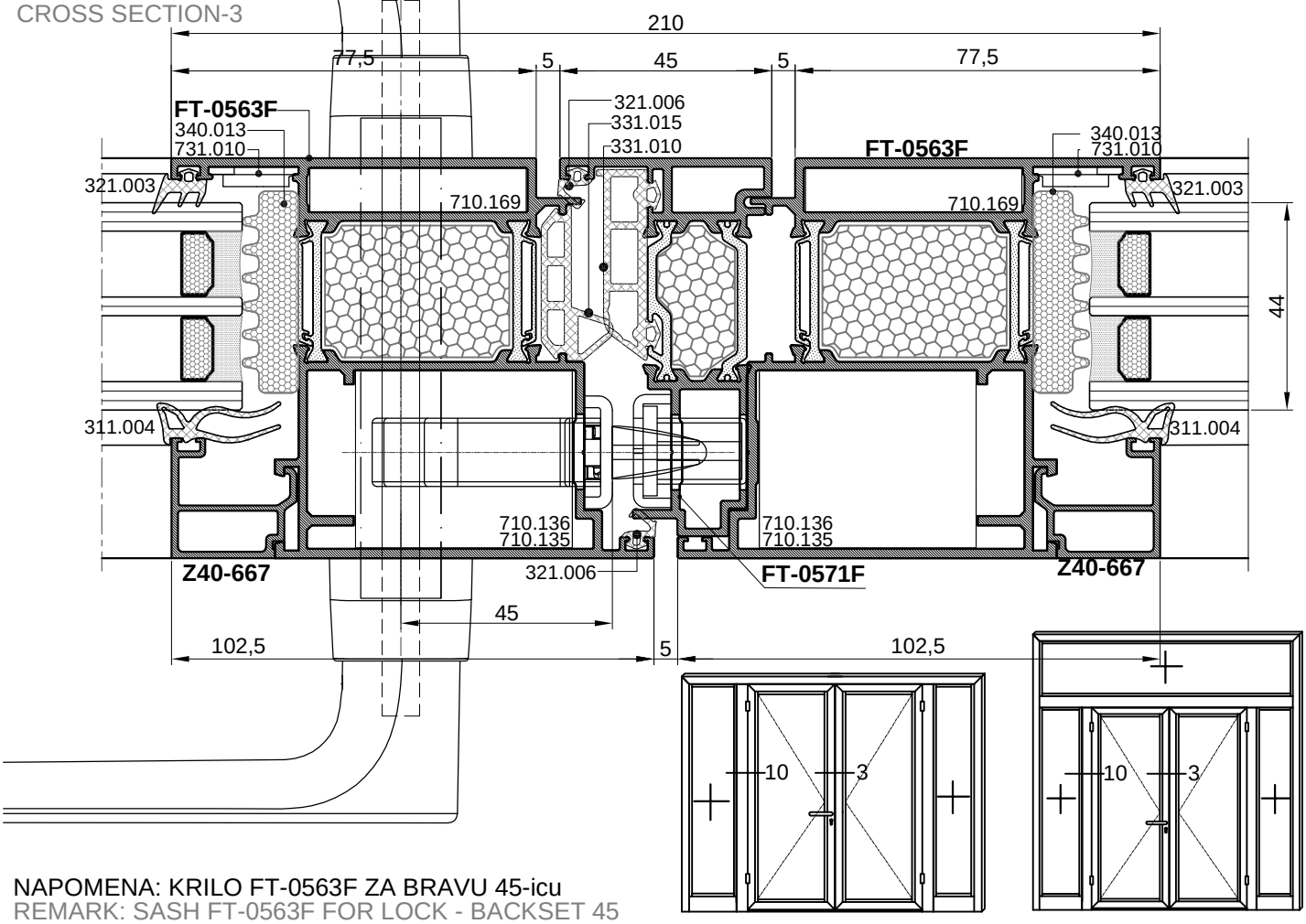

NAPOMENA: KRILO FT-0563F ZA BRAVU 45-icu
REMARK: SASH FT-0563F FOR LOCK - BACKSET 45

PRESJEK-4
CROSS SECTION-4

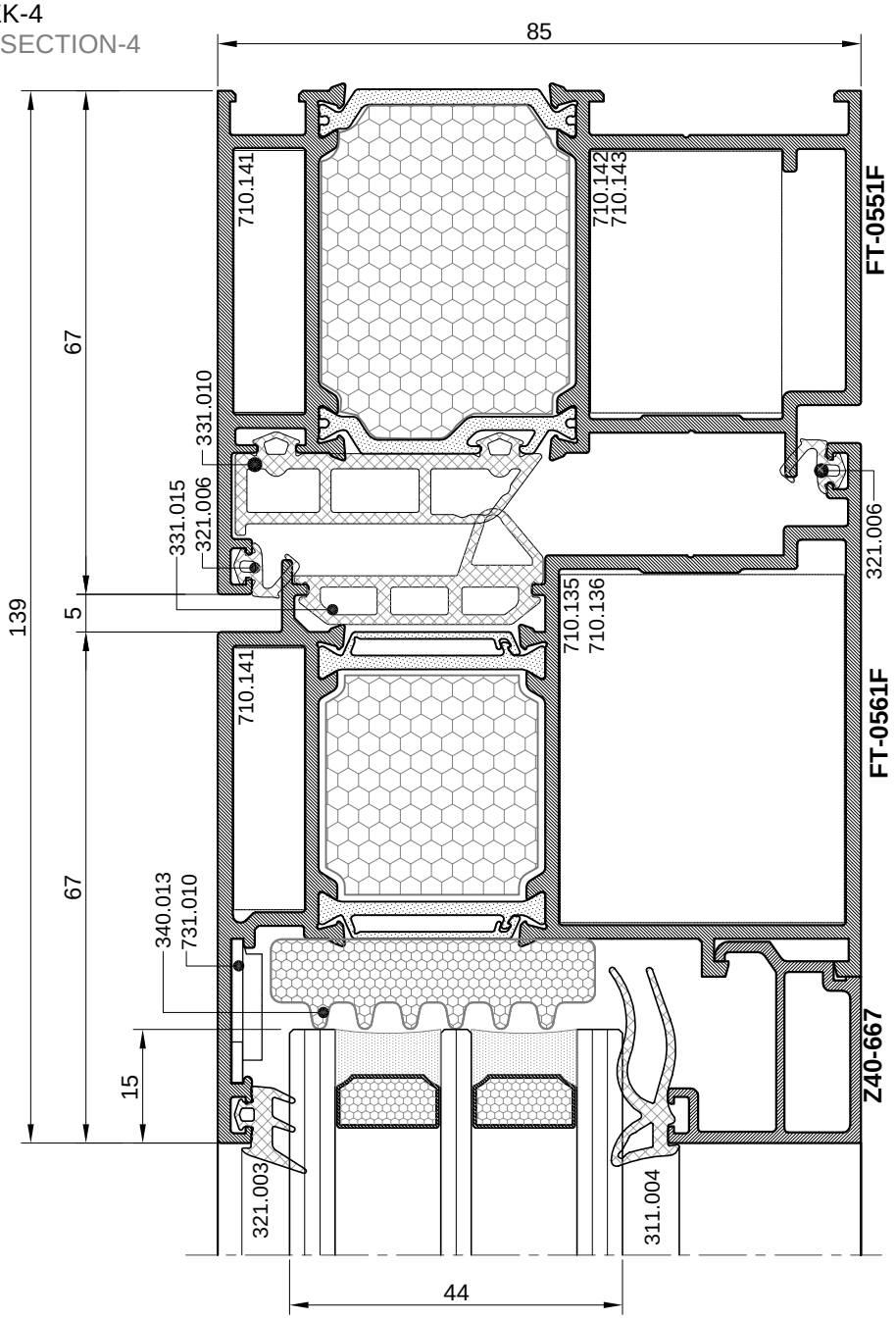

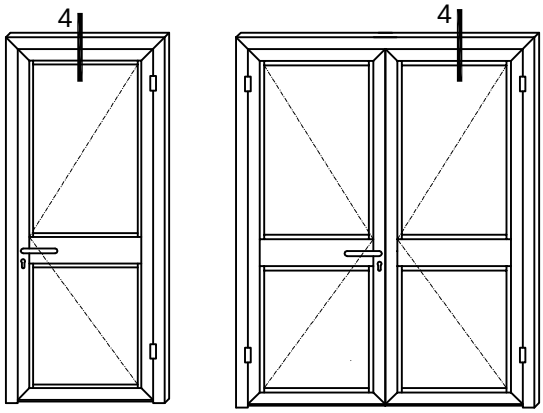

NAPOMENA: KRILO FT-0561F ZA BRAVU 35-icu
REMARK: SECTION FT-0561F FOR LOCK - BACKSET 35

PRESJEK-4
CROSS SECTION-4

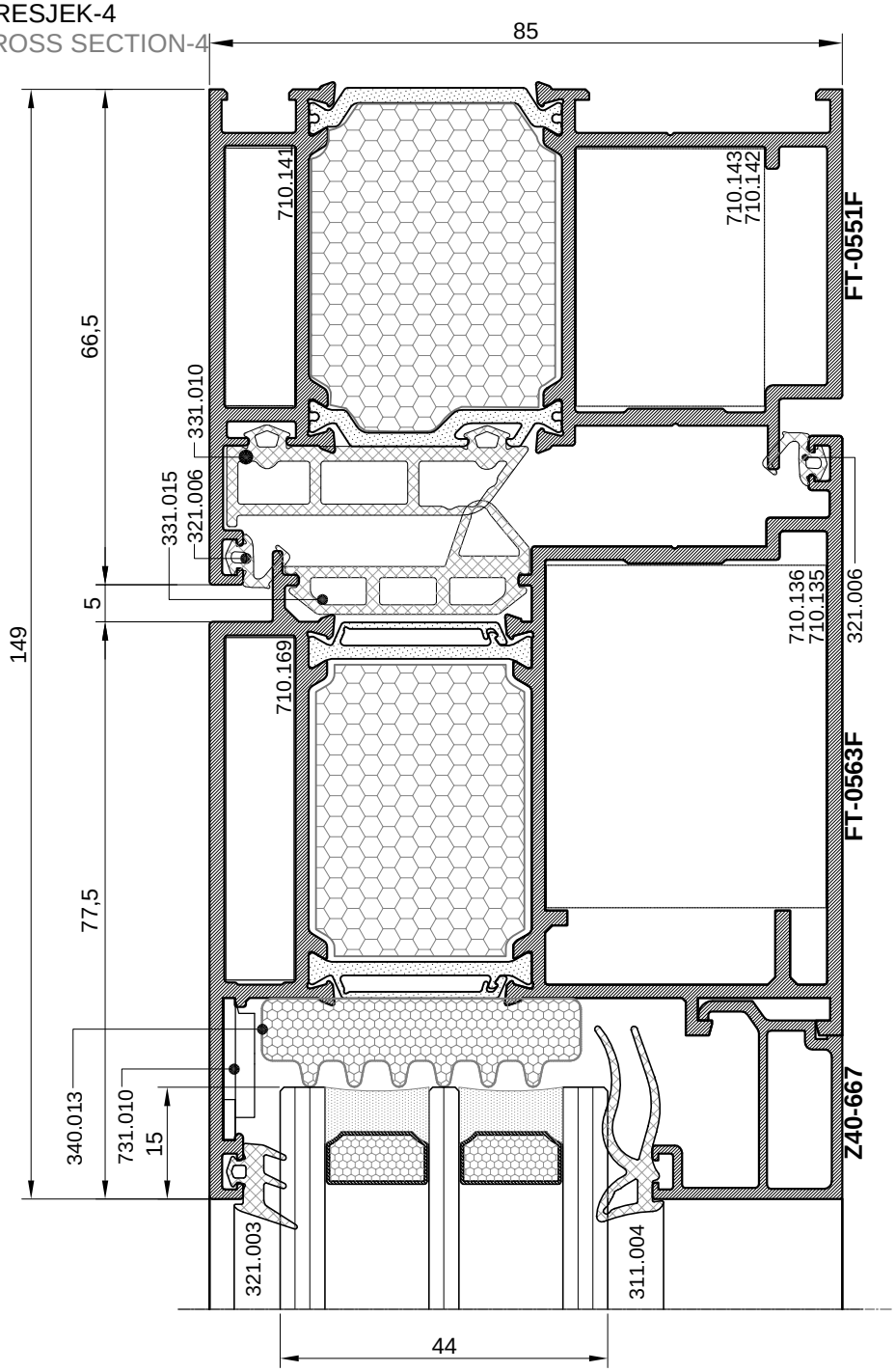

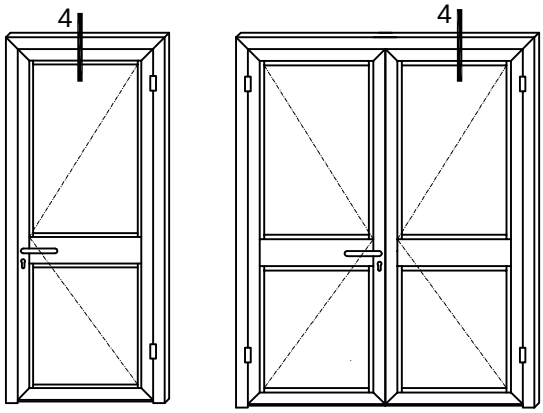

NAPOMENA: KRILO FT-0563F ZA BRAVU 45-icu
REMARK: SASH FT-0563F FOR LOCK - BACKSET 45

PRESJEK-5
CROSS SECTION-5

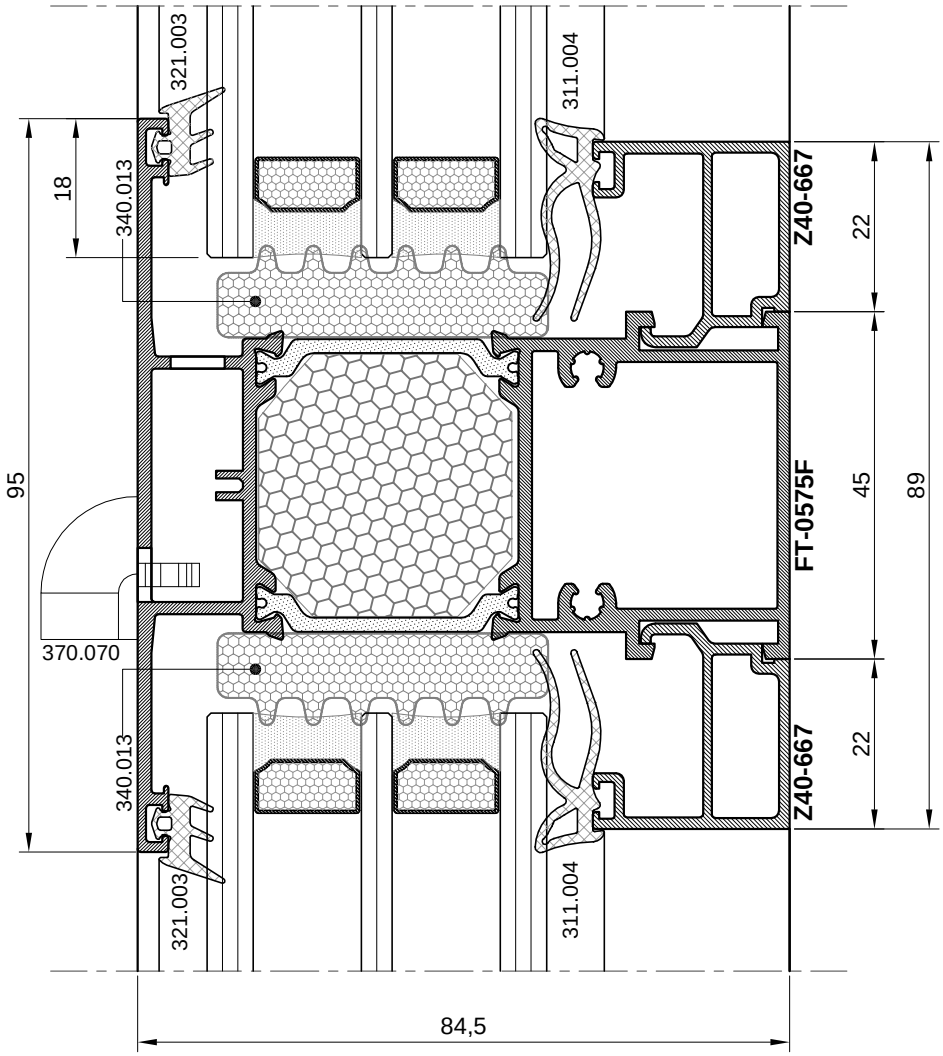

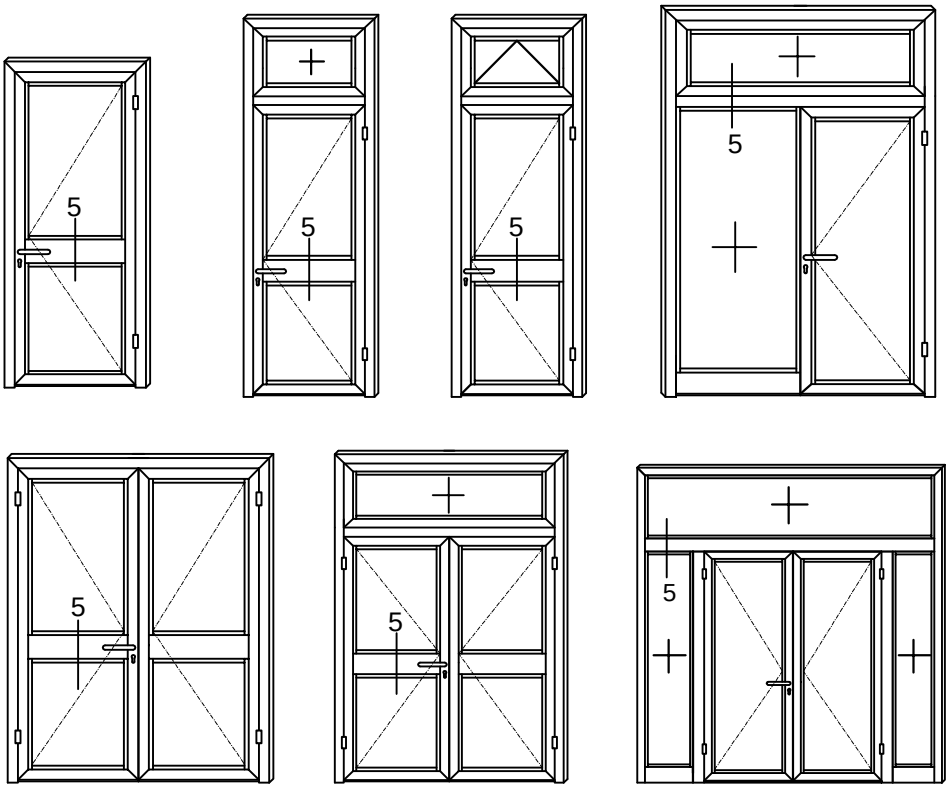

PRESJEK-6
CROSS SECTION-6

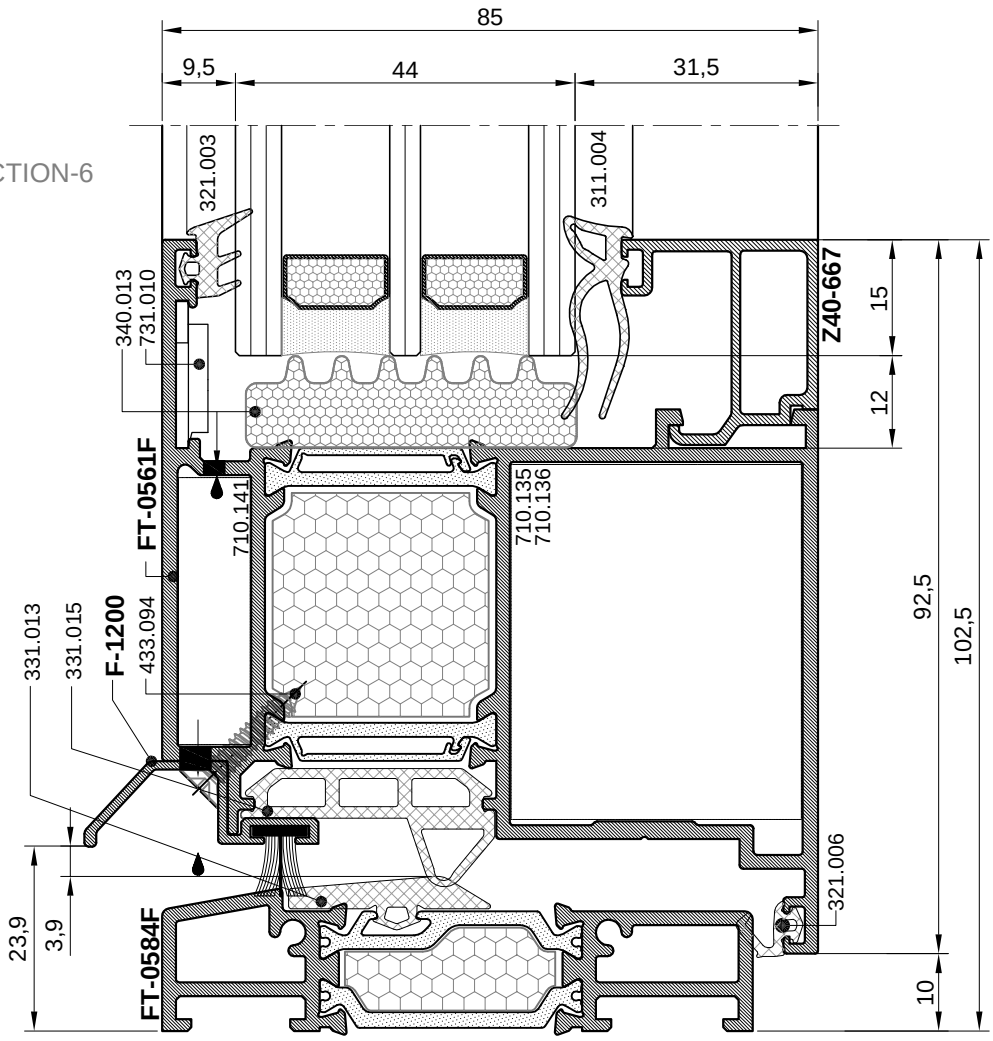

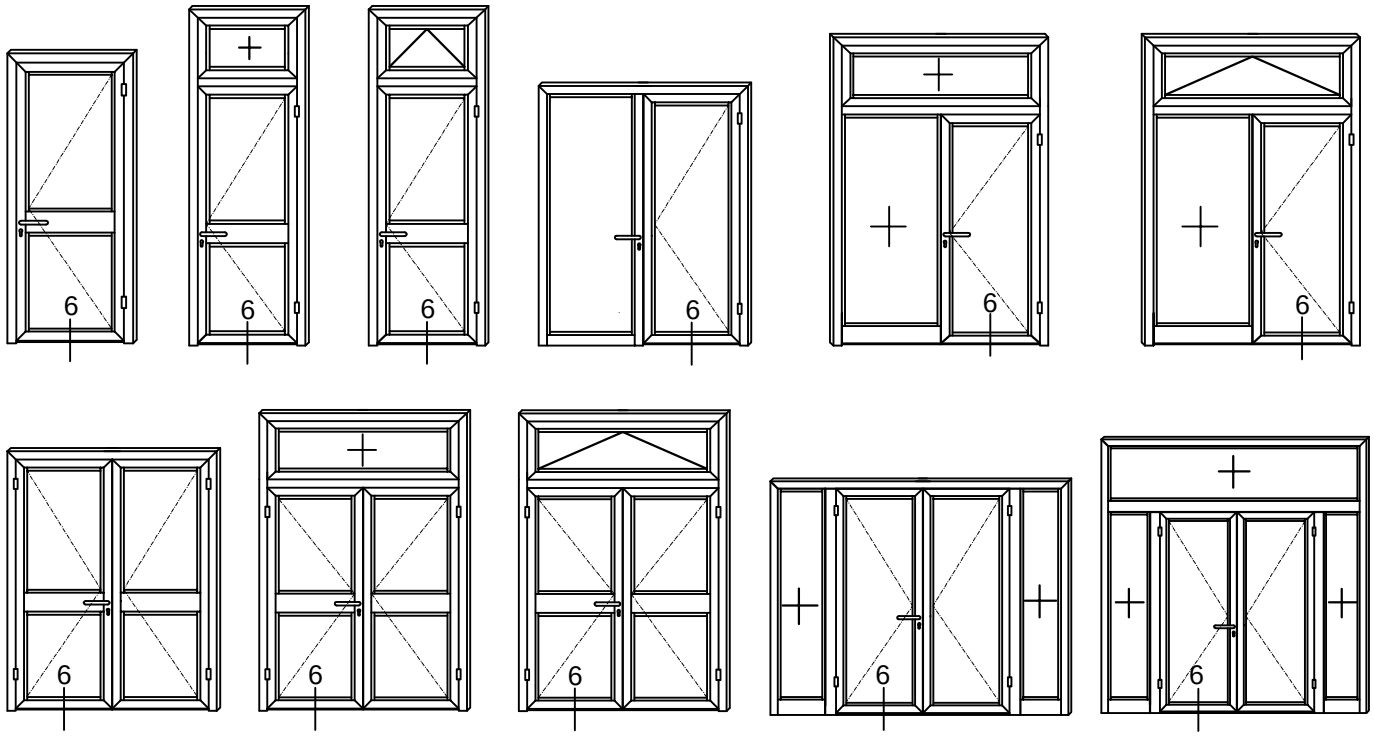

NAPOMENA: KRILO FT-0561F ZA BRAVU 35-icu
REMARK: SASH FT-0561F FOR LOCK - BACKSET 35

PRESJEK-6
CROSS SECTION-6

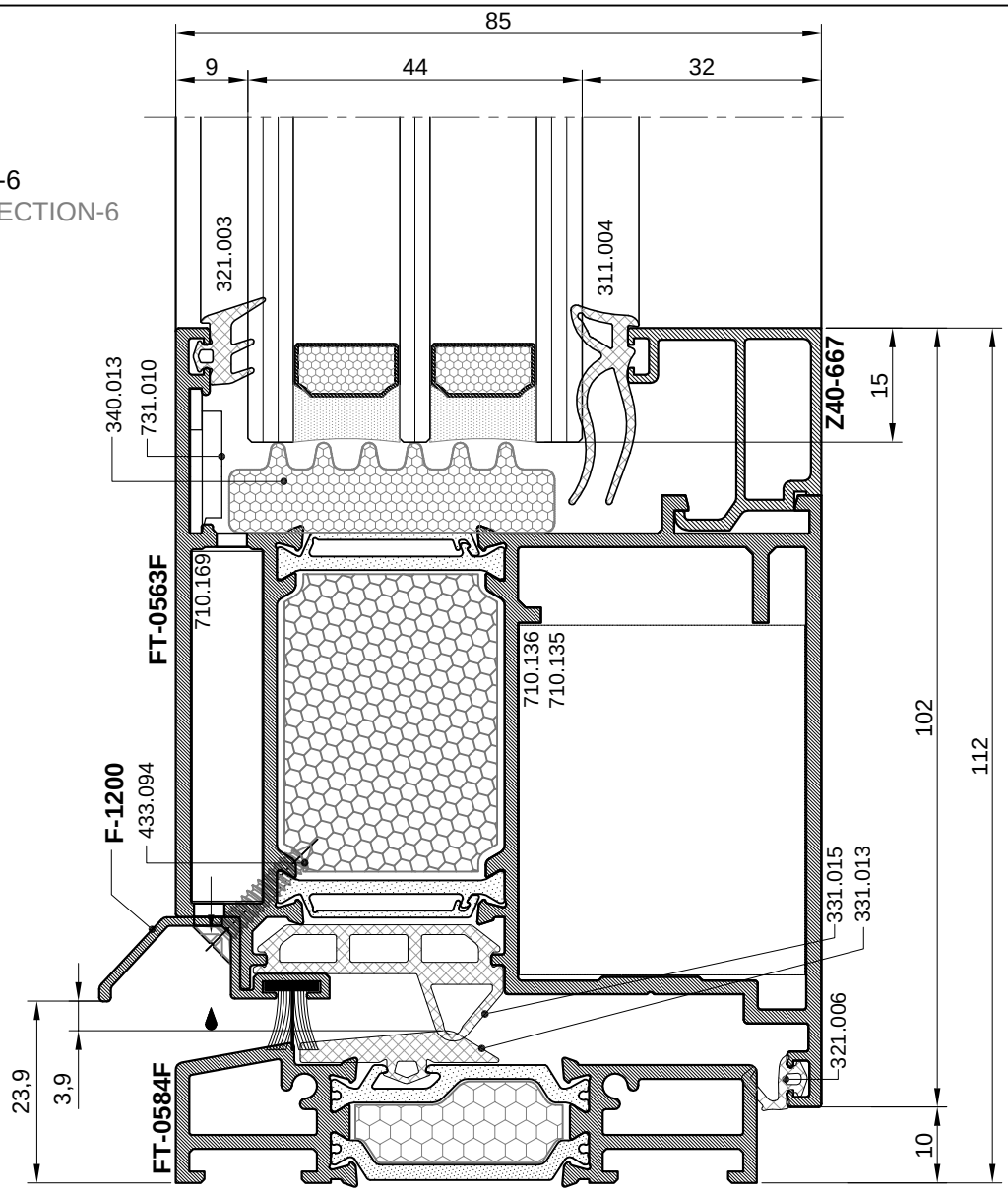

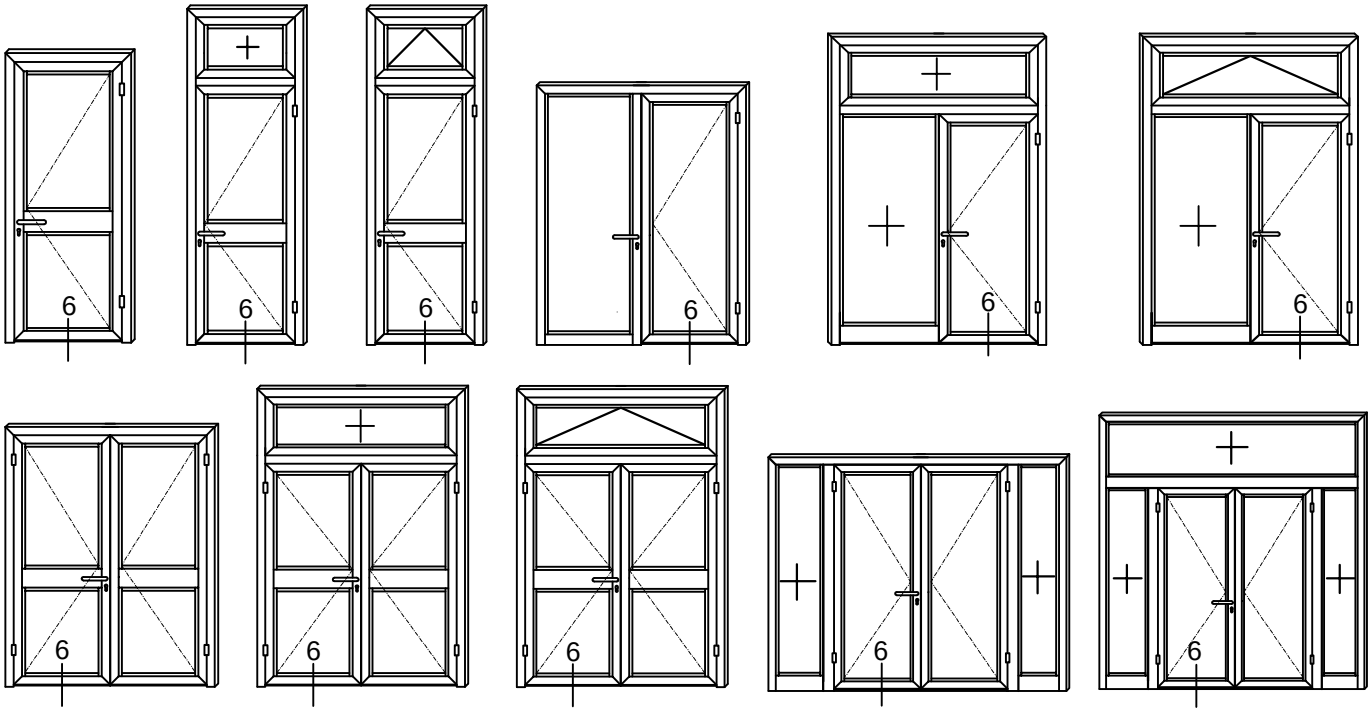

NAPOMENA: KRILO FT-0563F ZA BRAVU 45-icu
REMARK: SASH FT-0563F FOR LOCK - BACKSET 45

PRESJEK-11
CROSS SECTION-11

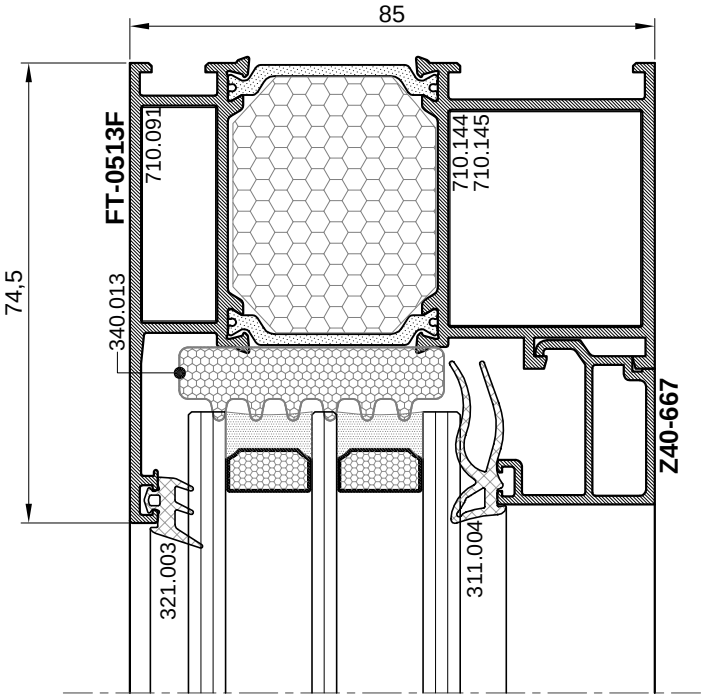

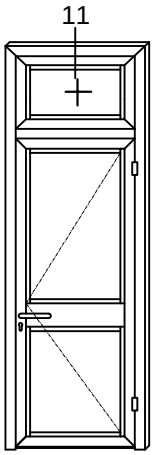

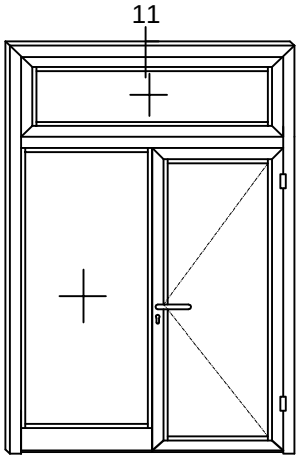

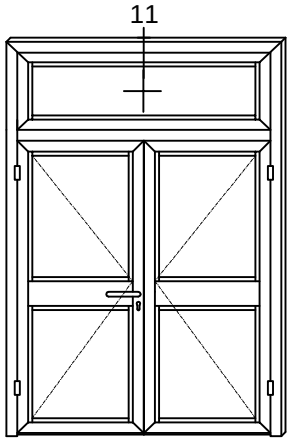

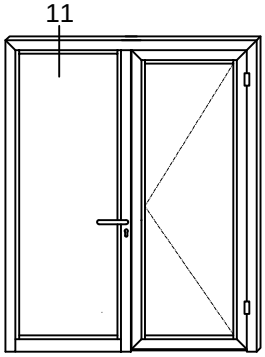

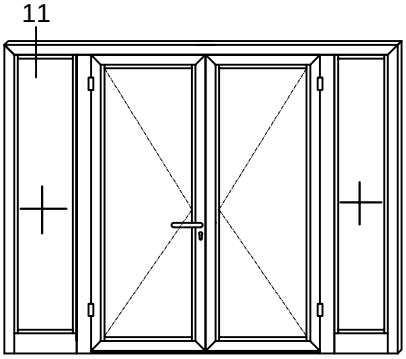

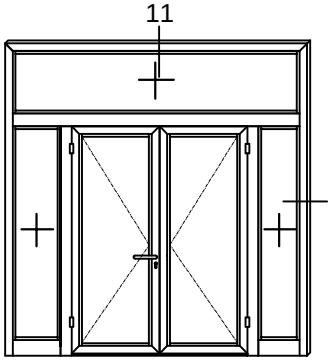

PRESJEK-12
CROSS SECTION-12

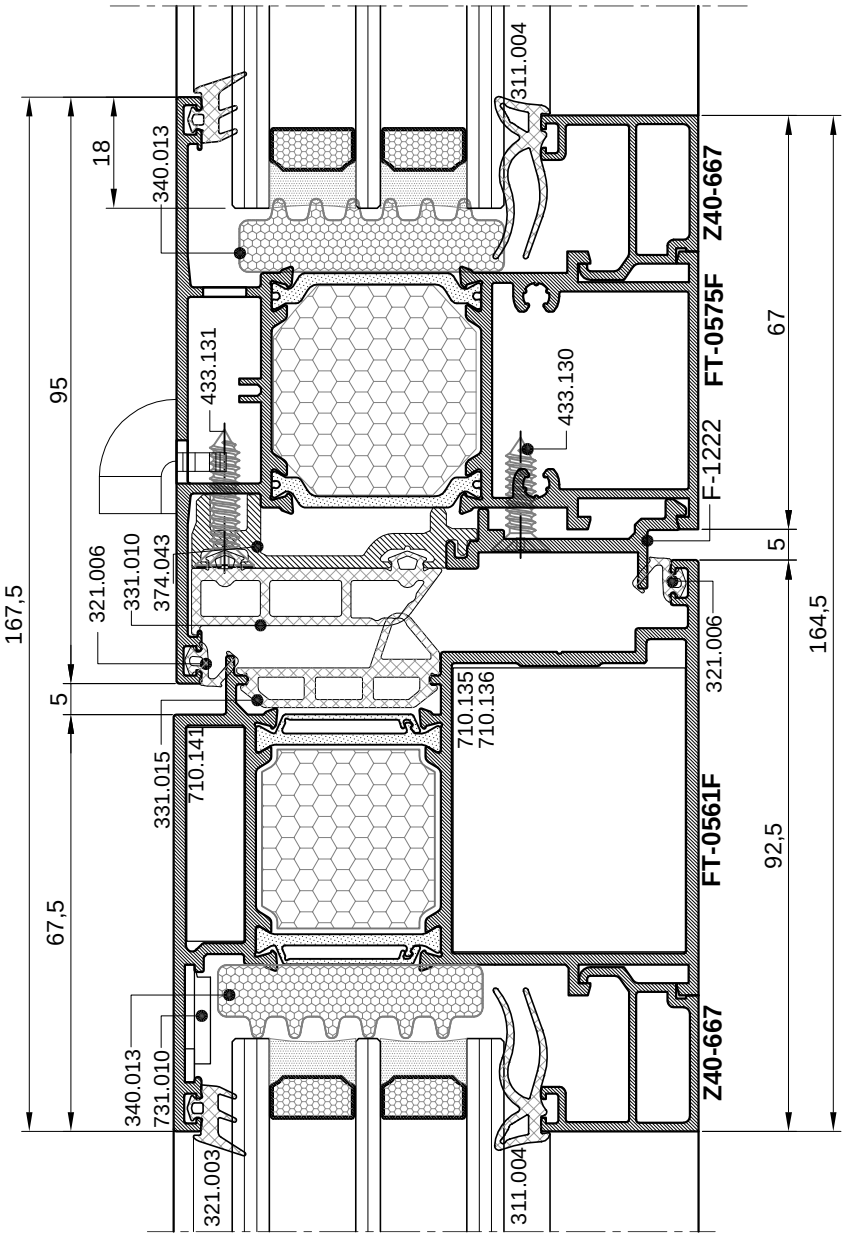

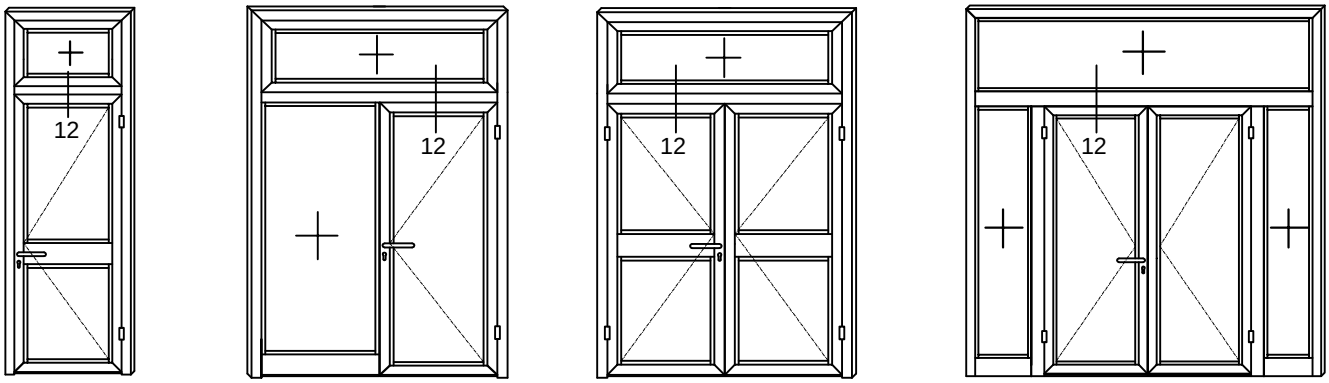

NAPOMENA: KRILO FT-0561F ZA BRAVU 35-icu
REMARK: SASH FT-0561F FOR LOCK -BACKSET 35

PRESJEK-12
CROSS SECTION-12

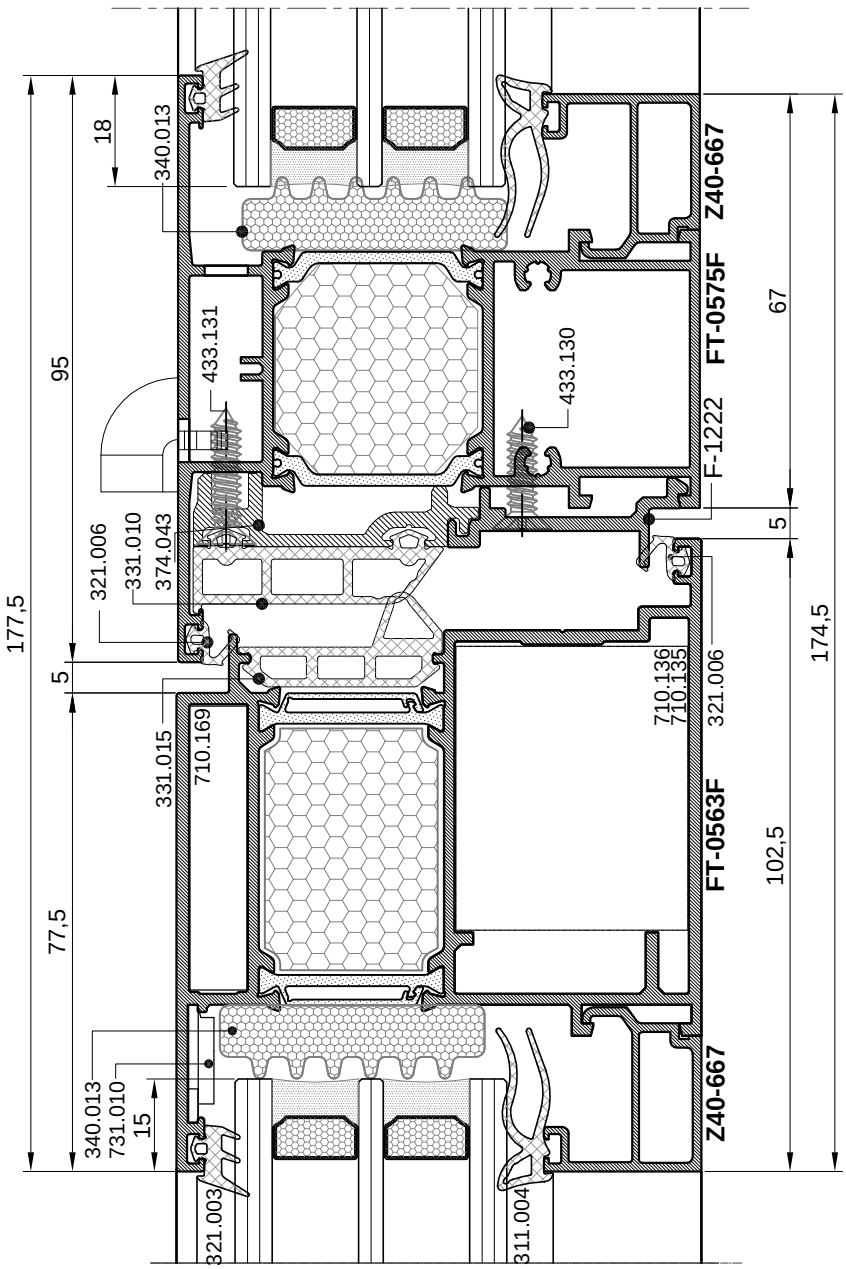

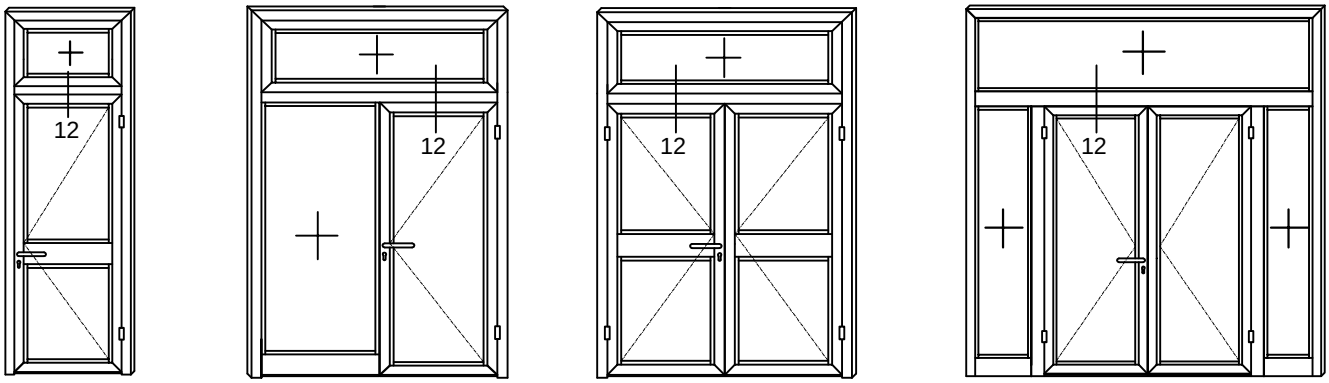

NAPOMENA: KRILO FT-0563F ZA BRAVU 45-icu
REMARK: SASH FT-0563F FOR LOCK -BACKSET 45

PRESJEK - 6A
CROSS SECTION - 6A

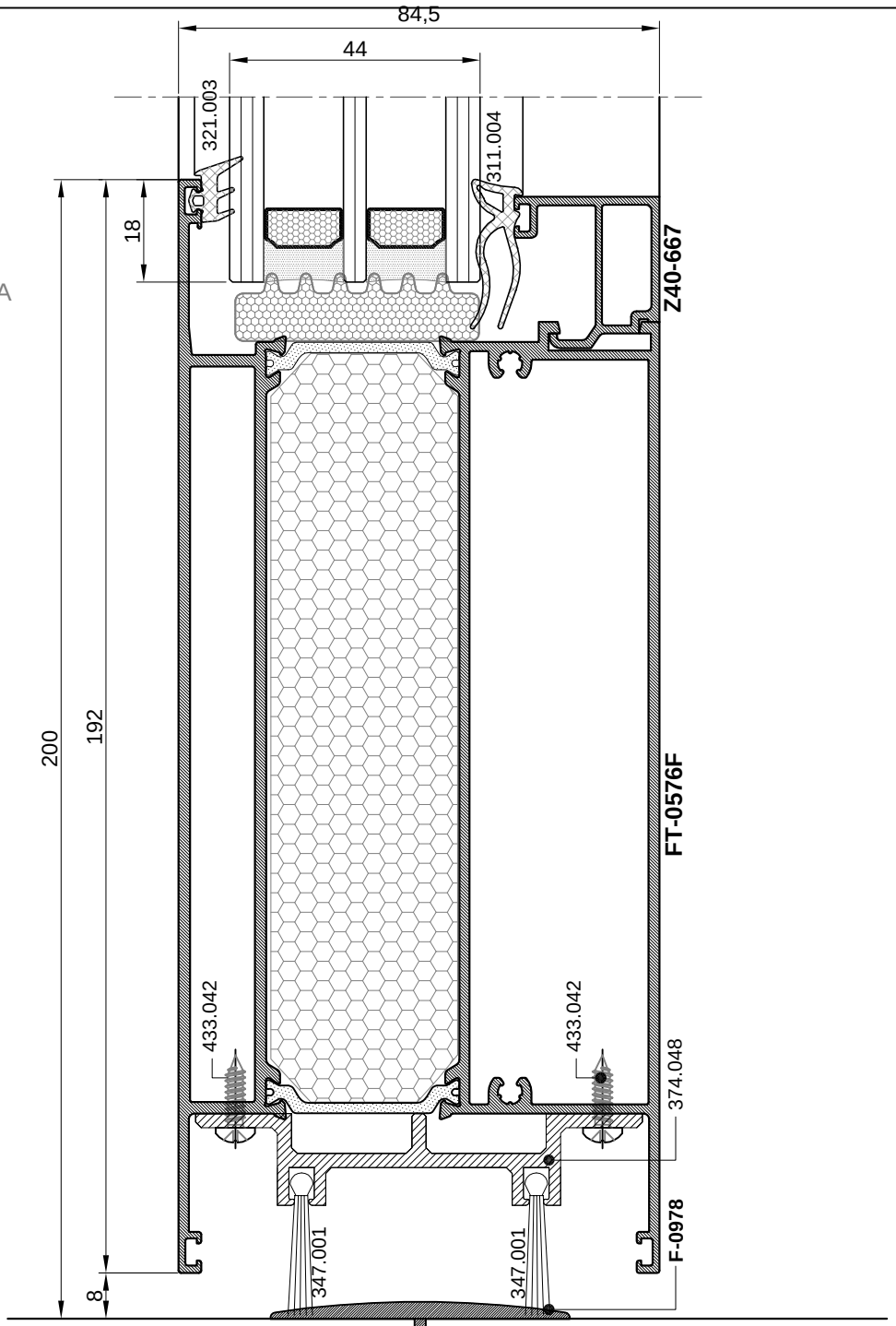

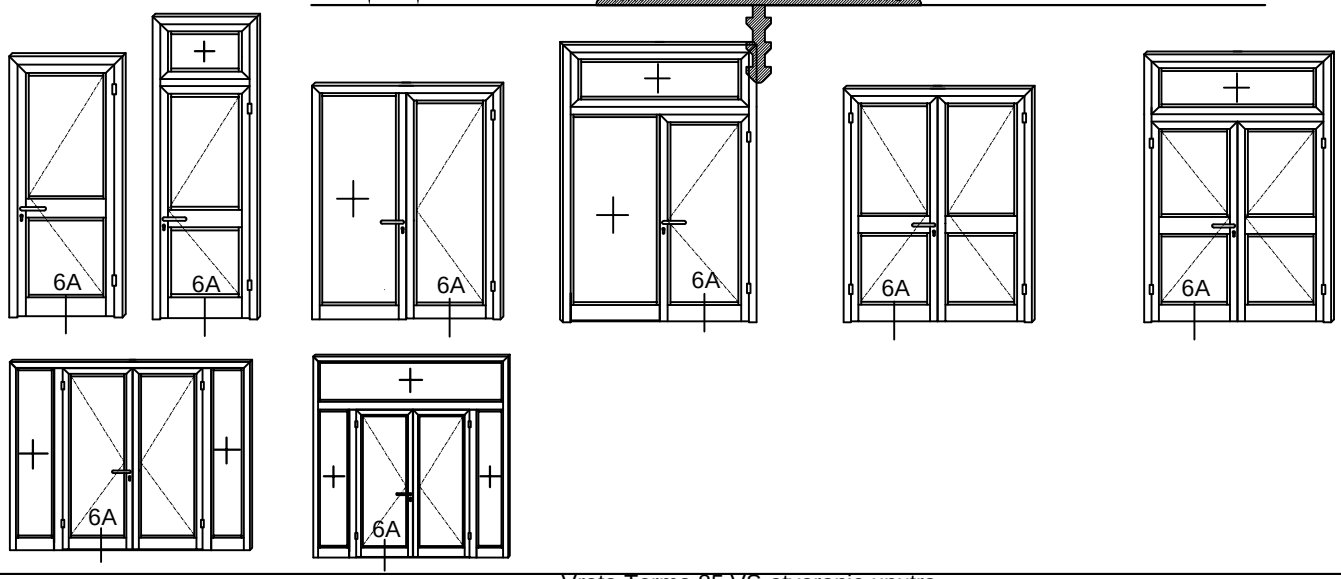

PRESJEK-14
CROSS SECTION-14

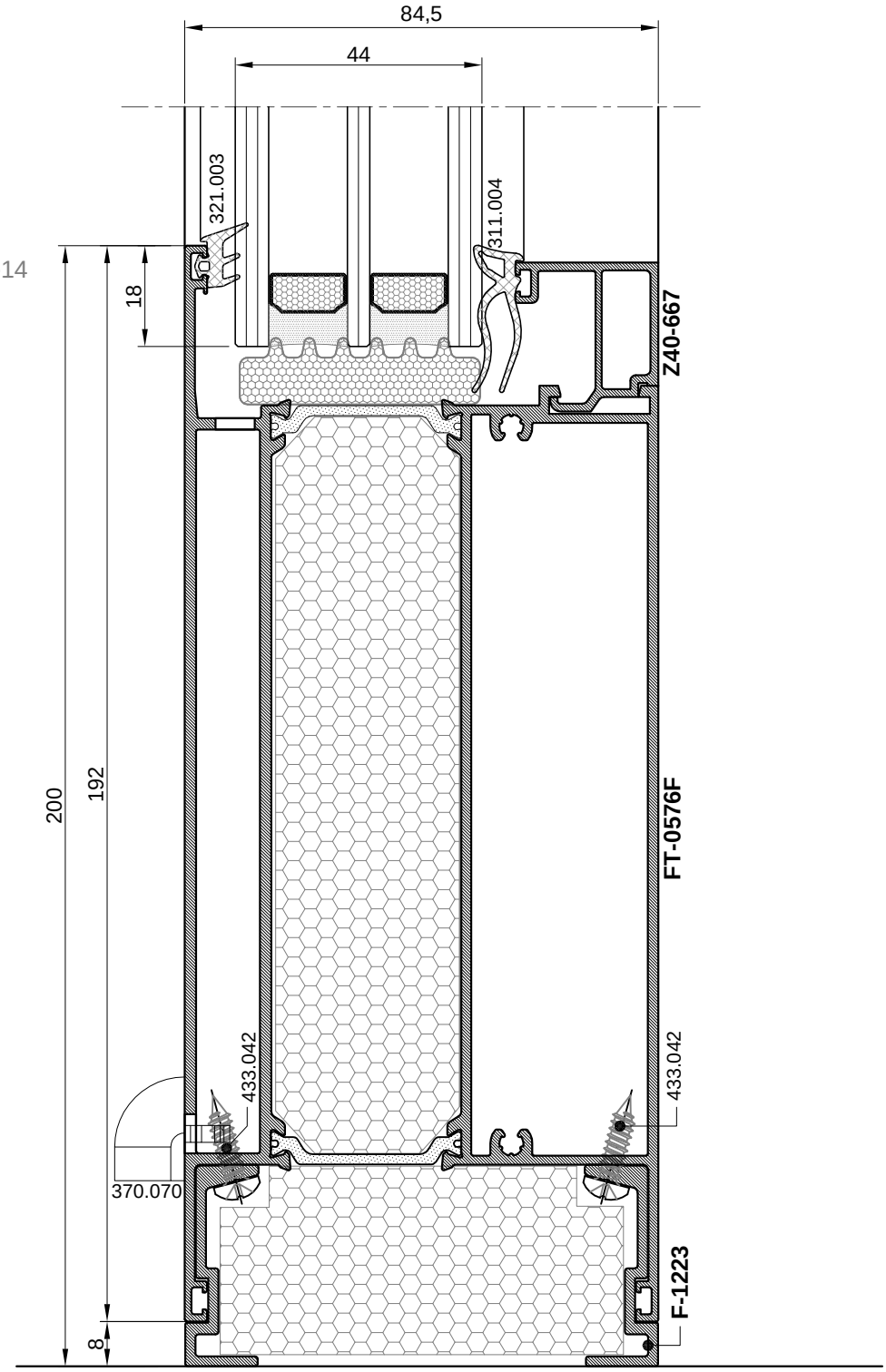

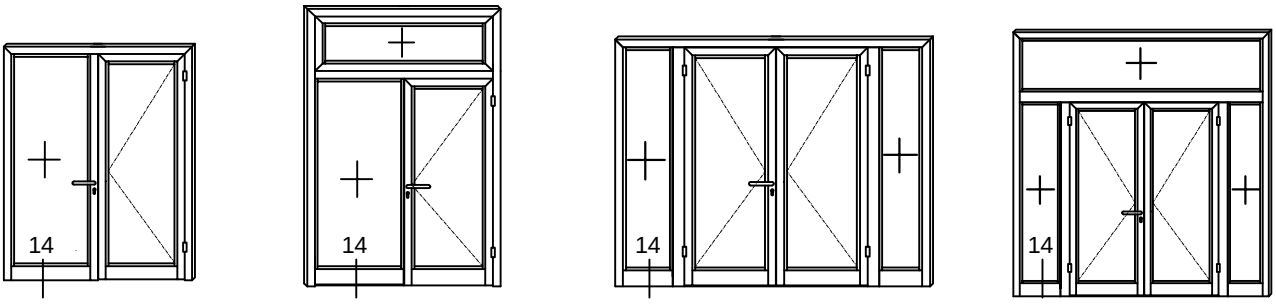

PRESJEK-13
CROSS SECTION-13

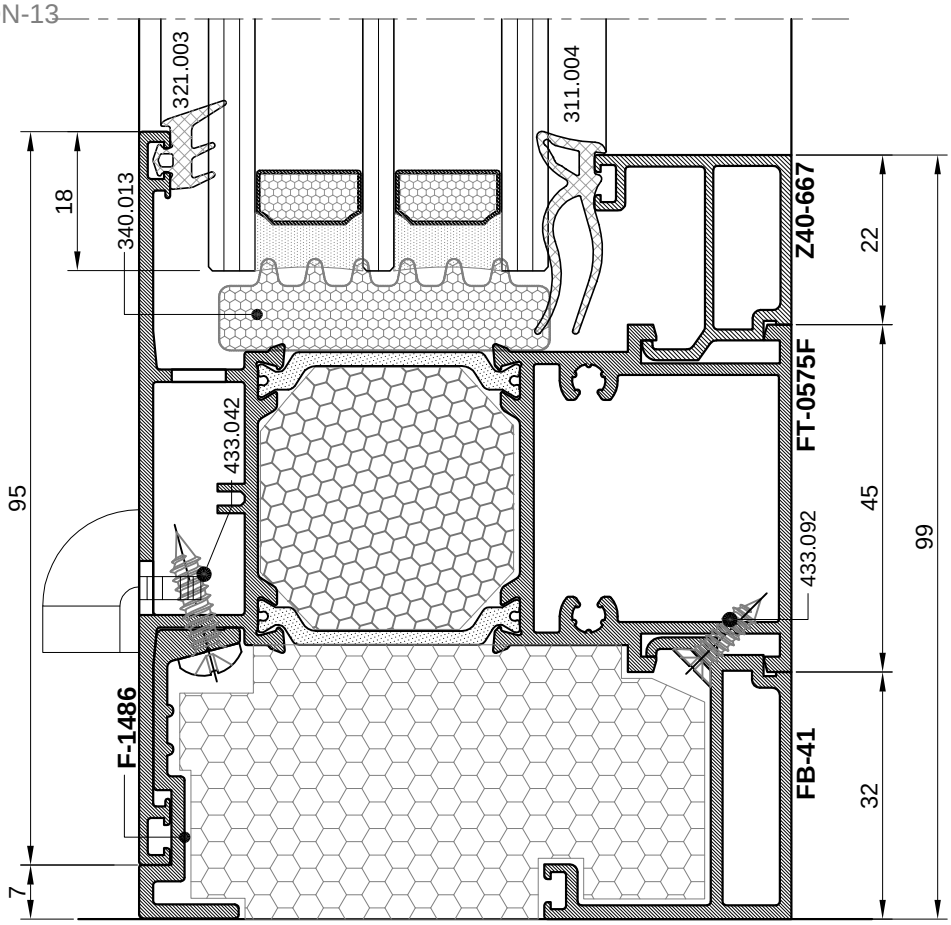

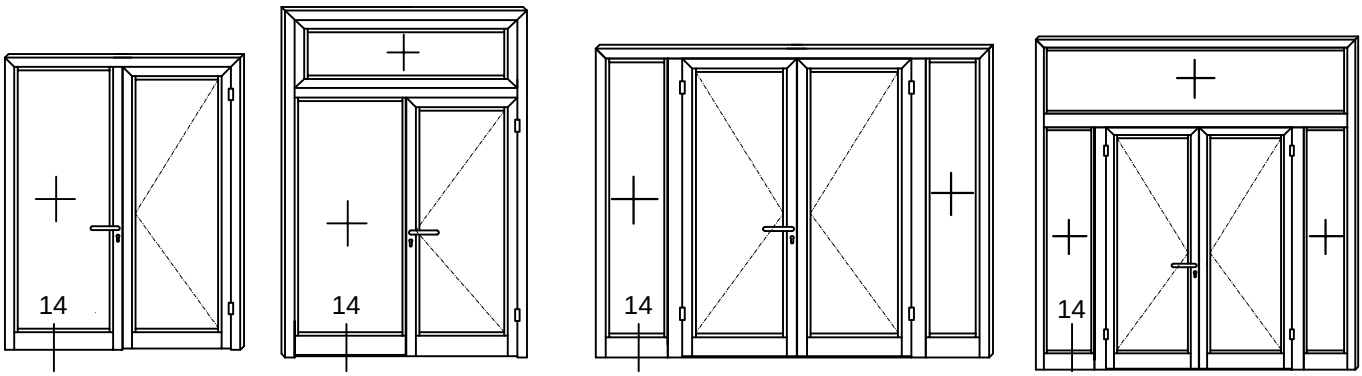

PRESJEK-13
CROSS SECTION-13

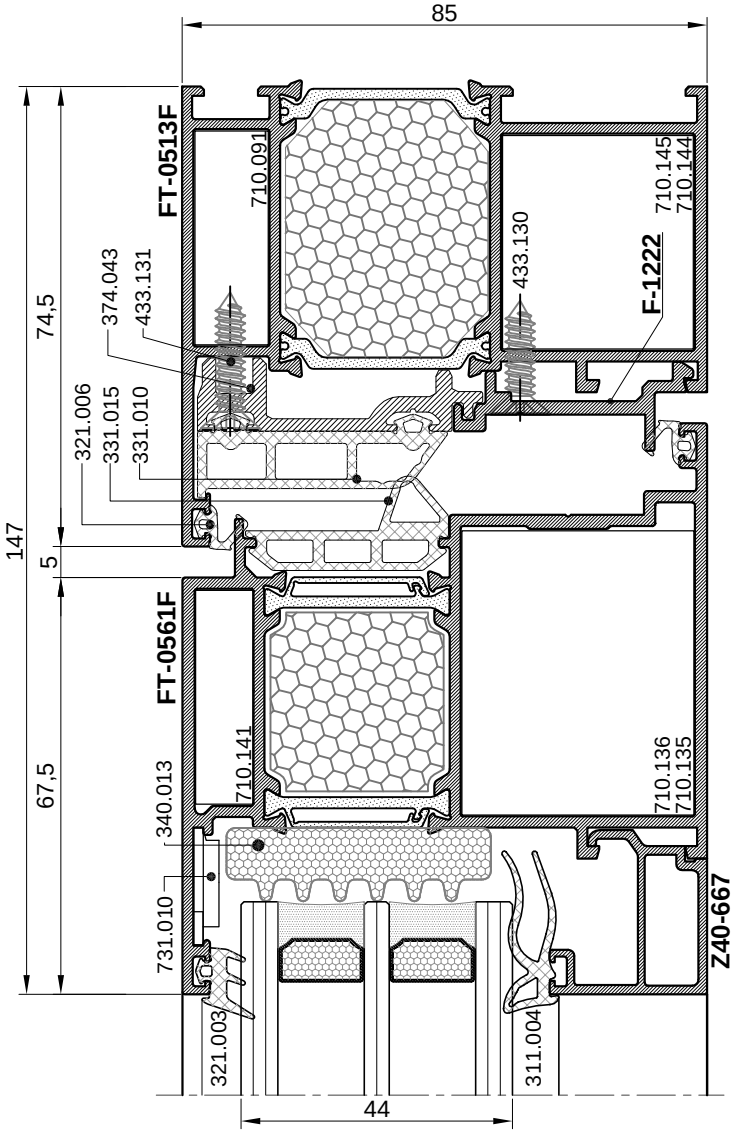

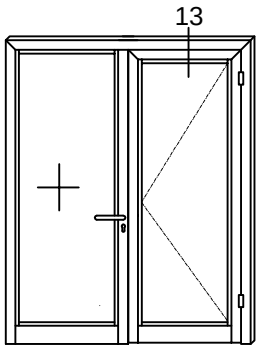

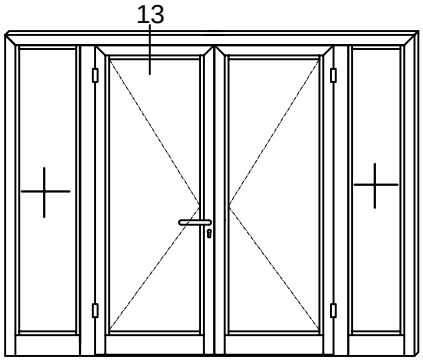

NAPOMENA: KRILO FT-0561F ZA BRAVU 35-icu
REMARK: SASH FT-0561F FOR LOCK -BACKSET 35

PRESJEK-13
CROSS SECTION-13

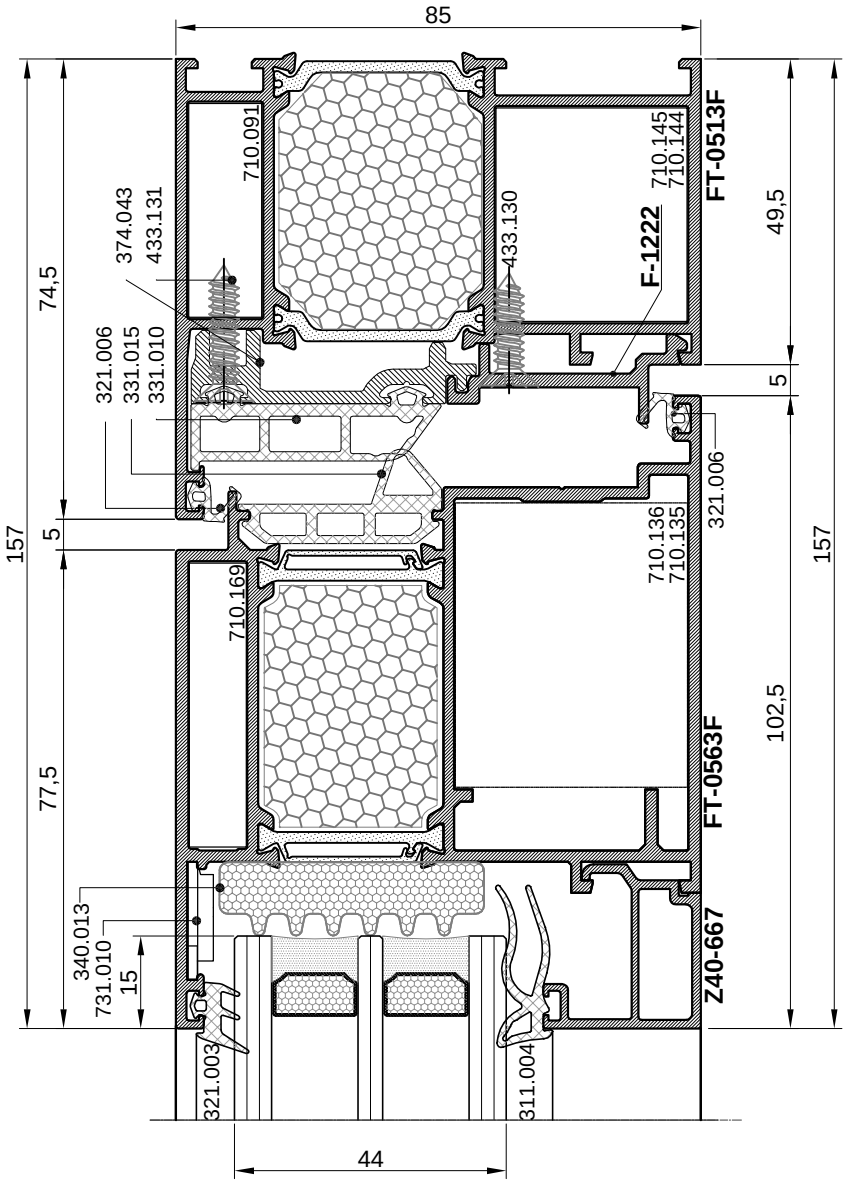

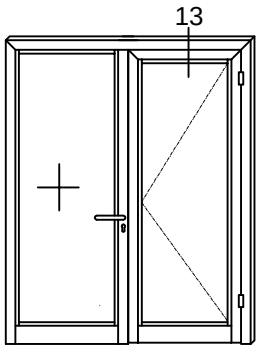

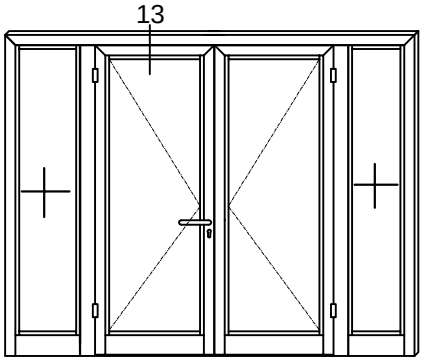

NAPOMENA: KRILO FT-0563F ZA BRAVU 45-icu
REMARK: SASH FT-0563F FOR LOCK -BACKSET 45

PRESJEK-17
CROSS SECTION-17

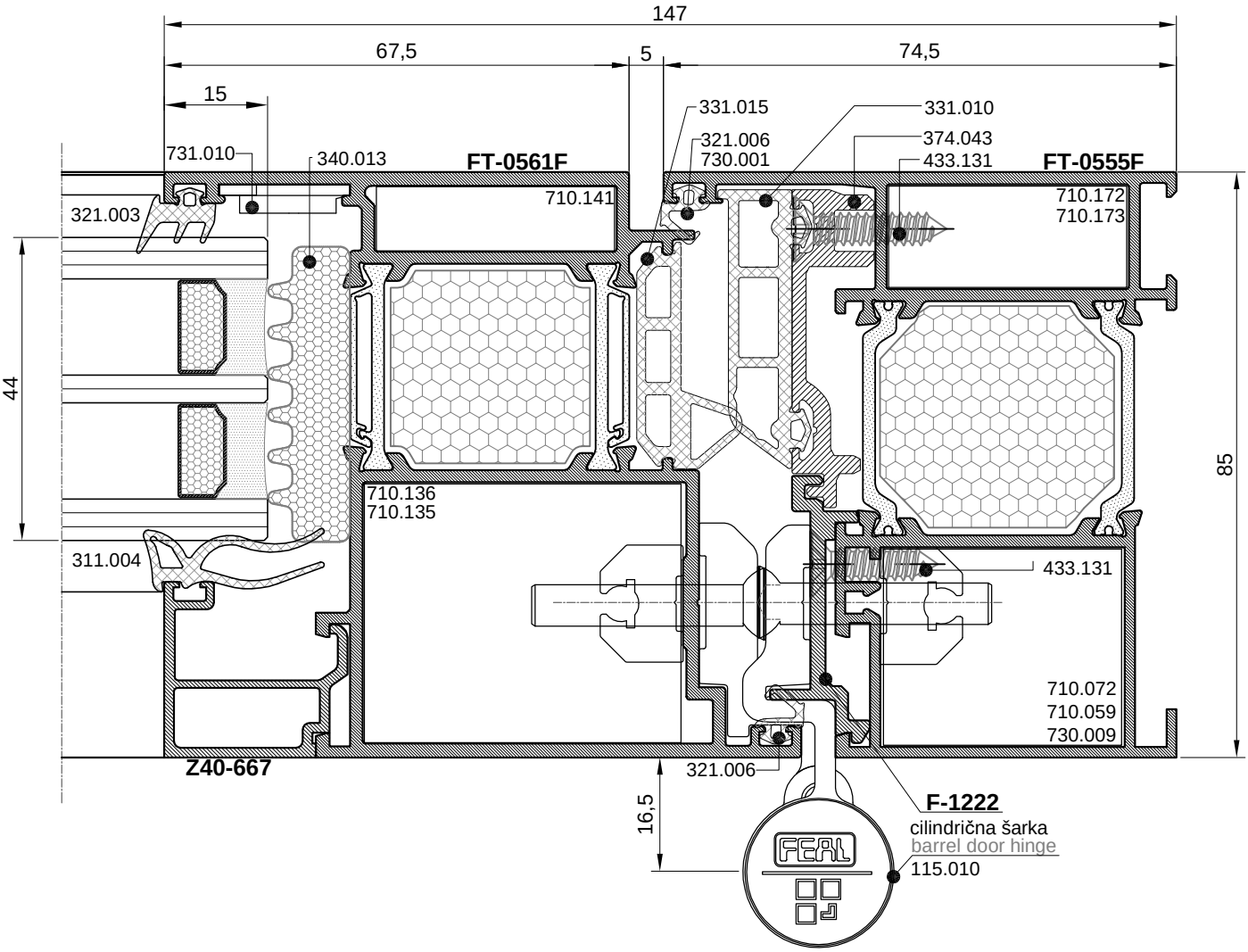

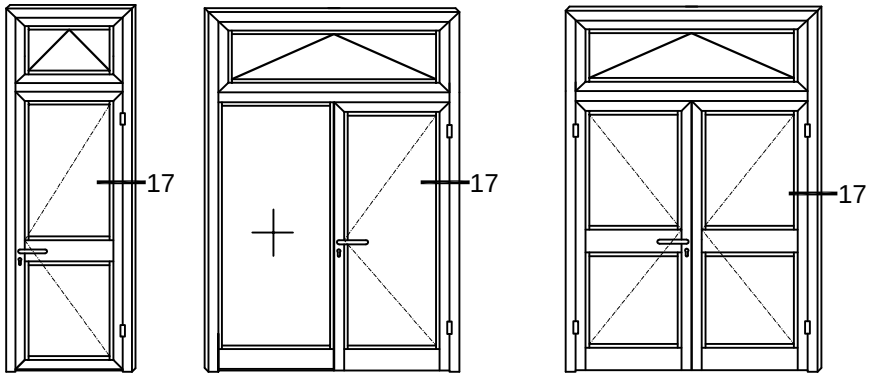

NAPOMENA: KRILO FT-0561F ZA BRAVU 35-icu
REMARK: SASH FT-0561F FOR LOCK - BACKSET 35

PRESJEK-17
CROSS SECTION-17

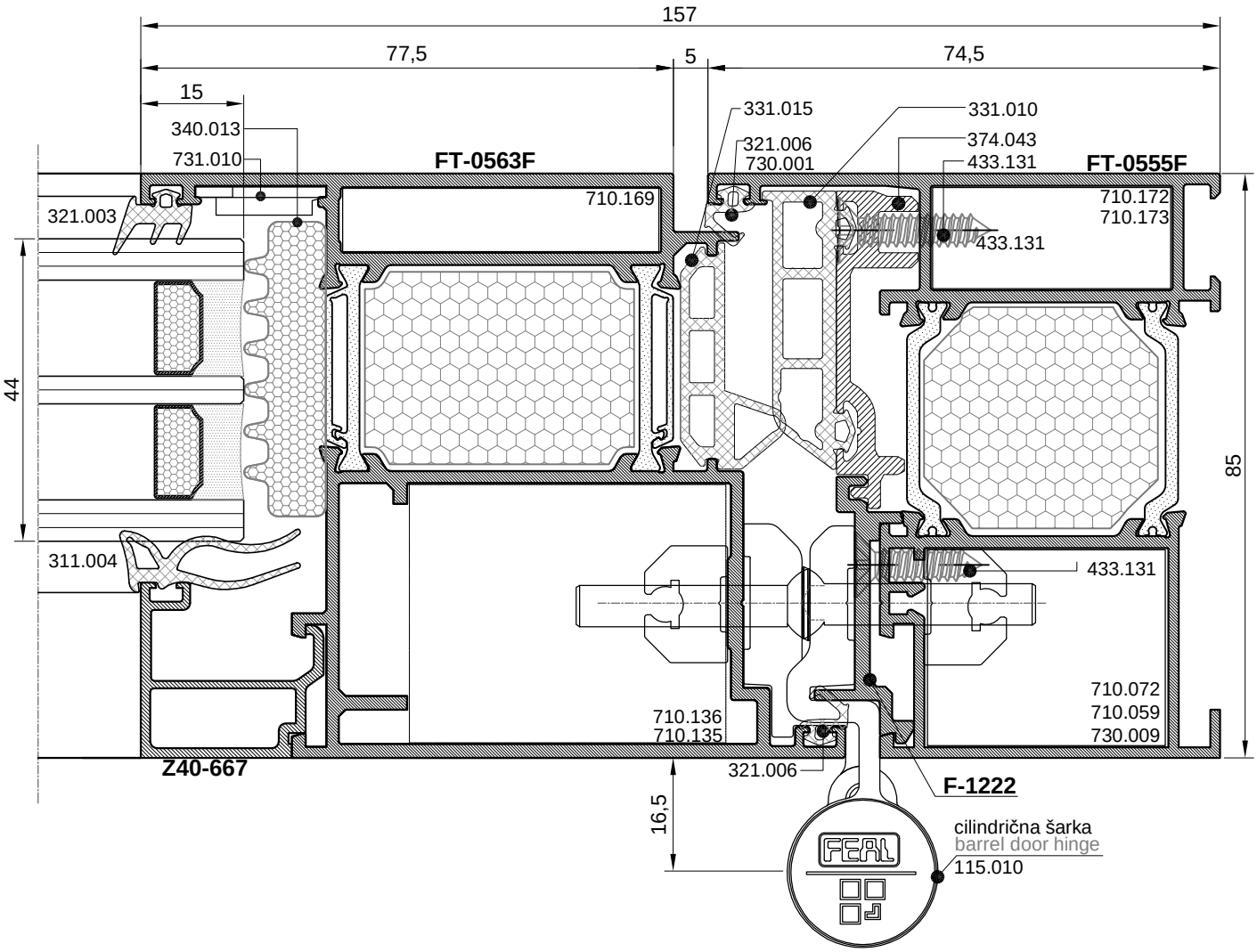

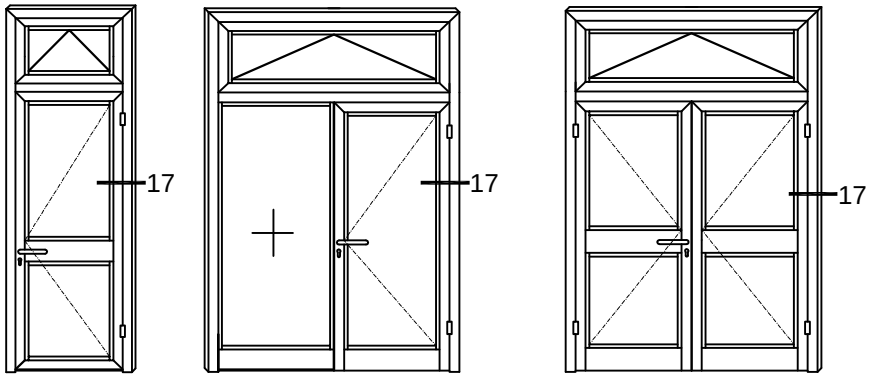

NAPOMENA: KRILO FT-0563 F ZA BRAVU 45-icu
REMARK: SASH FT-0563 F FOR LOCK -BACKSET 45

PRESJEK-16
CROSS SECTION-16

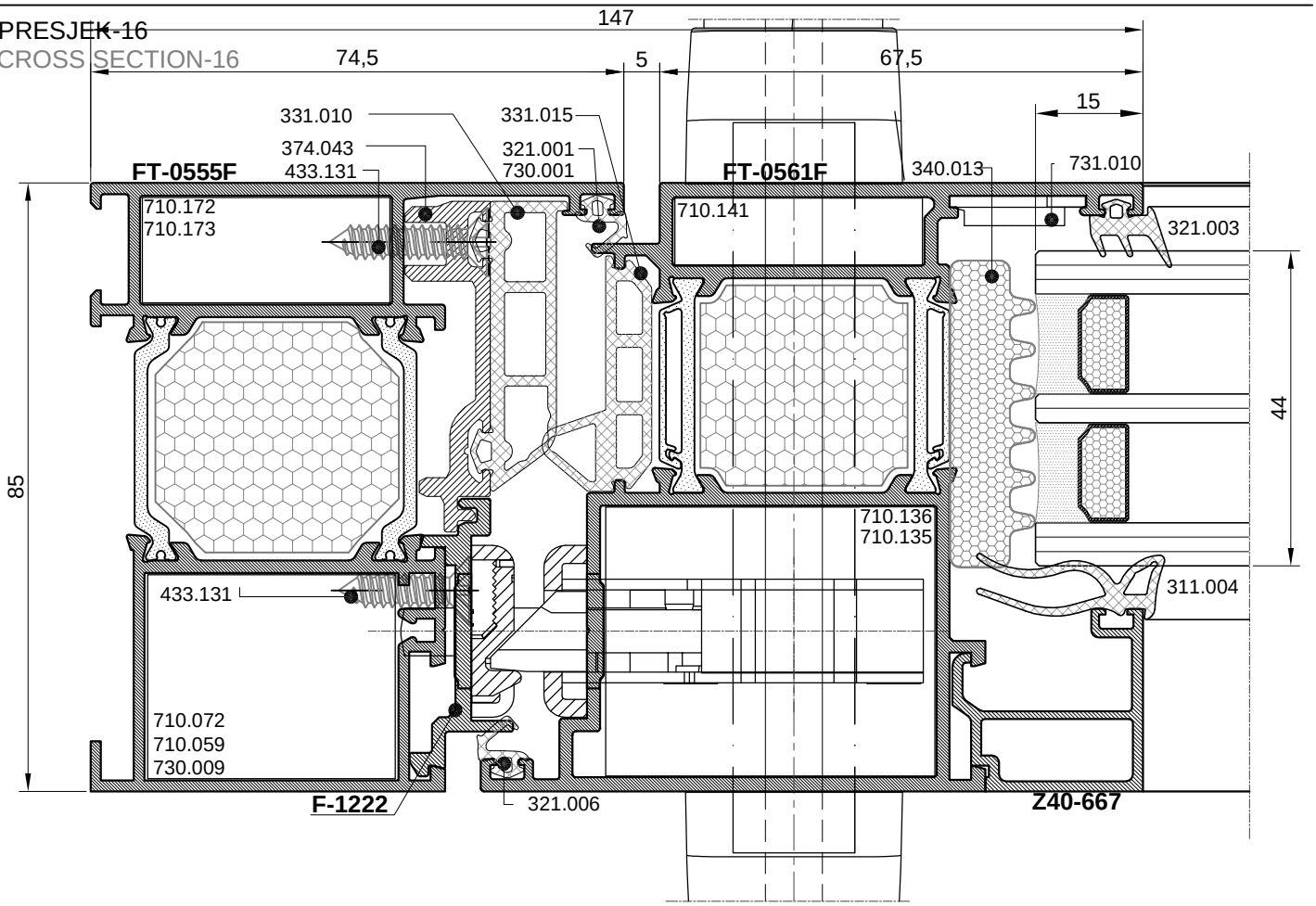

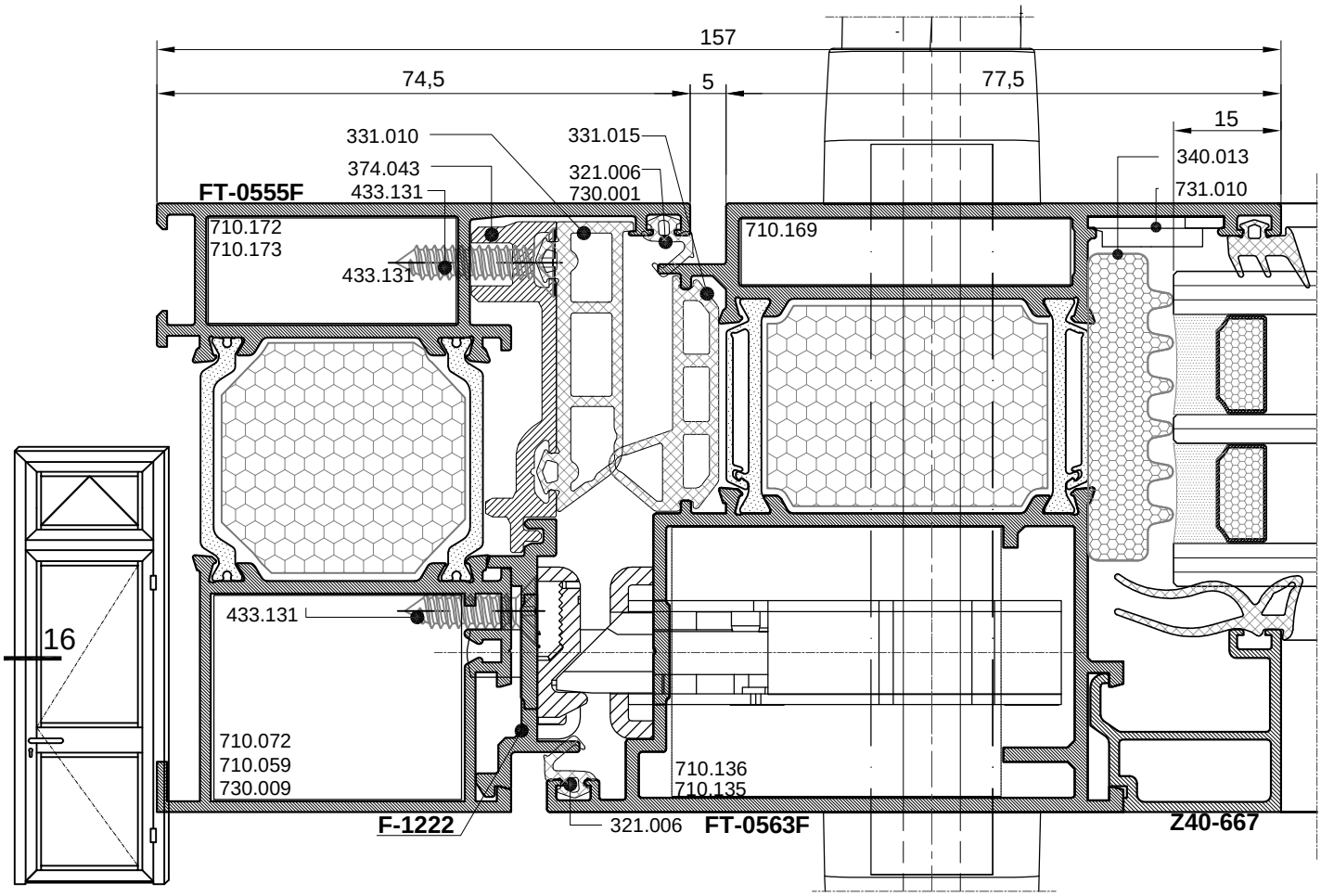

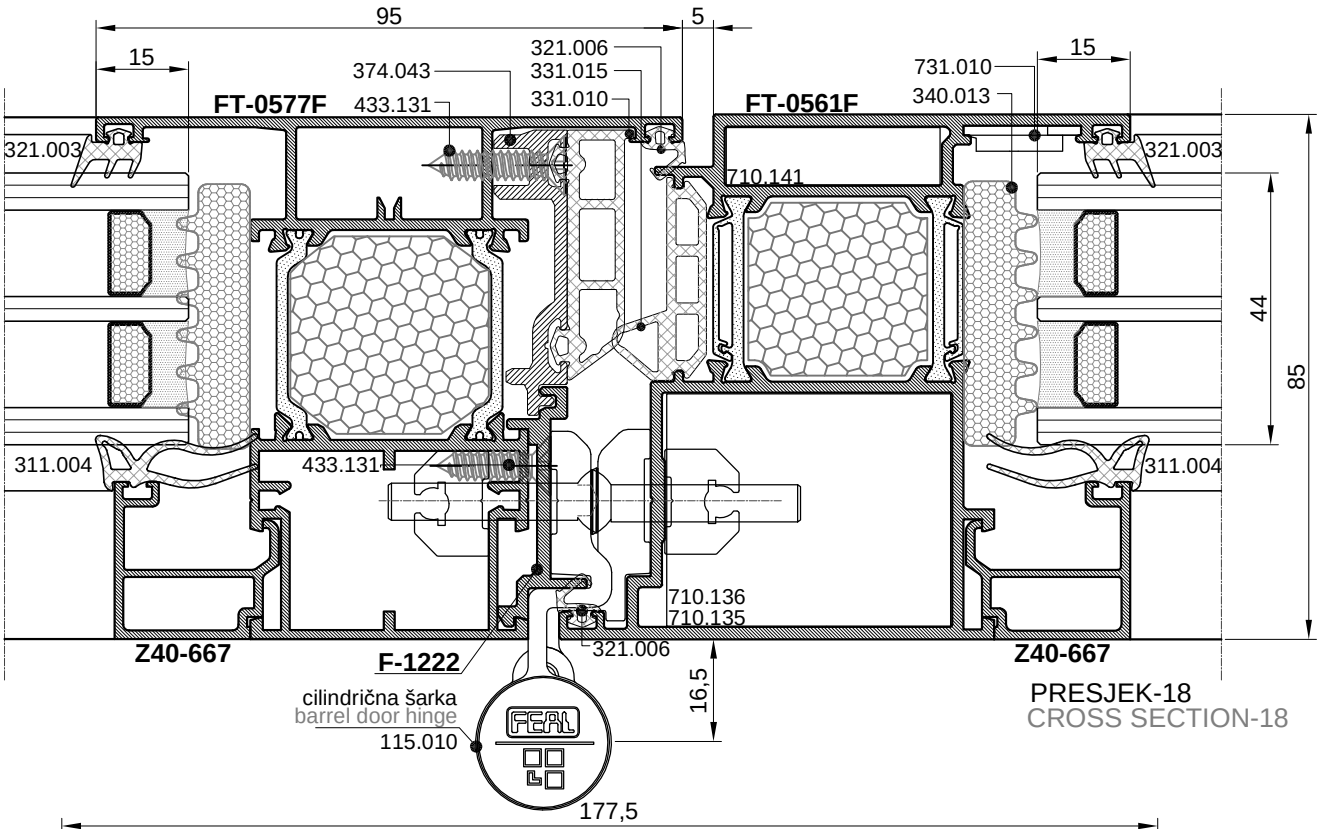

PRESJEK-18
CROSS SECTION-18

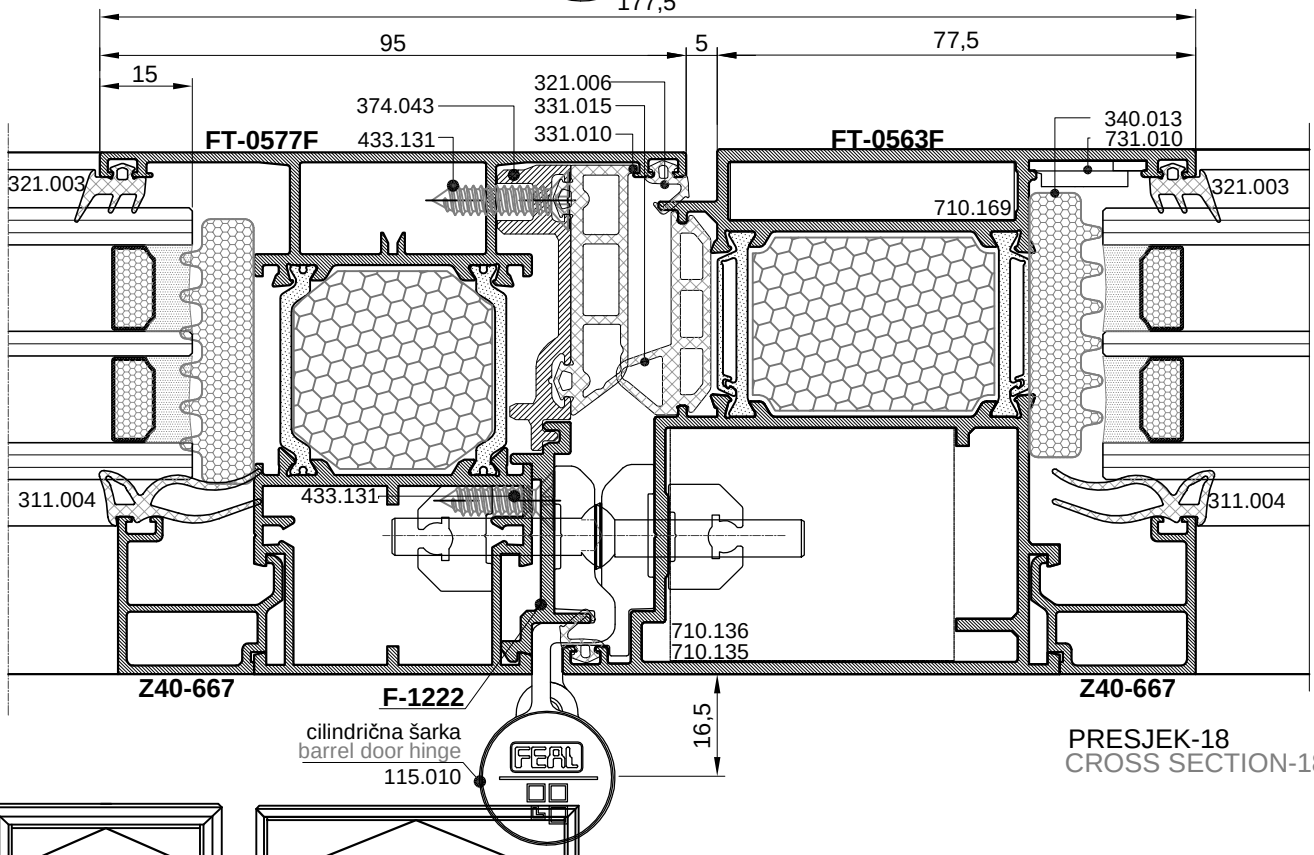

PRESJEK-18
CROSS SECTION-18

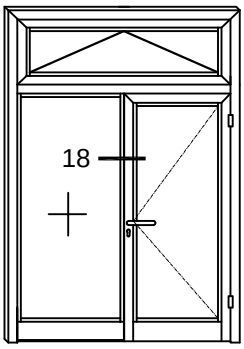

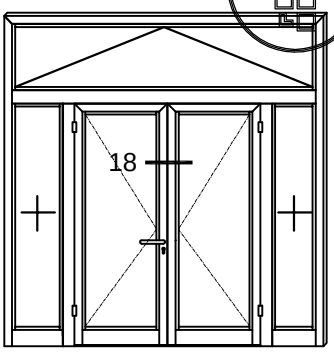

PRESJEK-19
CROSS SECTION-19

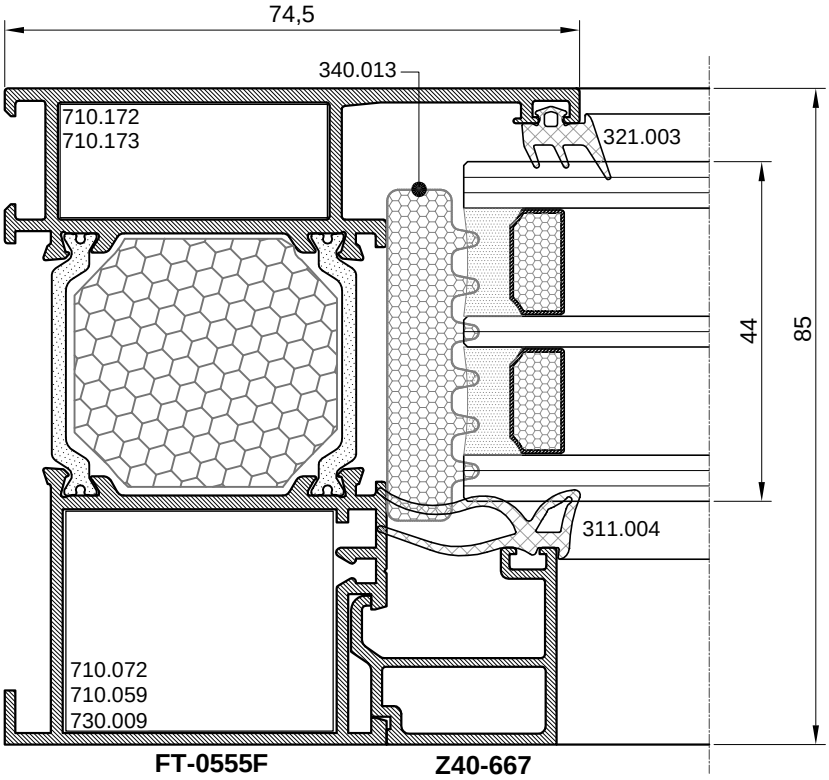

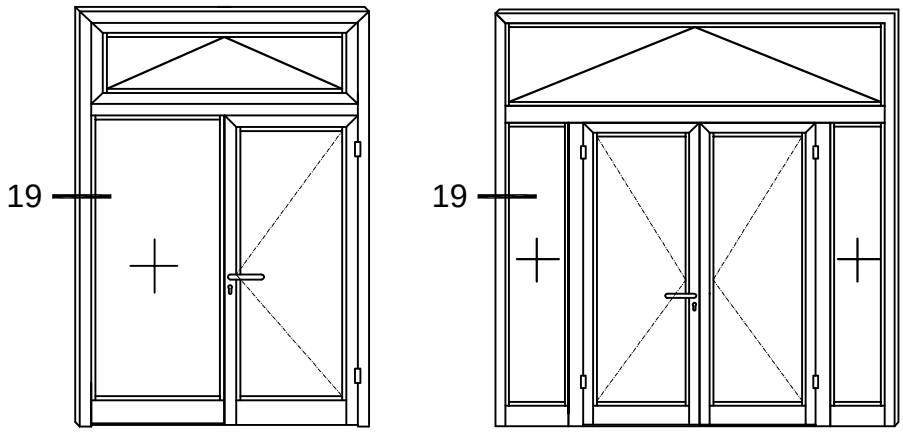

PRESJEK-15
CROSS SECTION-15

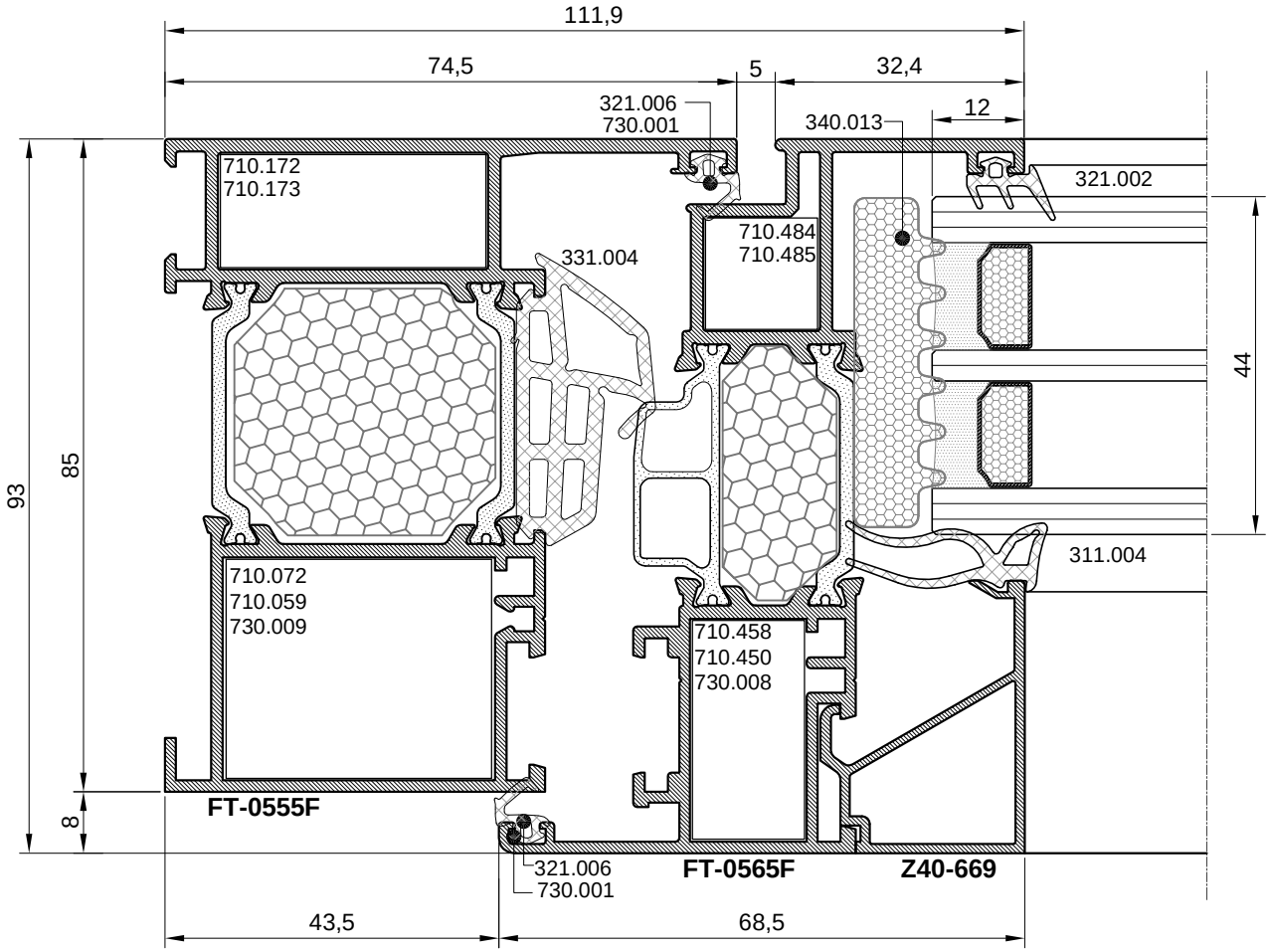

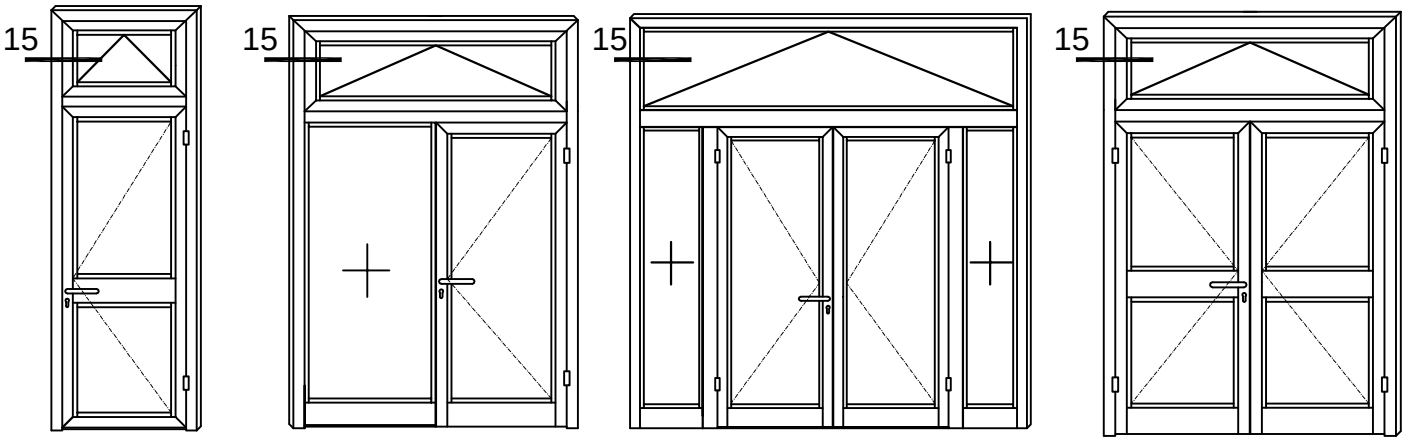

PRESJEK-20
CROSS SECTION-20

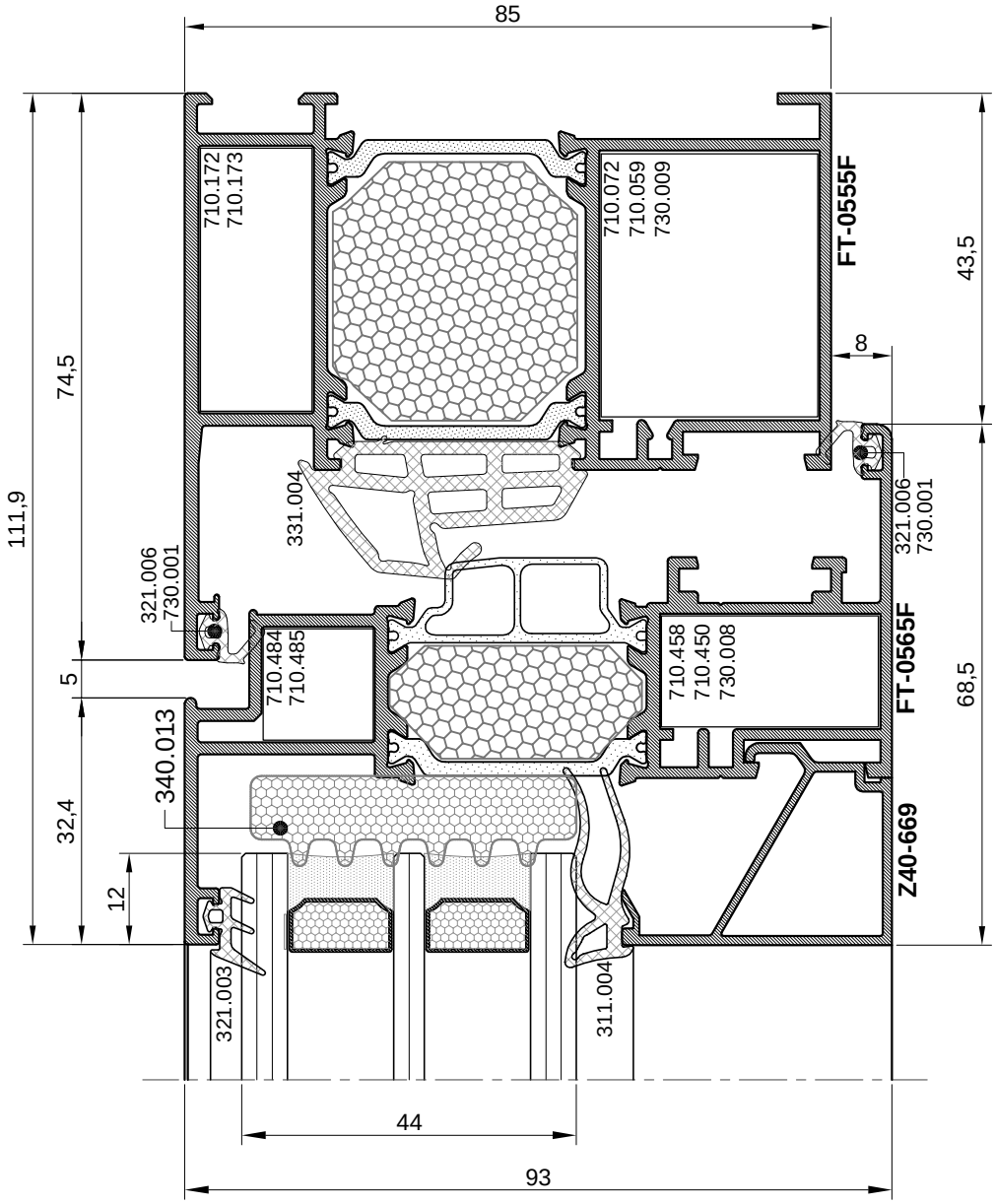

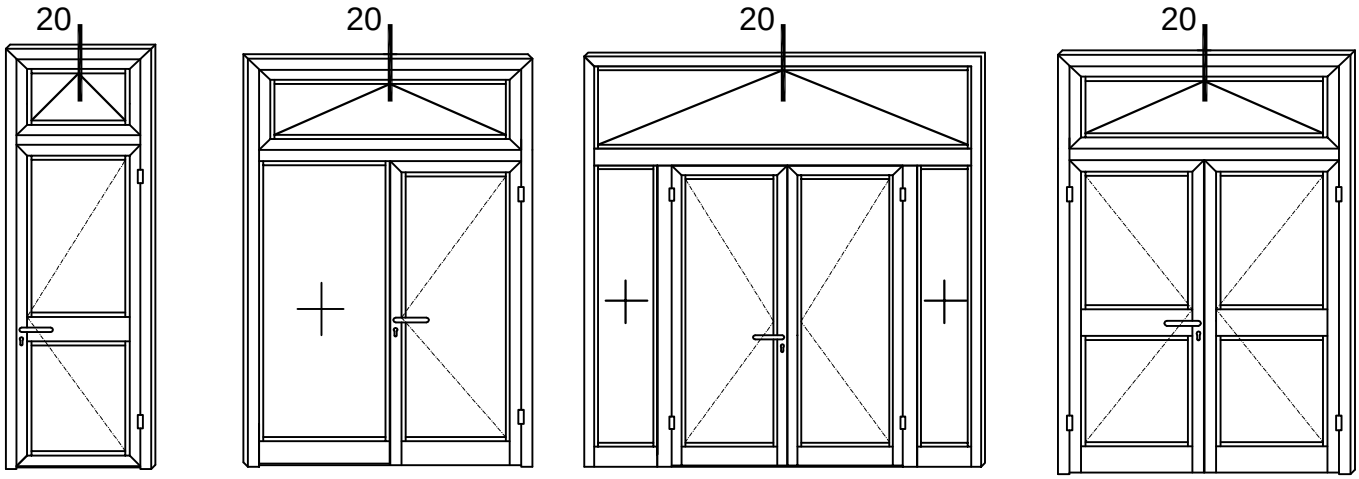

PRESJEK-21
CROSS SECTION-21

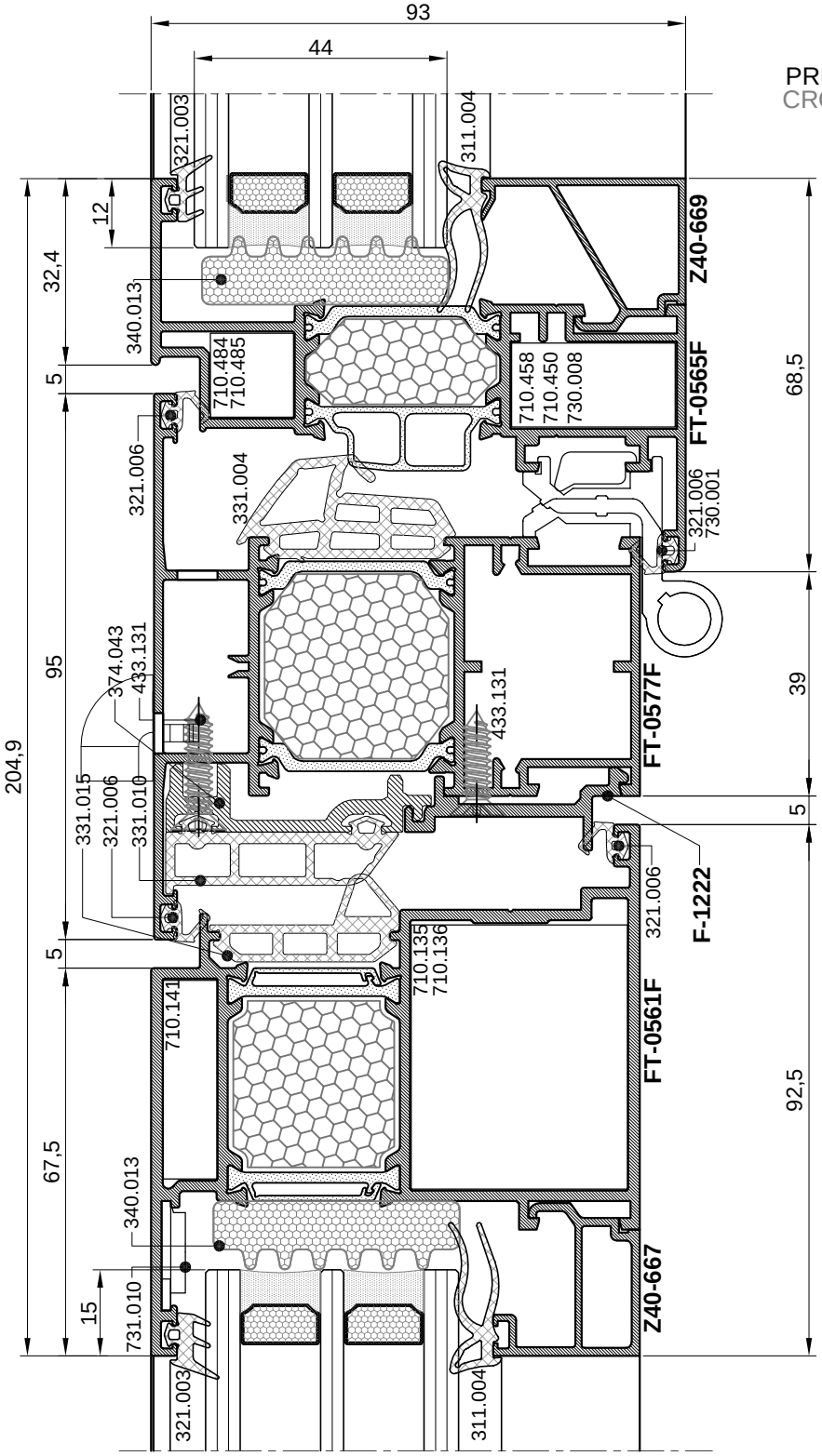

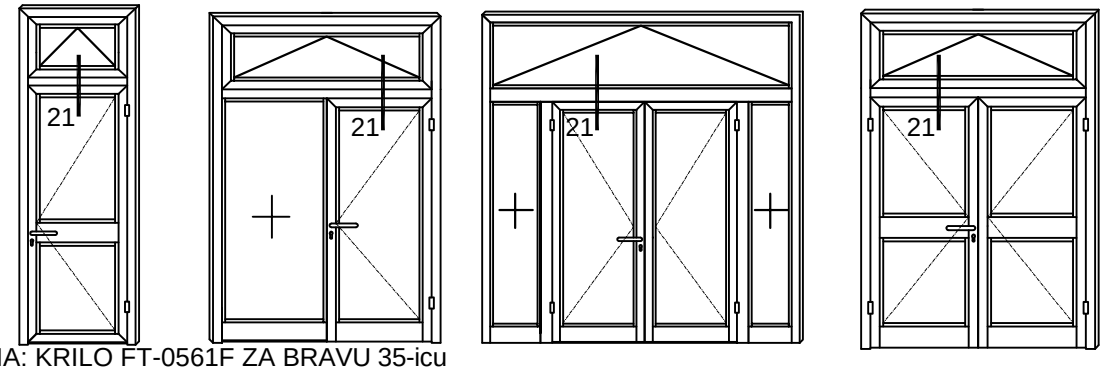

NAPOMENA: KRILO FT-0561F ZA BRAVU 35-icu
REMARK: SASH FT-0561F FOR LOCK - BACKSET 35

PRESJEK-21
CROSS SECTION-21

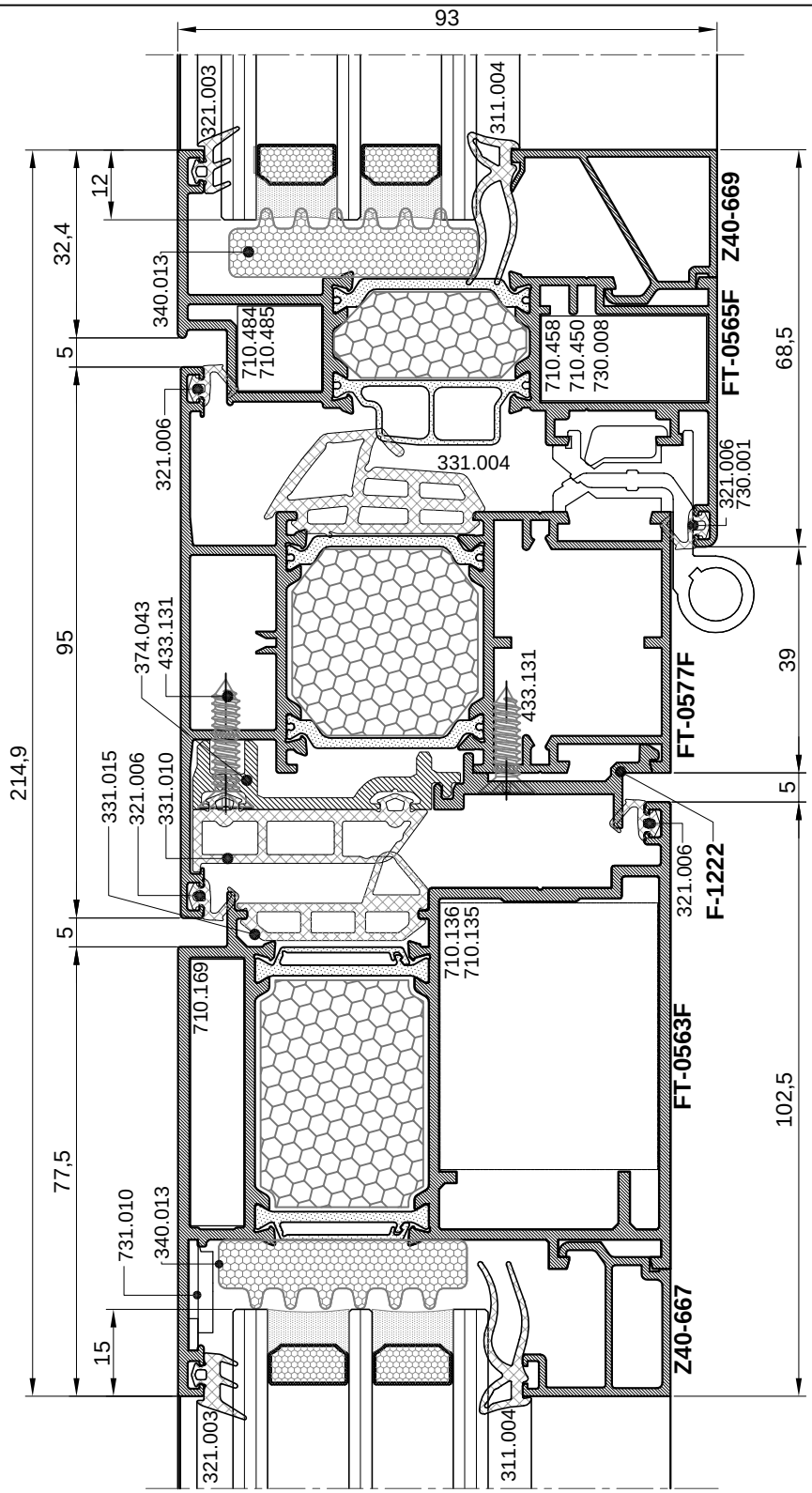

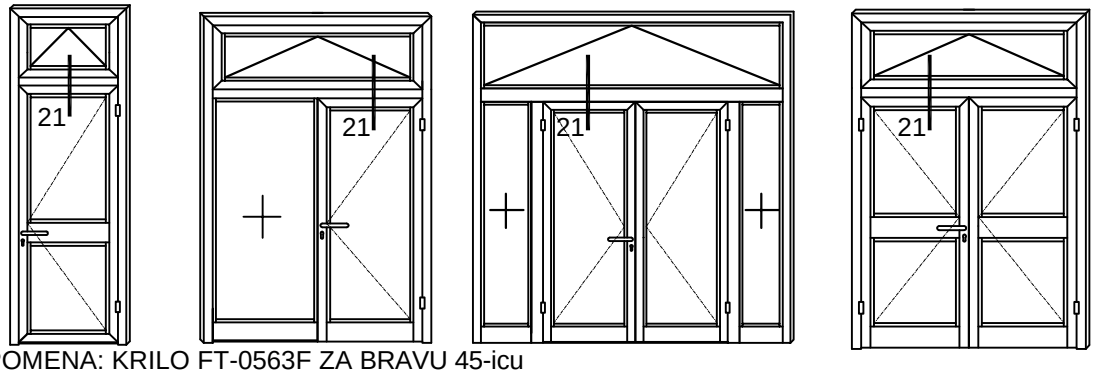

NAPOMENA: KRILO FT-0563F ZA BRAVU 45-icu
REMARK: SASH FT-0563F FOR LOCK - BACKSET 45

PRESJEK-22
CROSS SECTION-22

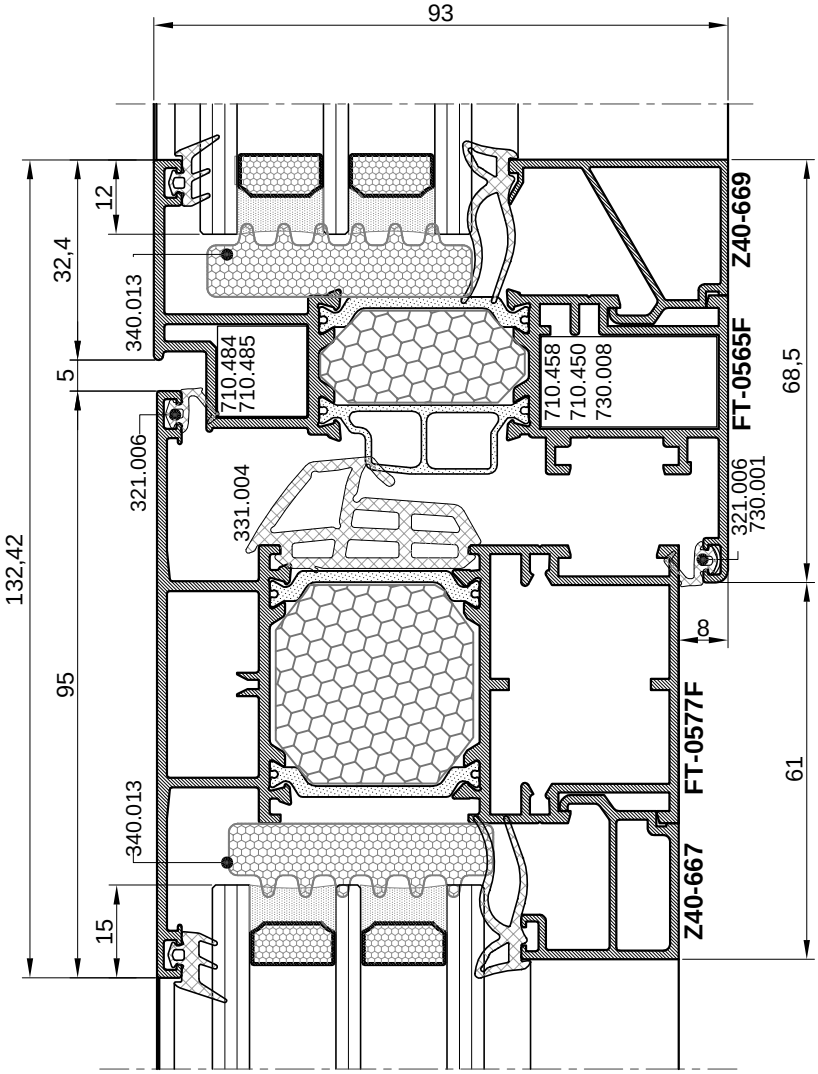

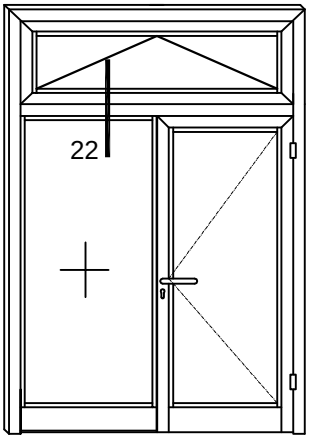

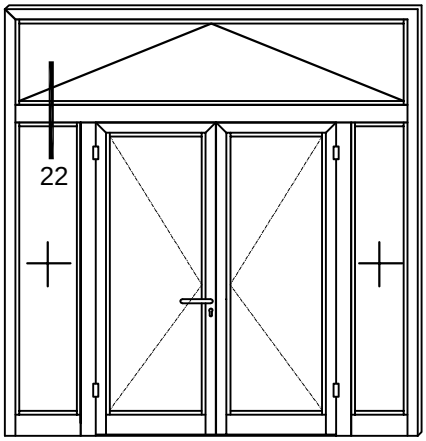

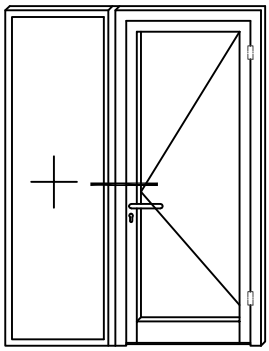

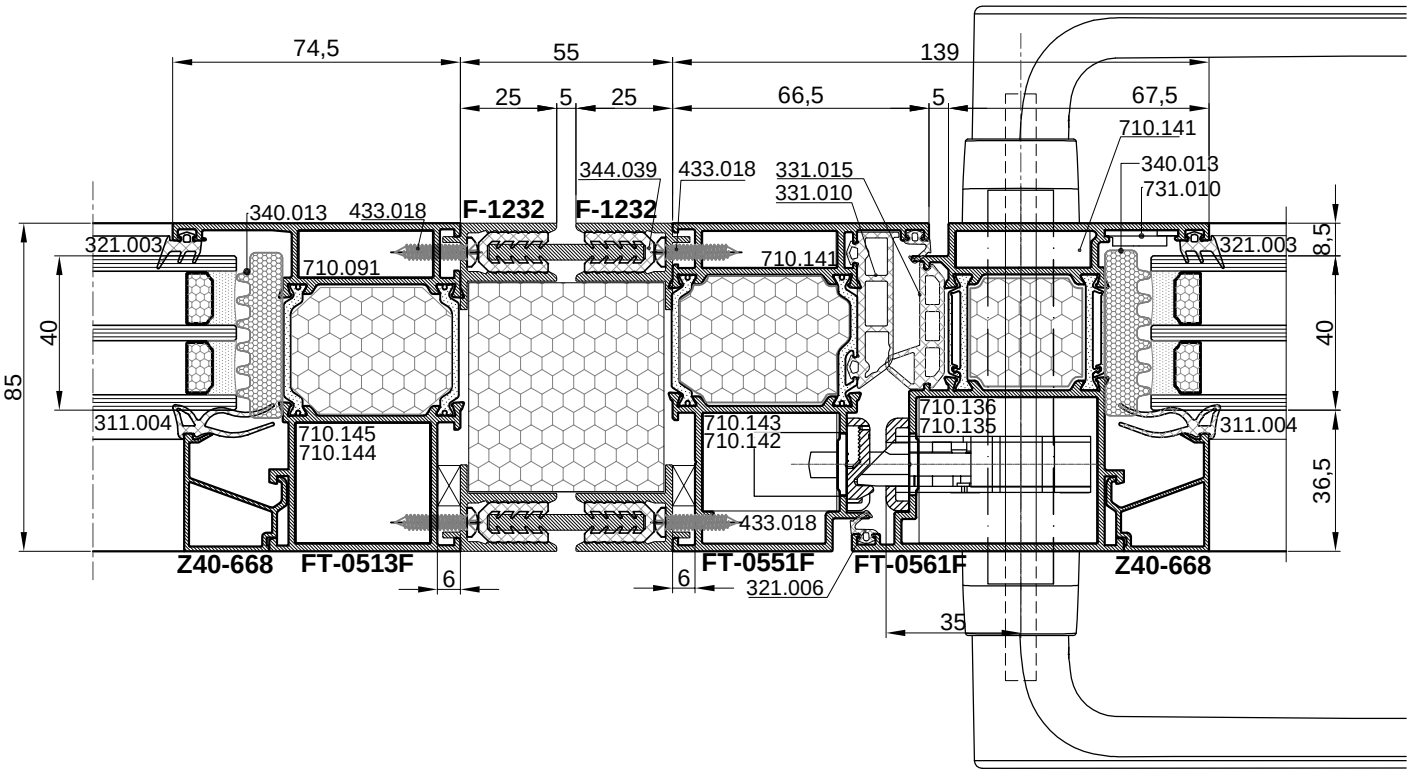
74,5
55
139
25
5
25
66,5
5
67,5
710.141
340.013
731.010
344.039
433.018
331.015
331.010
340.013
433.018
F-1232
F-1232
321.003
321.003
710.091
710.141
8,5
40
40
85
311.004
311.004
710.145
710.144
710.143
710.142
710.136
710.135
36,5
433.018
Z40-668
FT-0513F
6
6
FT-0551F
321.006
FT-0561F
Z40-668
35

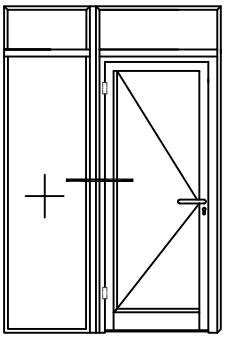

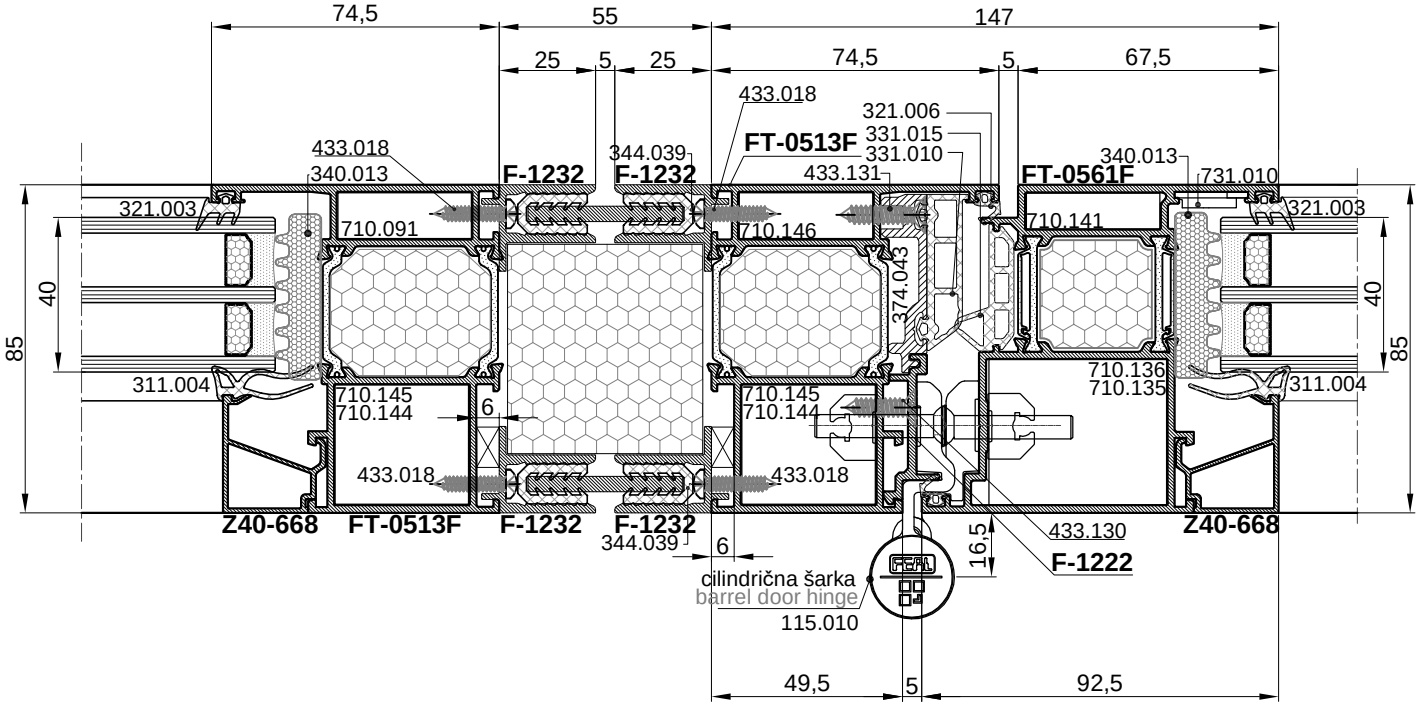
74,5
55
147
25
5
25
74,5
5
67,5
433.018
321.006
331.015
331.010
FT-0513F
433.018
340.013
344.039
F-1232
F-1232
433.131
FT-0561F
340.013
731.010
321.003
710.091
710.146
710.141
321.003
374.043
40
85
40
85
311.004
710.145
710.144
6
710.145
710.144
710.136
710.135
311.004
433.018
433.018
Z40-668
FT-0513F
F-1232
F-1232
344.039
6
433.130
Z40-668
16,5
F-1222
cilindrična šarka
barrel door hinge
115.010
49,5
5
92,5

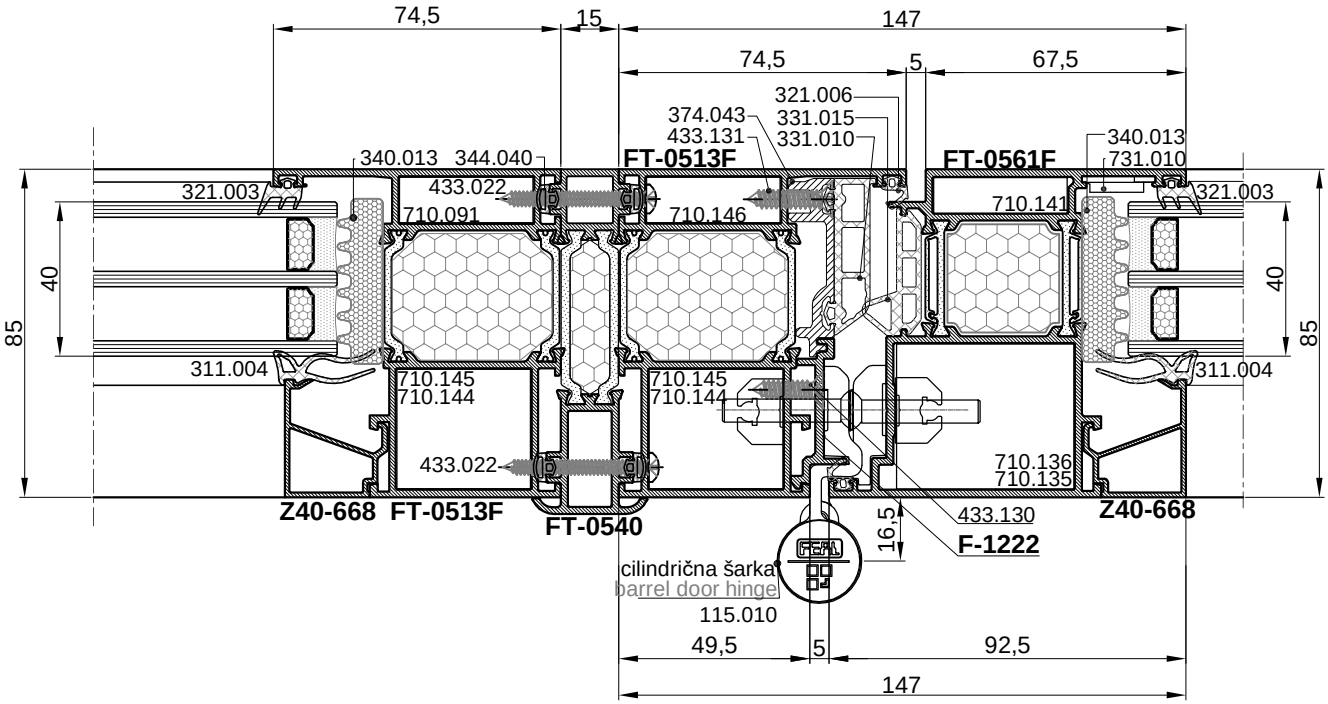
74,5
15
147
74,5
5
67,5
321.006
374.043
331.015
433.131
331.010
340.013
340.013
344.040
FT-0513F
FT-0561F
731.010
321.003
433.022
710.091
710.146
710.141
321.003
40
85
40
85
311.004
710.145
710.144
710.145
710.144
311.004
433.022
710.136
710.135
Z40-668
FT-0513F
FT-0540
433.130
Z40-668
16,5
F-1222
cilindrična šarka
barrel door hinge
115.010
49,5
5
92,5
147

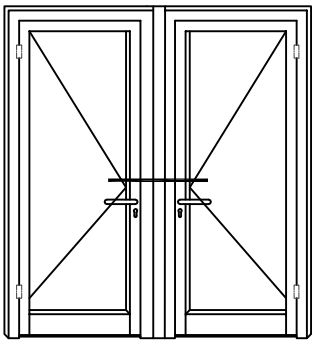

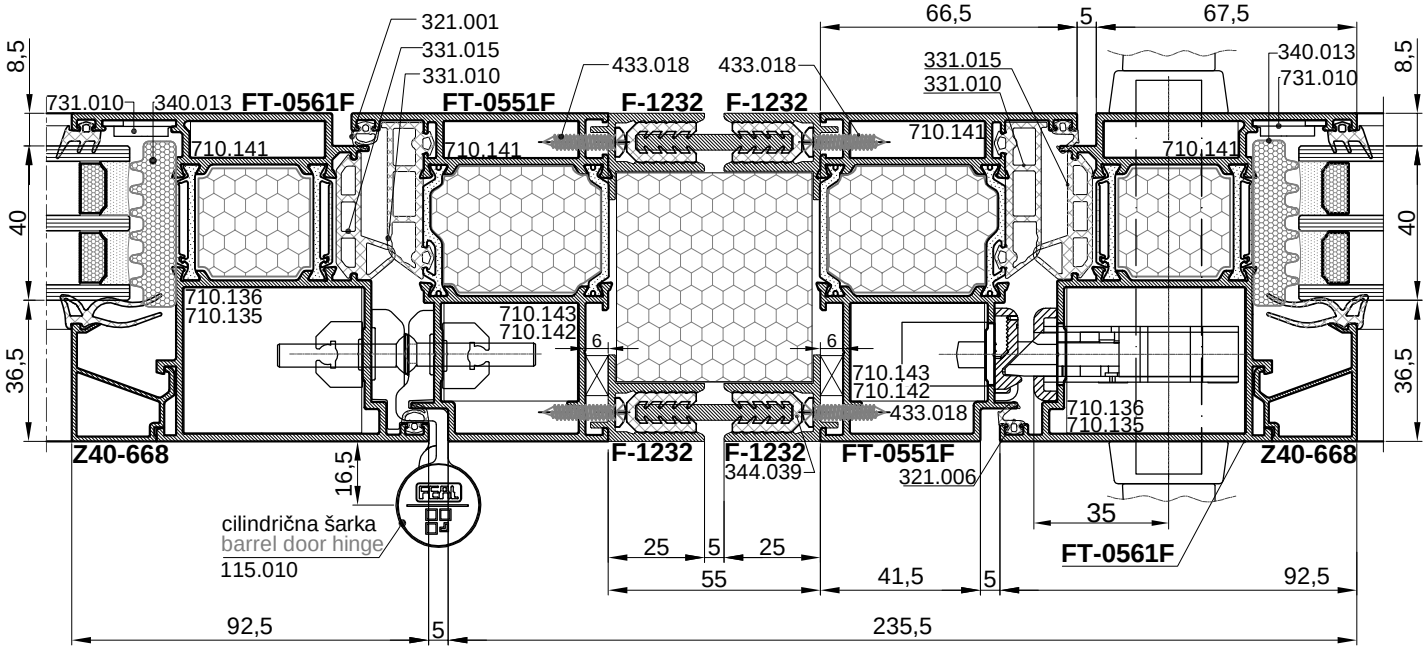
321.001
331.015
331.010
433.018
433.018
66,5
5
67,5
331.015
331.010
340.013
731.010
8,5
731.010
340.013
FT-0561F
FT-0551F
F-1232
F-1232
710.141
710.141
710.141
710.141
40
40
710.136
710.135
710.143
710.142
6
6
710.143
710.142
433.018
710.136
710.135
36,5
36,5
Z40-668
F-1232
F-1232
344.039
FT-0551F
321.006
Z40-668
16,5
cilindrična šarka
barrel door hinge
115.010
35
FT-0561F
25
5
25
55
41,5
5
92,5
92,5
5
235,5

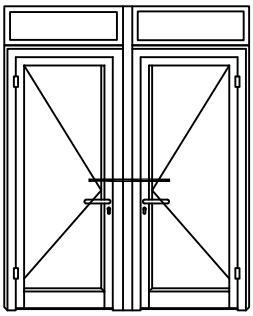

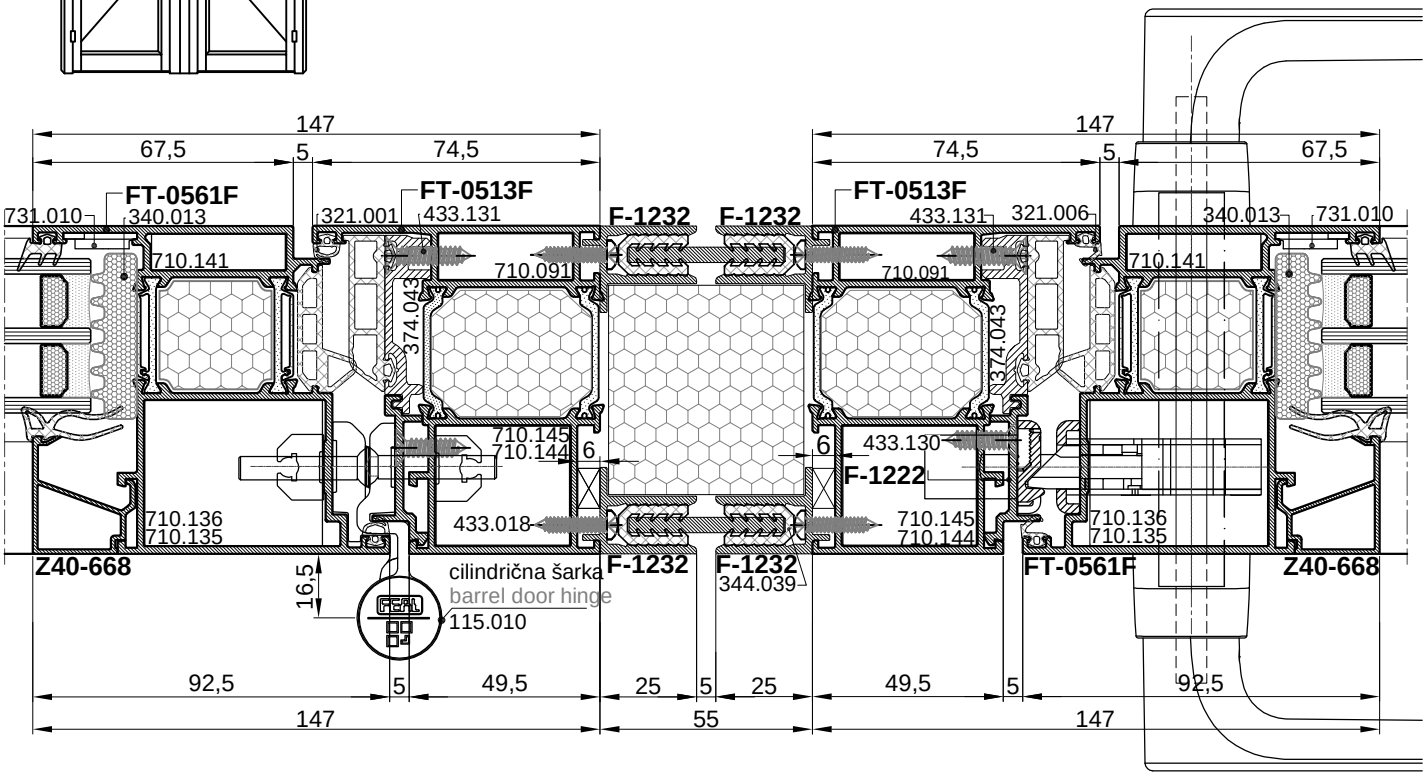
147
67,5
5
74,5
FT-0561F
731.010
340.013
FT-0513F
321.001
433.131
F-1232
F-1232
FT-0513F
433.131
321.006
340.013
731.010
710.141
710.091
710.091
710.141
374.043
374.043
710.145
710.144
6
6
433.130
F-1222
710.136
710.135
433.018
710.145
710.144
710.136
710.135
Z40-668
16,5
cilindrična šarka
barrel door hinge
115.010
F-1232
F-1232
344.039
FT-0561F
Z40-668
92,5
5
49,5
25
5
25
49,5
5
92,5
147
55
147

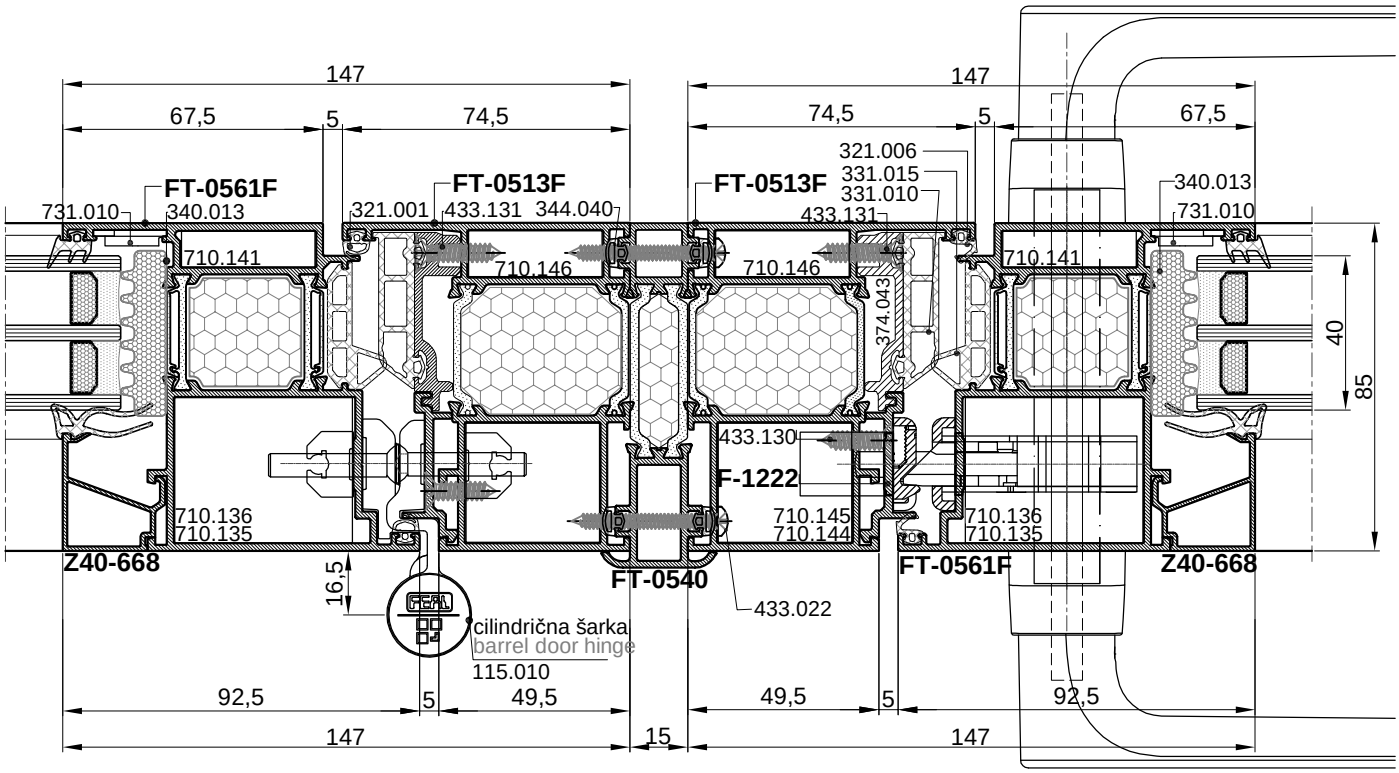
147
67,5
5
74,5
FT-0561F
731.010
340.013
FT-0513F
321.001
433.131
344.040
FT-0513F
321.006
331.015
331.010
433.131
340.013
731.010
710.141
710.146
710.146
710.141
374.043
40
85
433.130
F-1222
710.136
710.135
710.145
710.144
710.136
710.135
Z40-668
16,5
FT-0540
433.022
FT-0561F
Z40-668
cilindrična šarka
barrel door hinge
115.010
92,5
5
49,5
49,5
5
92,5
147
15
147

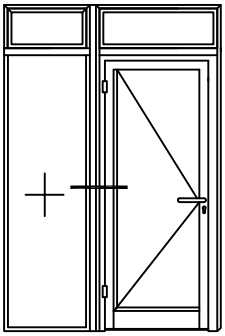

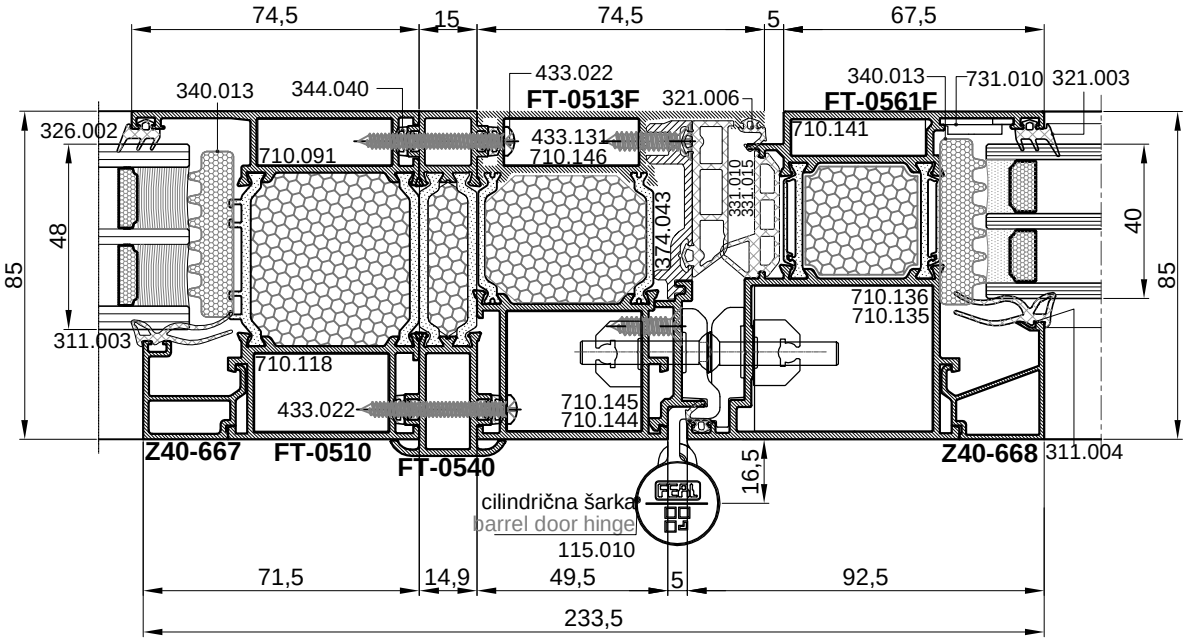
74,5
15
74,5
5
67,5
340.013
344.040
433.022
FT-0513F
321.006
340.013
FT-0561F
731.010
321.003
326.002
710.091
433.131
710.146
710.141
331.010
331.015
374.043
48
85
40
85
710.136
710.135
311.003
710.118
433.022
710.145
710.144
Z40-667
FT-0510
FT-0540
Z40-668
311.004
16,5
cilindrična šarka
barrel door hinge
115.010
71,5
14,9
49,5
5
92,5
233,5

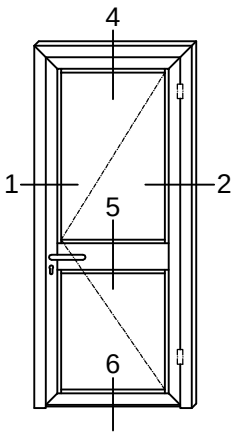
4
1
2
5
6

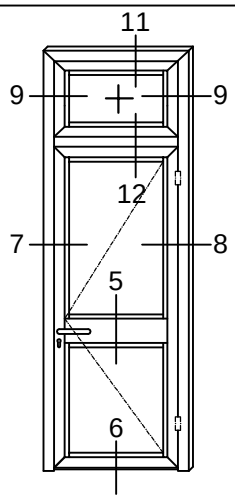
11
9
9
12
7
8
5
6

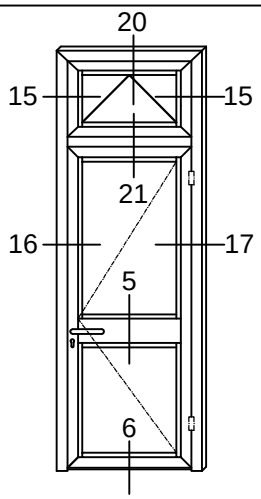
20
15
15
21
16
17
5
6

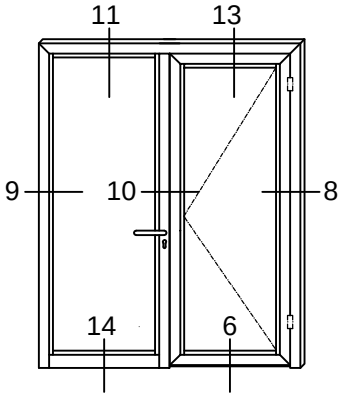
11
13
9
10
8
14
6

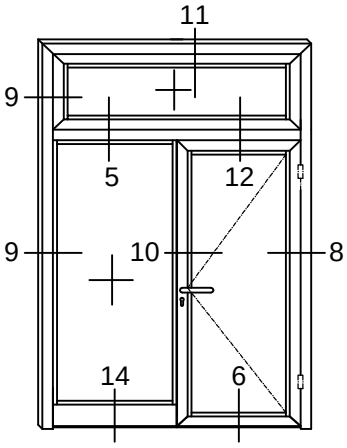
11
9
5
12
9
10
8
14
6

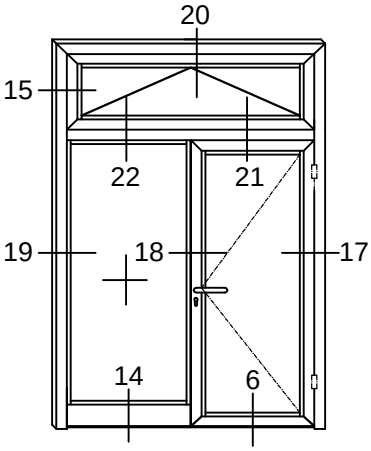
20
15
22
21
19
18
17
14
6

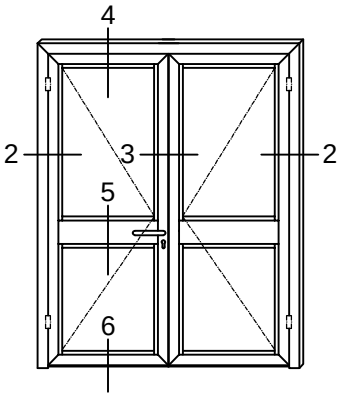
4
2
3
2
5
6

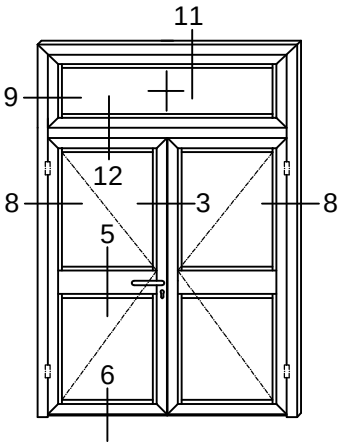
11
9
12
8
3
8
5
6

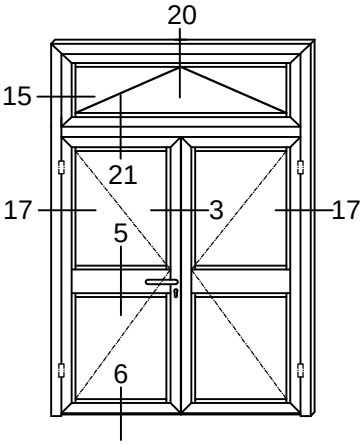
20
15
21
17
3
17
5
6

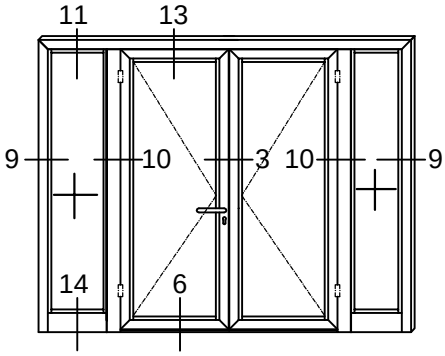
11
13
9
10
3
10
9
14
6

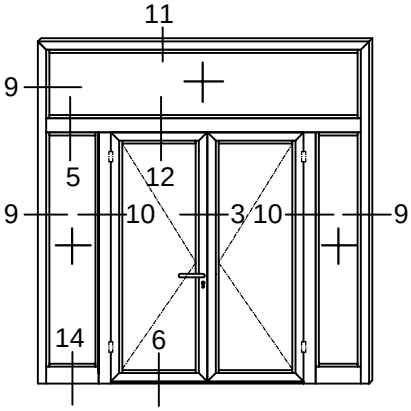
11
9
5
12
9
10
3
10
9
14
6

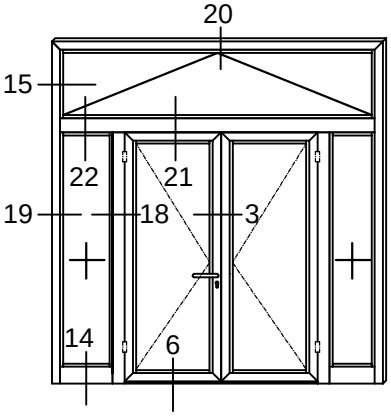
20
15
22
21
19
18
3
14
6

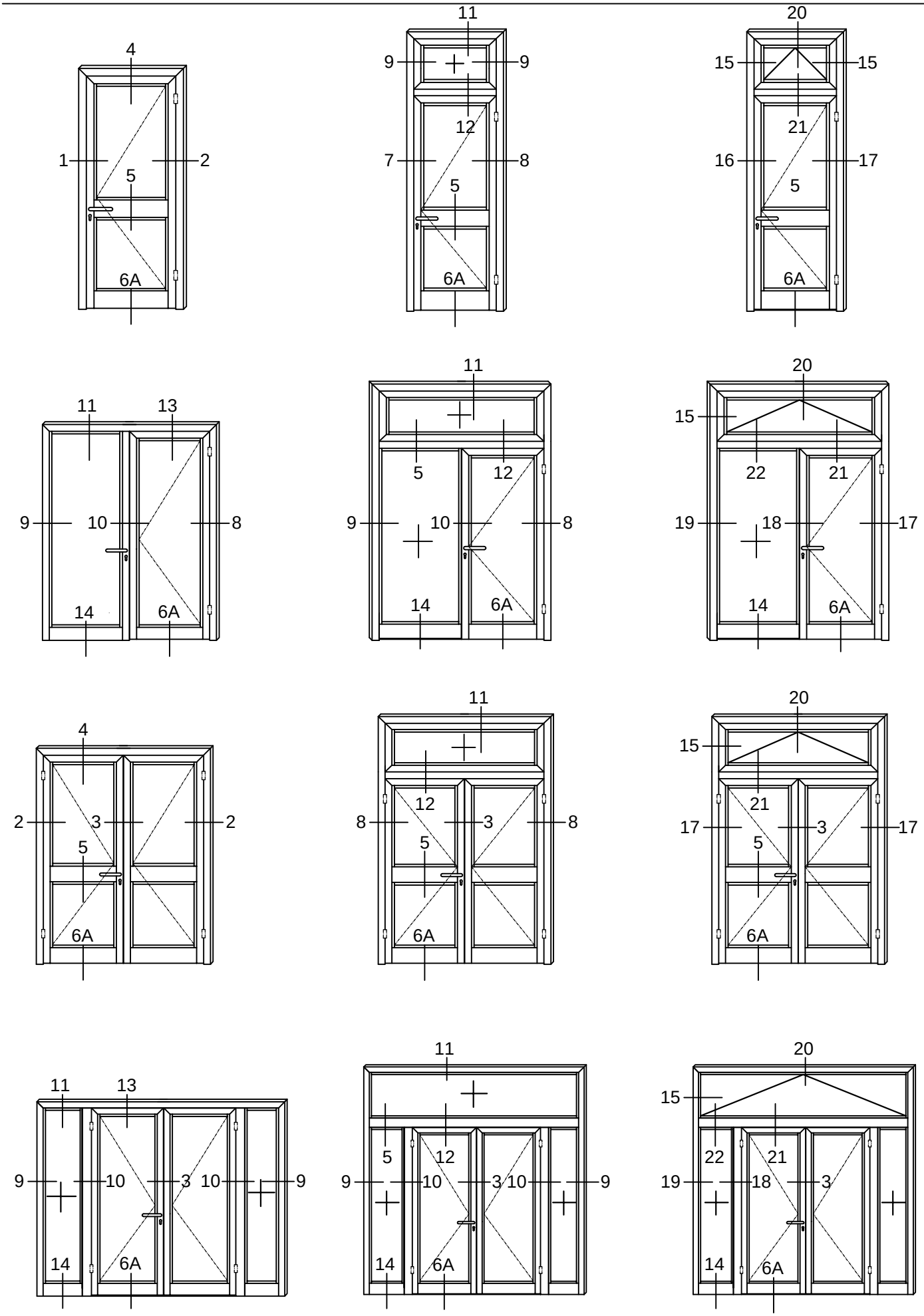
4
1
2
5
6A
11
9
9
12
7
8
5
6A
20
15
15
21
16
17
5
6A
11
13
9
10
8
14
6A
11
5
12
9
10
8
14
6A
20
15
22
21
19
18
17
14
6A
4
2
3
2
5
6A
11
12
8
3
8
5
6A
20
15
21
17
3
17
5
6A
11
13
9
10
3
10
9
14
6A
11
5
12
9
10
3
10
9
14
6A
20
15
22
21
19
18
3
14
6A

PRESJEK-1
CROSS SECTION-1

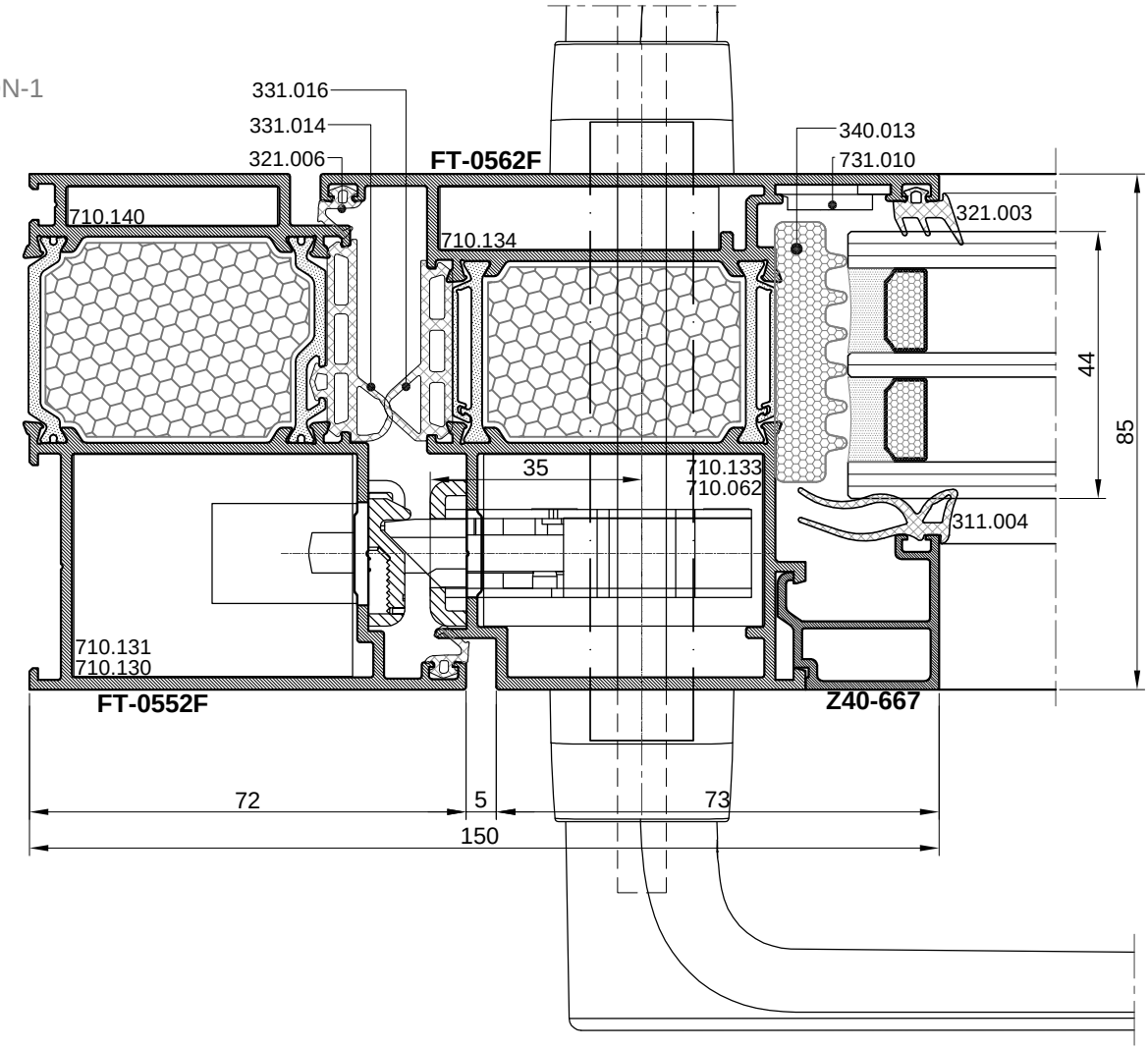

PRESJEK-2
CROSS SECTION-2

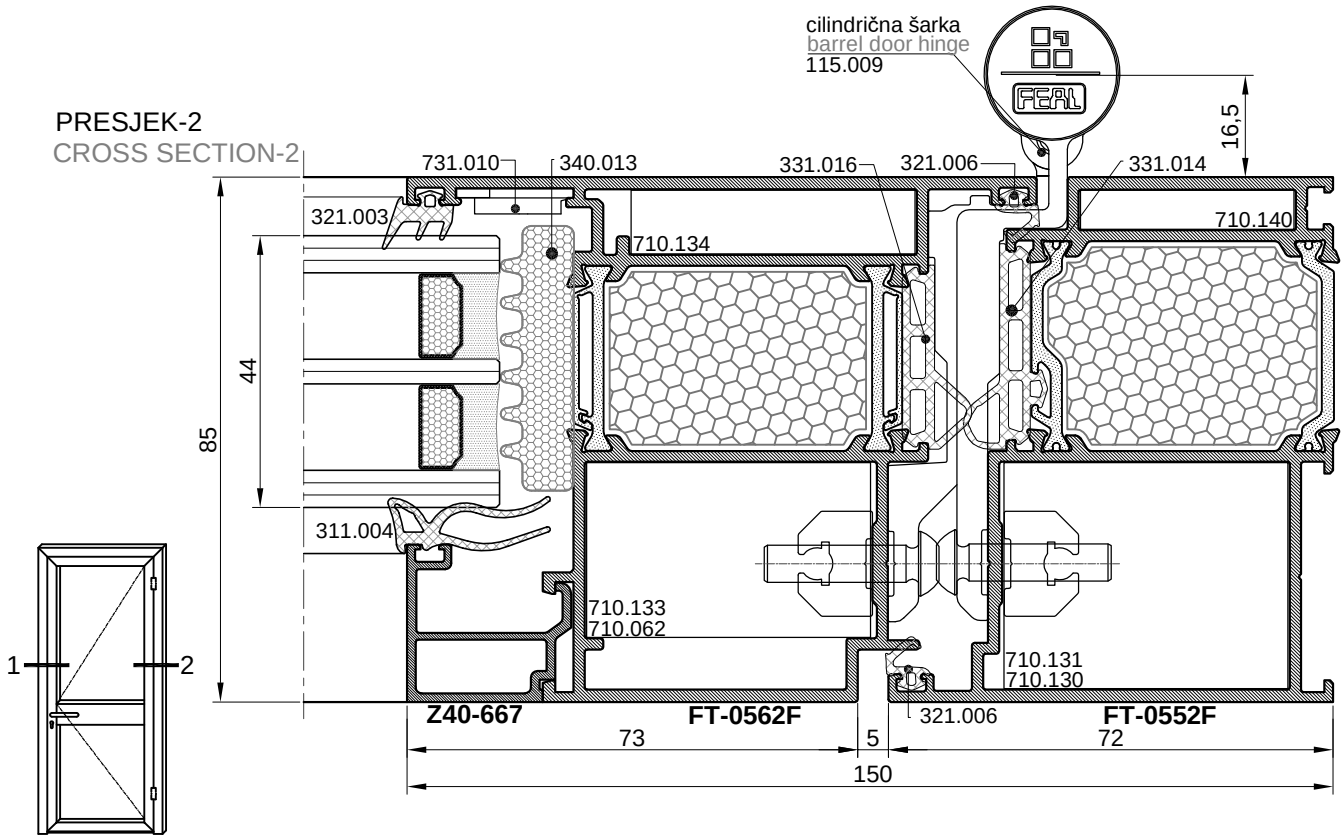

NAPOMENA: KRILO FT-0562F ZA BRAVU 35-icu
REMARK: SASH FT-0562F FOR LOCK -BACKSET 35

PRESJEK-1
CROSS SECTION-1

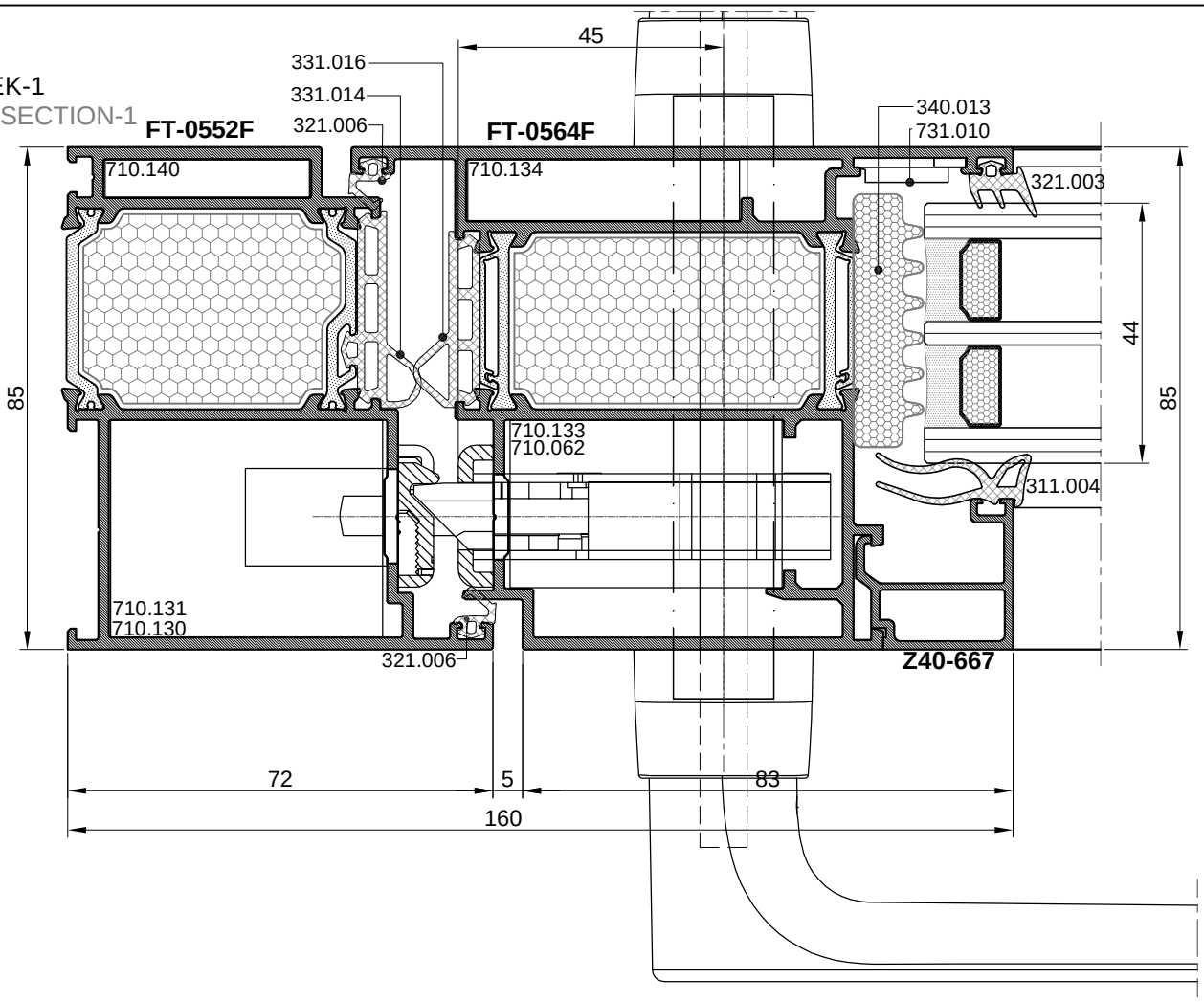

PRESJEK-2
CROSS SECTION-2

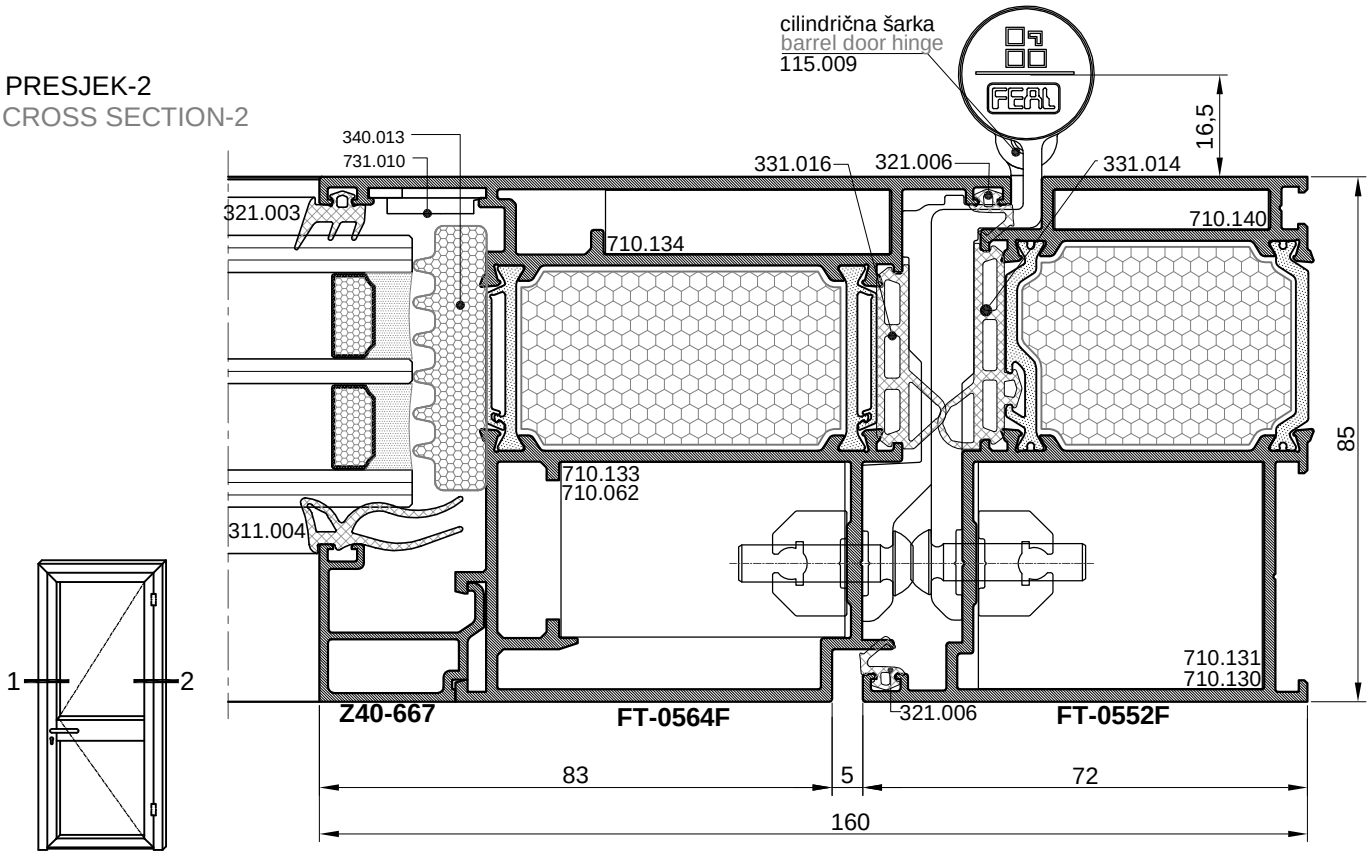

NAPOMENA: KRILO FT-0564F ZA BRAVU 45-icu
REMARK: SASH FT-0564F FOR LOCK-BACKSET 45

PRESJEK-2
CROSS SECTION-2

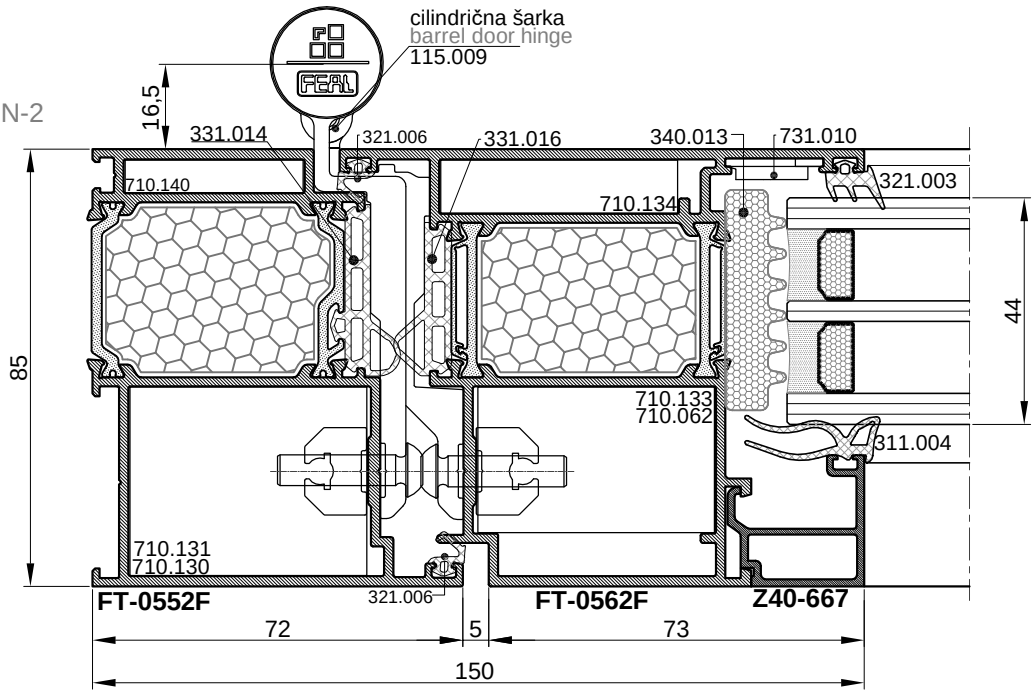

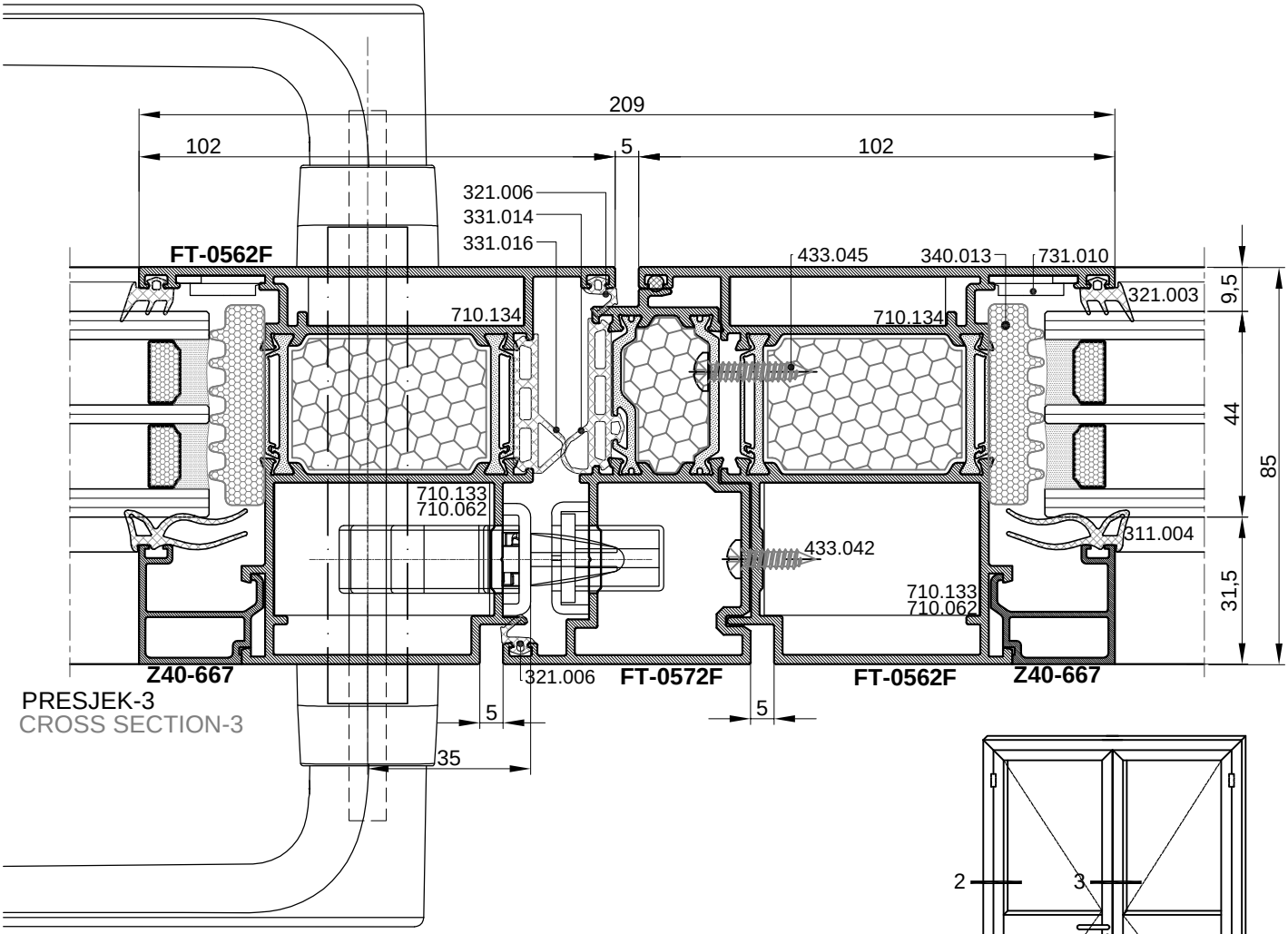

PRESJEK-3
CROSS SECTION-3

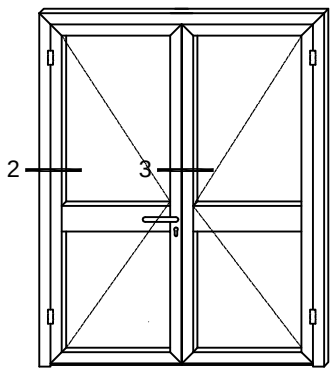

NAPOMENA: KRILO FT-0562F ZA BRAVU 35-icu
REMARK: SASHFT-0562F FOR LOCK - BACKSET 35

PRESJEK-2
CROSS SECTION-2

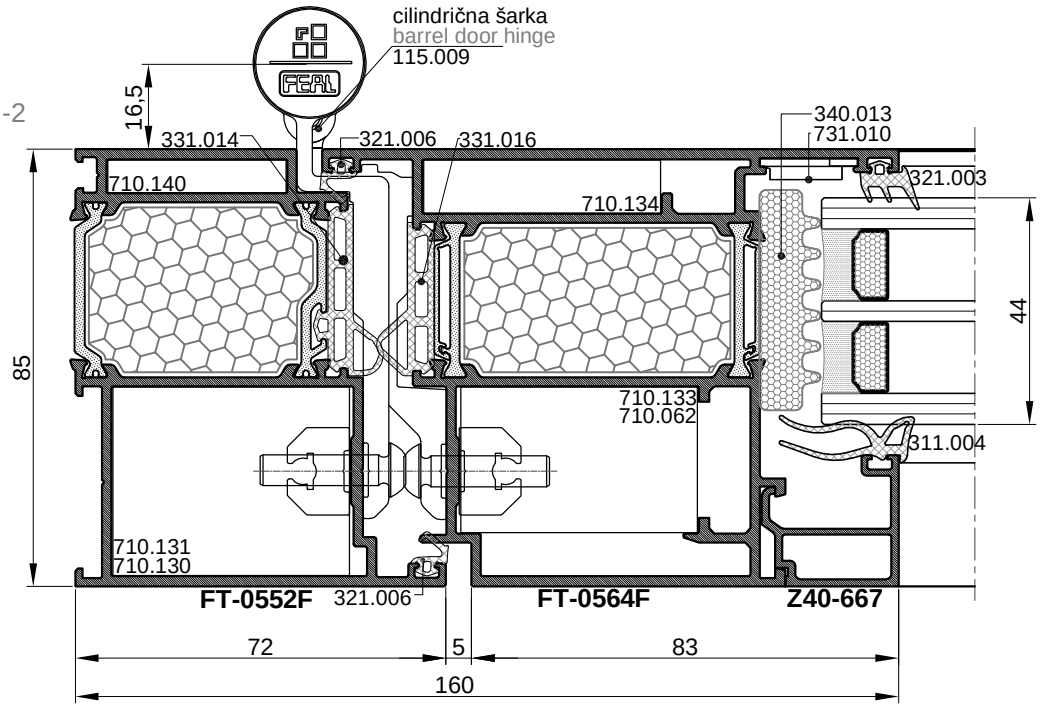

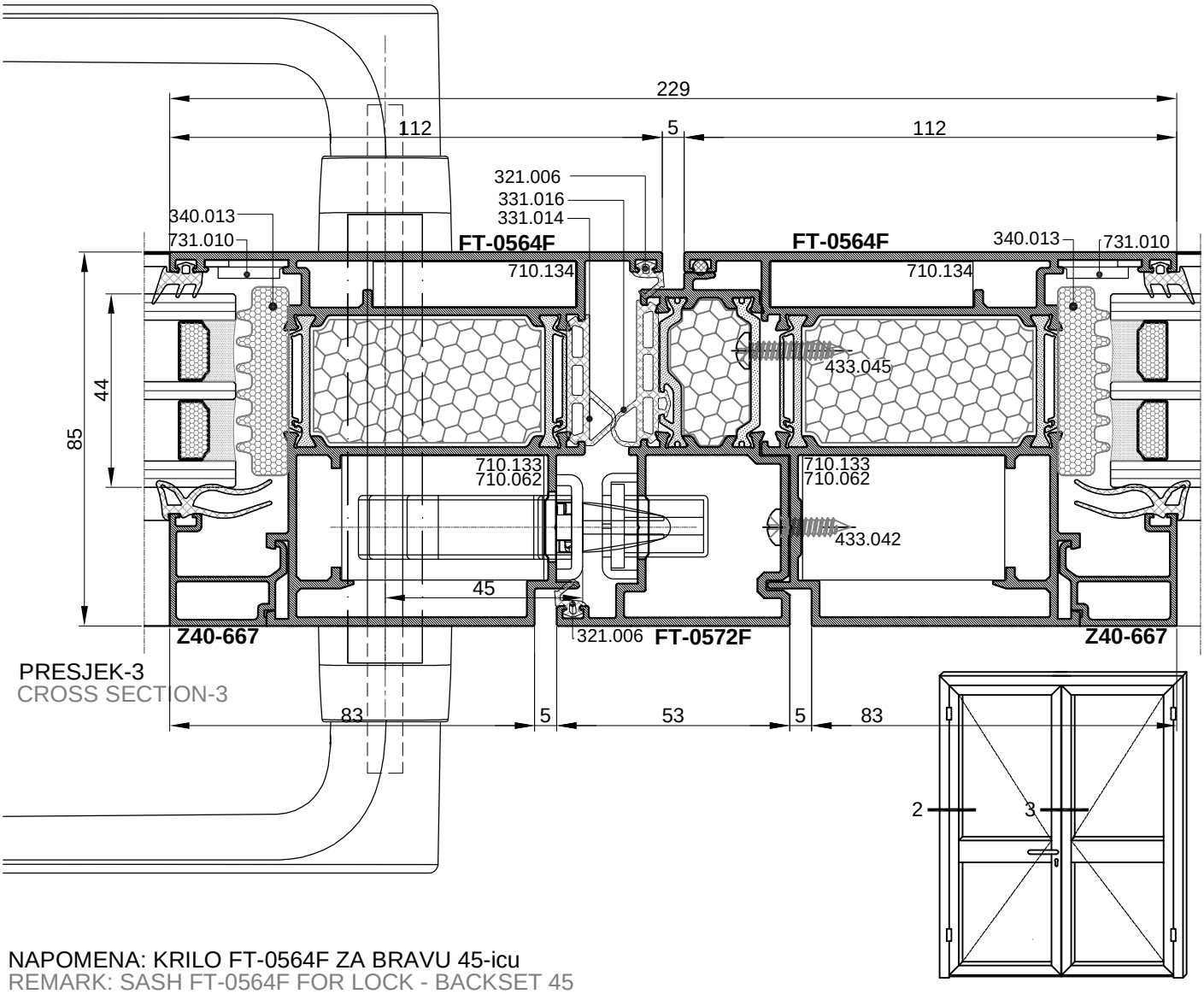

PRESJEK-3
CROSS SECTION-3

NAPOMENA: KRILO FT-0564F ZA BRAVU 45-icu
REMARK: SASH FT-0564F FOR LOCK - BACKSET 45

PRESJEK-7
CROSS SECTION-7

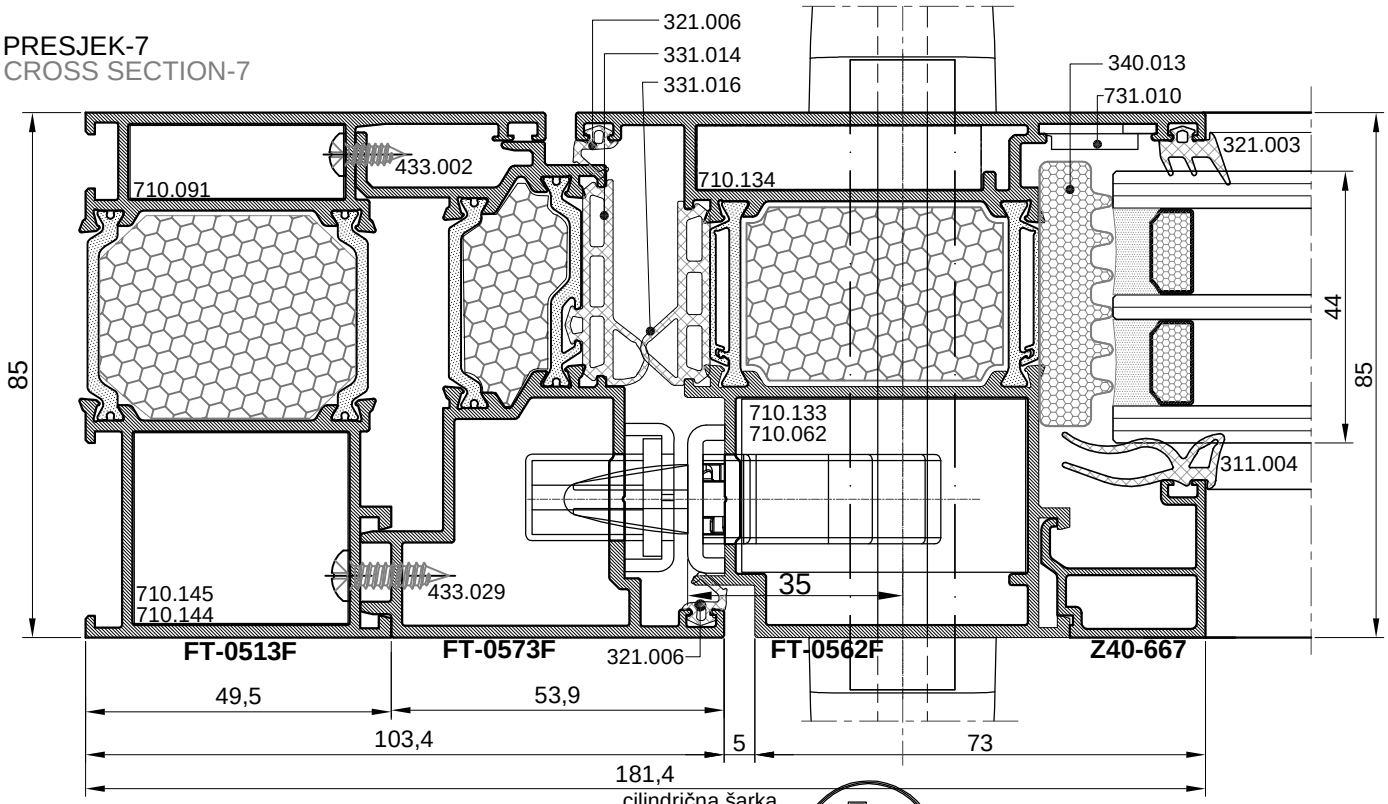

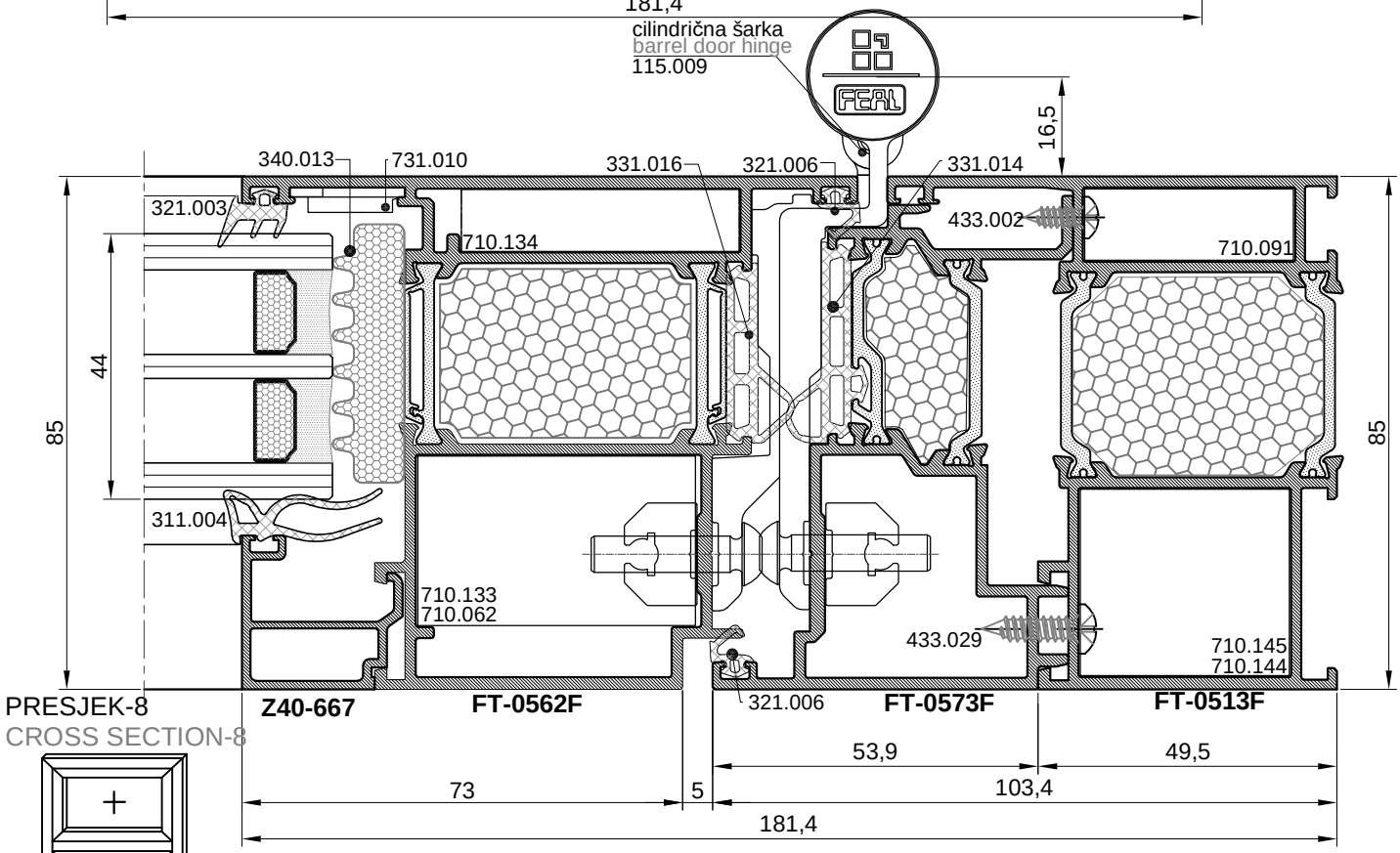

PRESJEK-8
CROSS SECTION-8

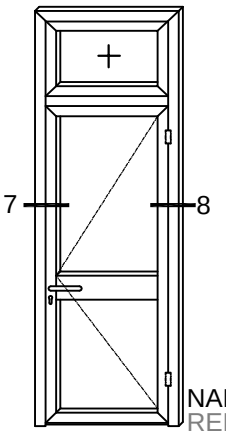

NAPOMENA: KRILO FT-0562F ZA BRAVU 35-icu
REMARK: SASH FT-0562F FOR LOCK - BACKSET 35

PRESJEK-7
CROSS SECTION-7

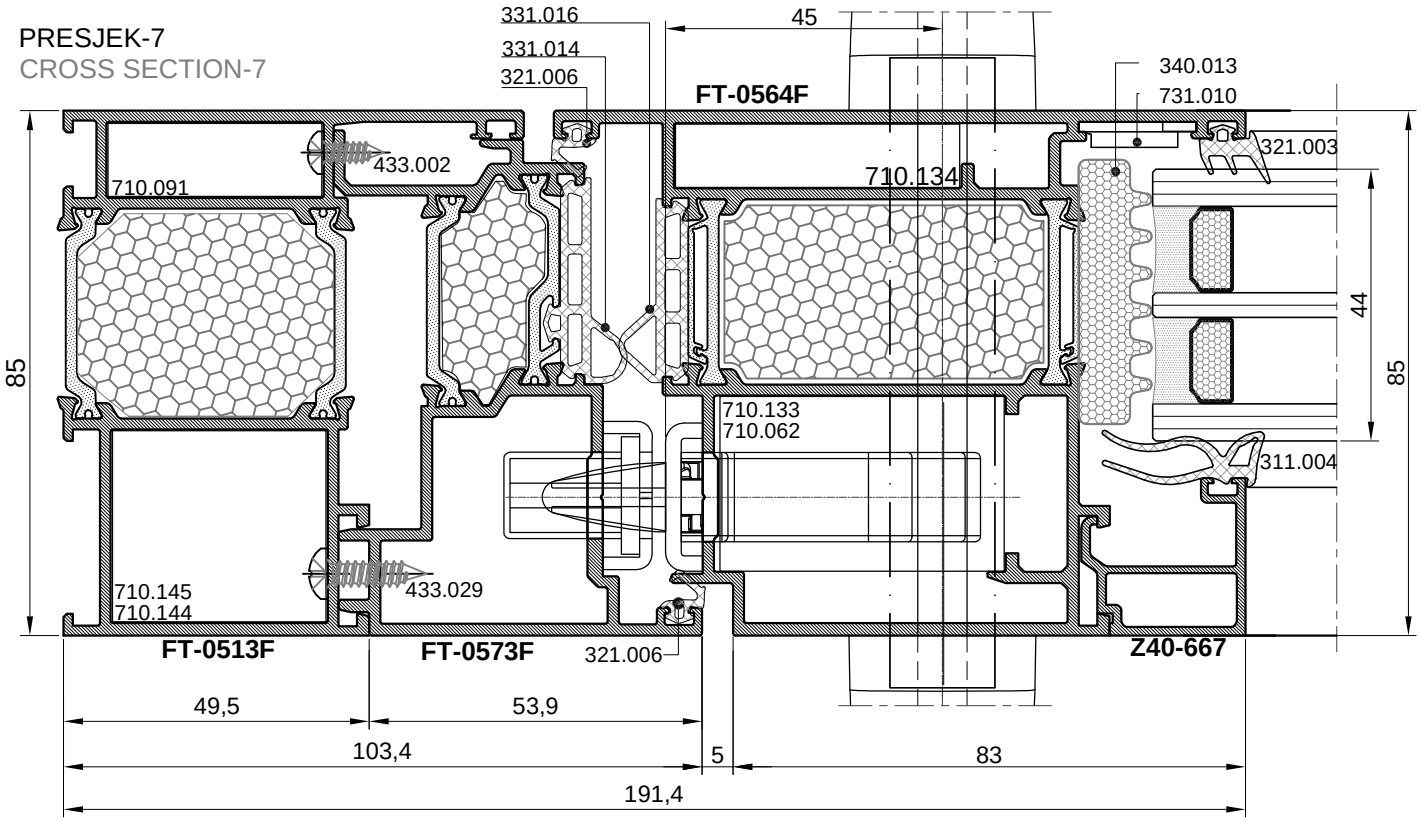

PRESJEK-8
CROSS SECTION-8

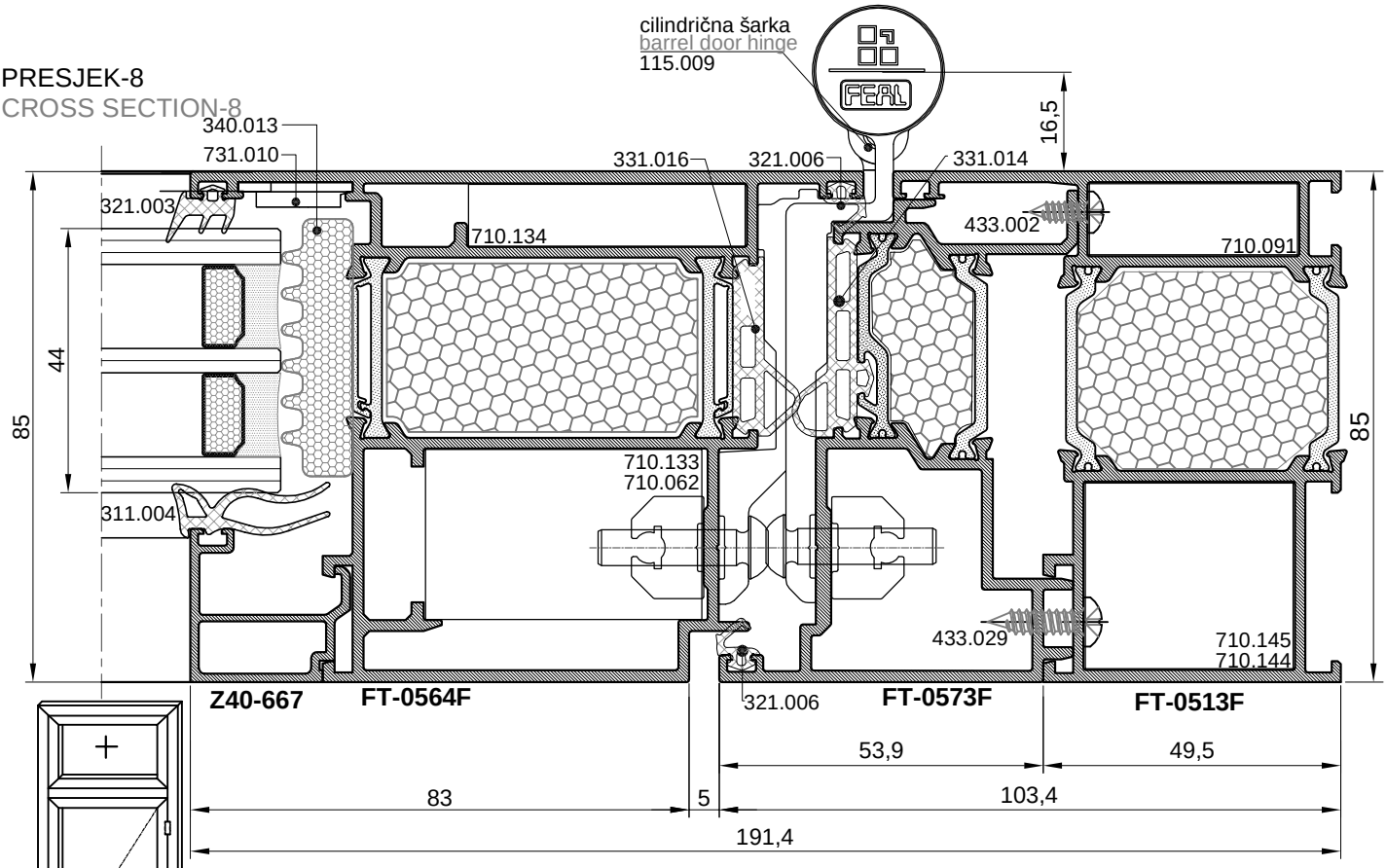

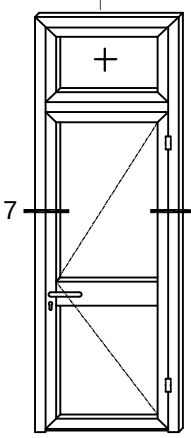

NAPOMENA: KRILO FT-0564F ZA BRAVU 45-icu
REMARK: SASH FT-0564F FOR LOCK - BACKSET 45

PRESJEK-8
CROSS SECTION-8

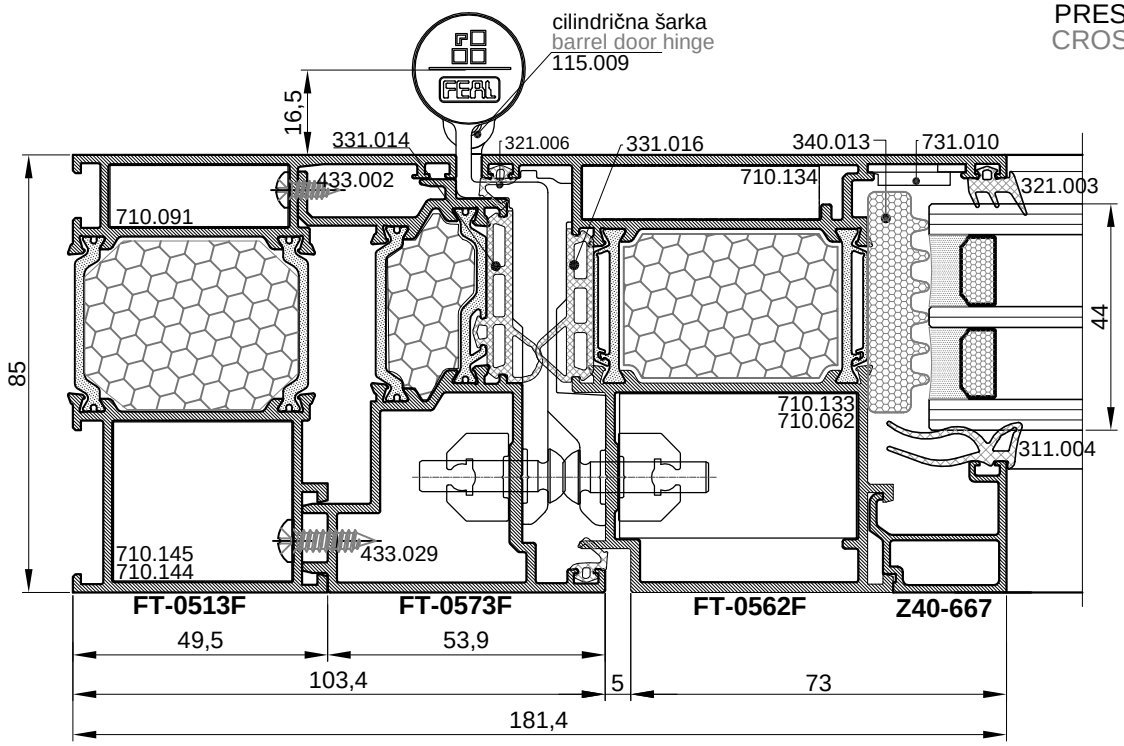

PRESJEK-3
CROSS SECTION-3

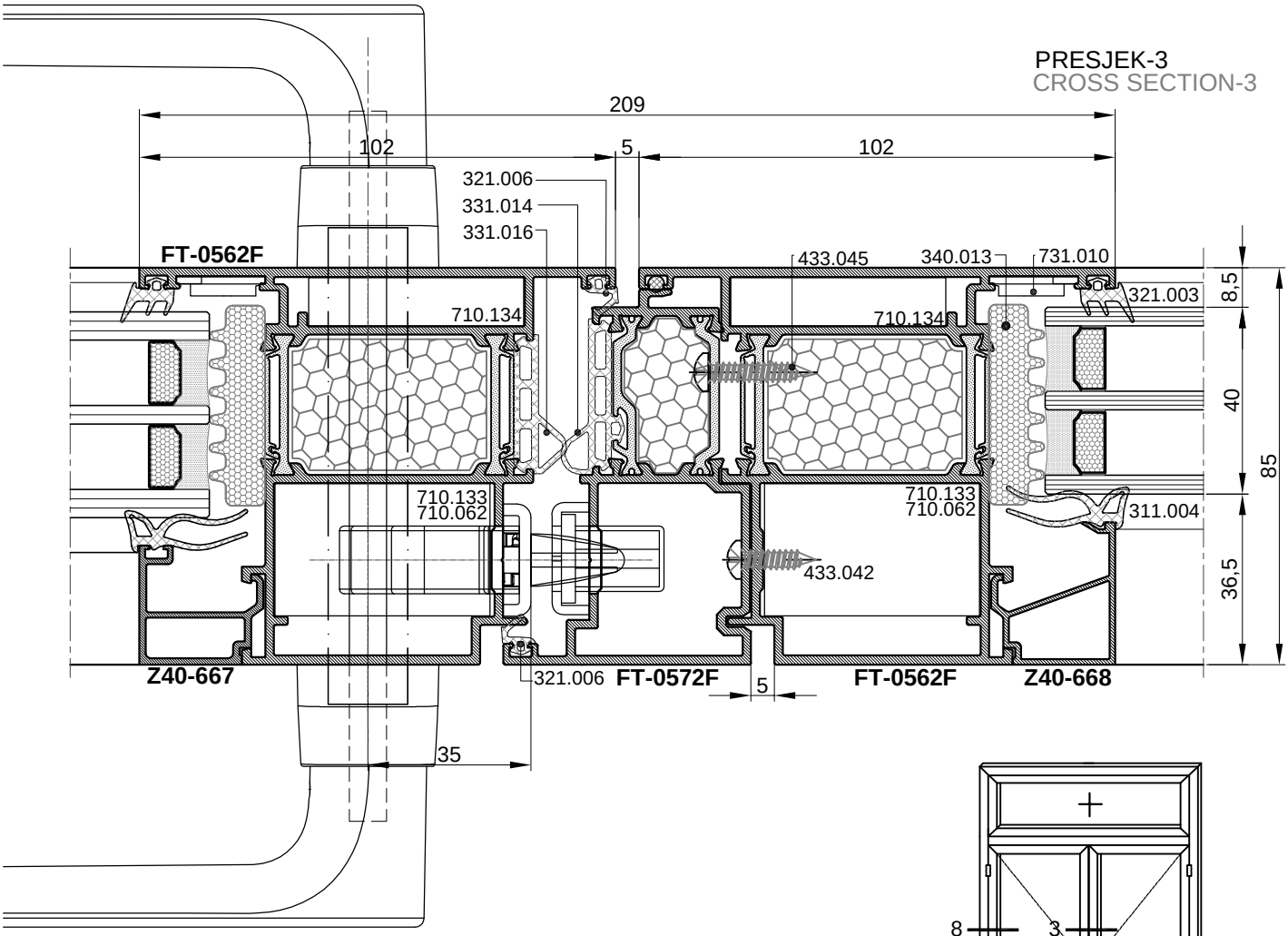

NAPOMENA: KRILO FT-0562F ZA BRAVU 45-icu
REMARK: SASH FT-0562F FOR LOCK -BACKSET 45

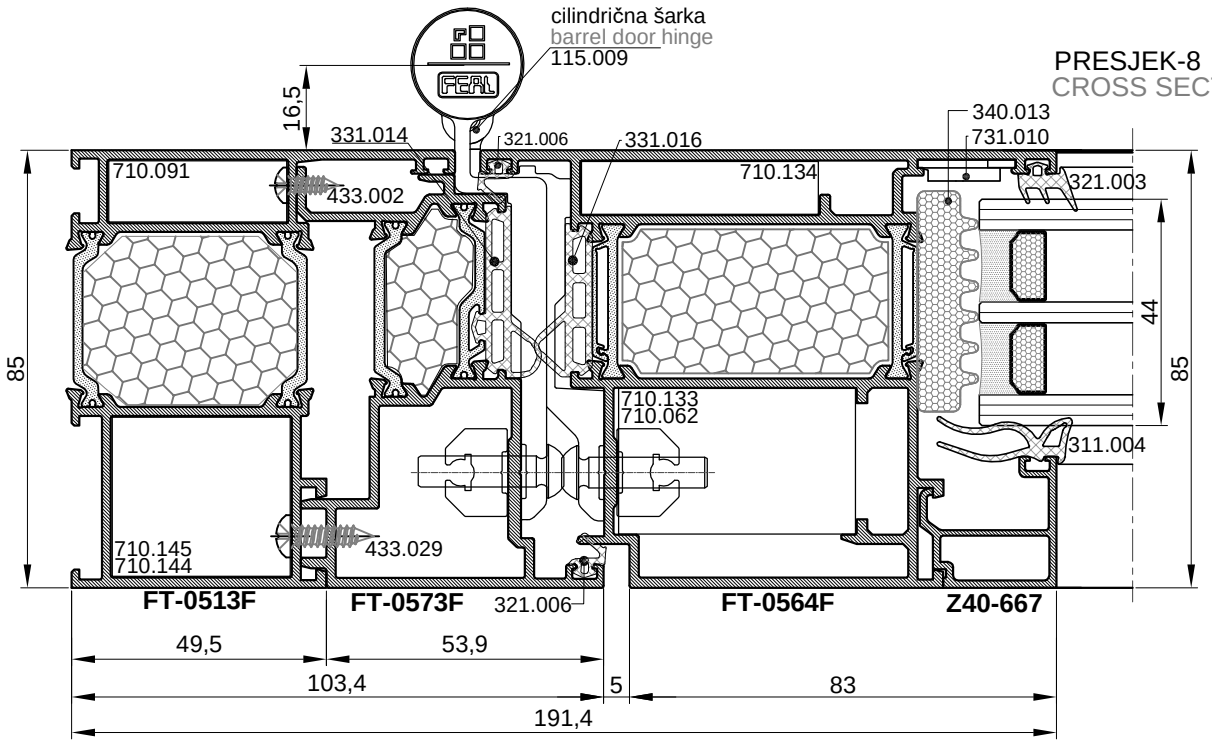

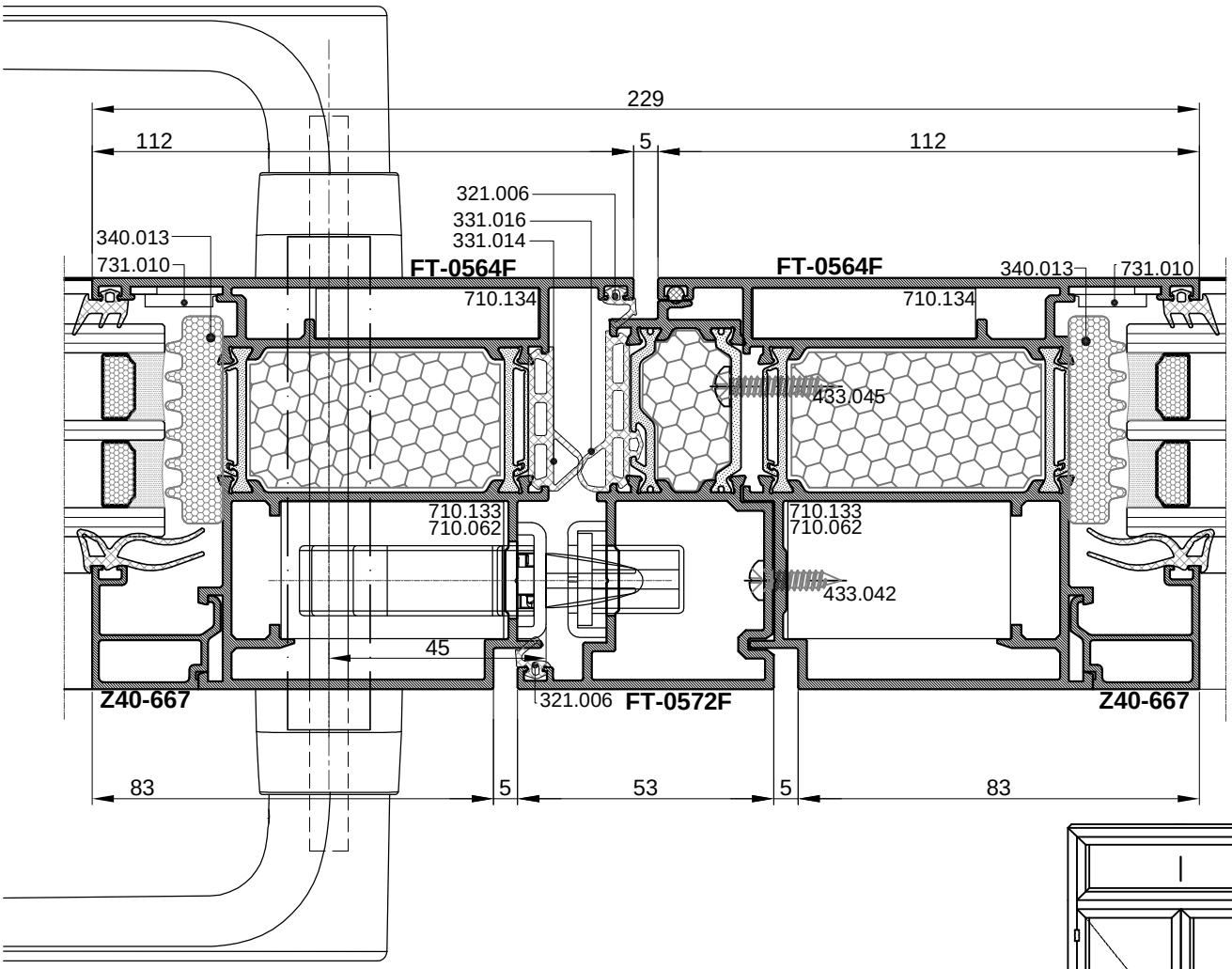

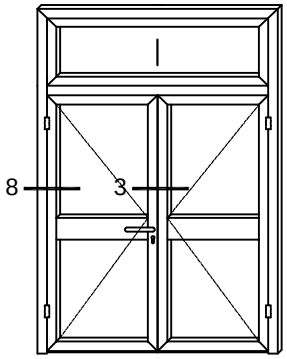

PRESJEK-3
CROSS SECTION-3

NAPOMENA: KRILO FT-0564F ZA BRAVU 45-icu
REMARK: SASH FT-0564F FOR LOCK -BACKSET 45

Vrata Termo 85 VS-otvaranje vani
Door Termo 85 VS-outward opening

PRESJEK-9
CROSS SECTION-9

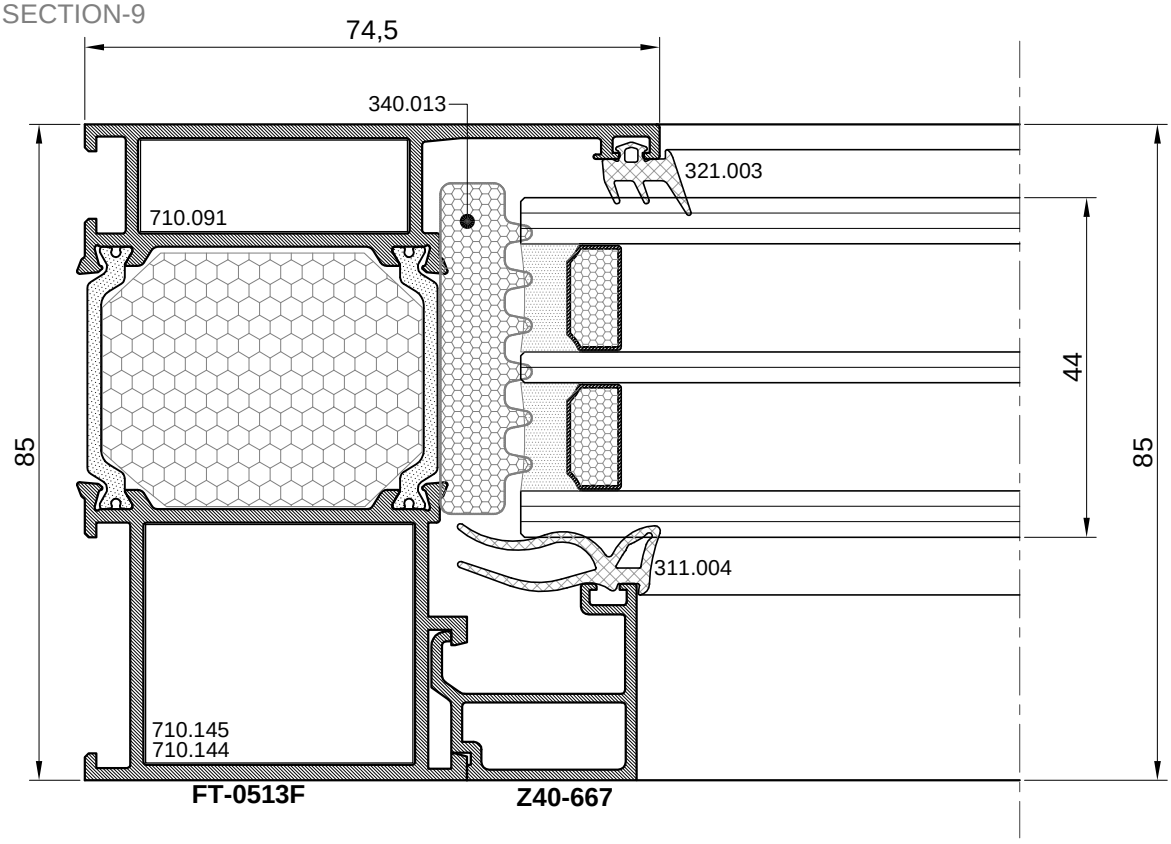

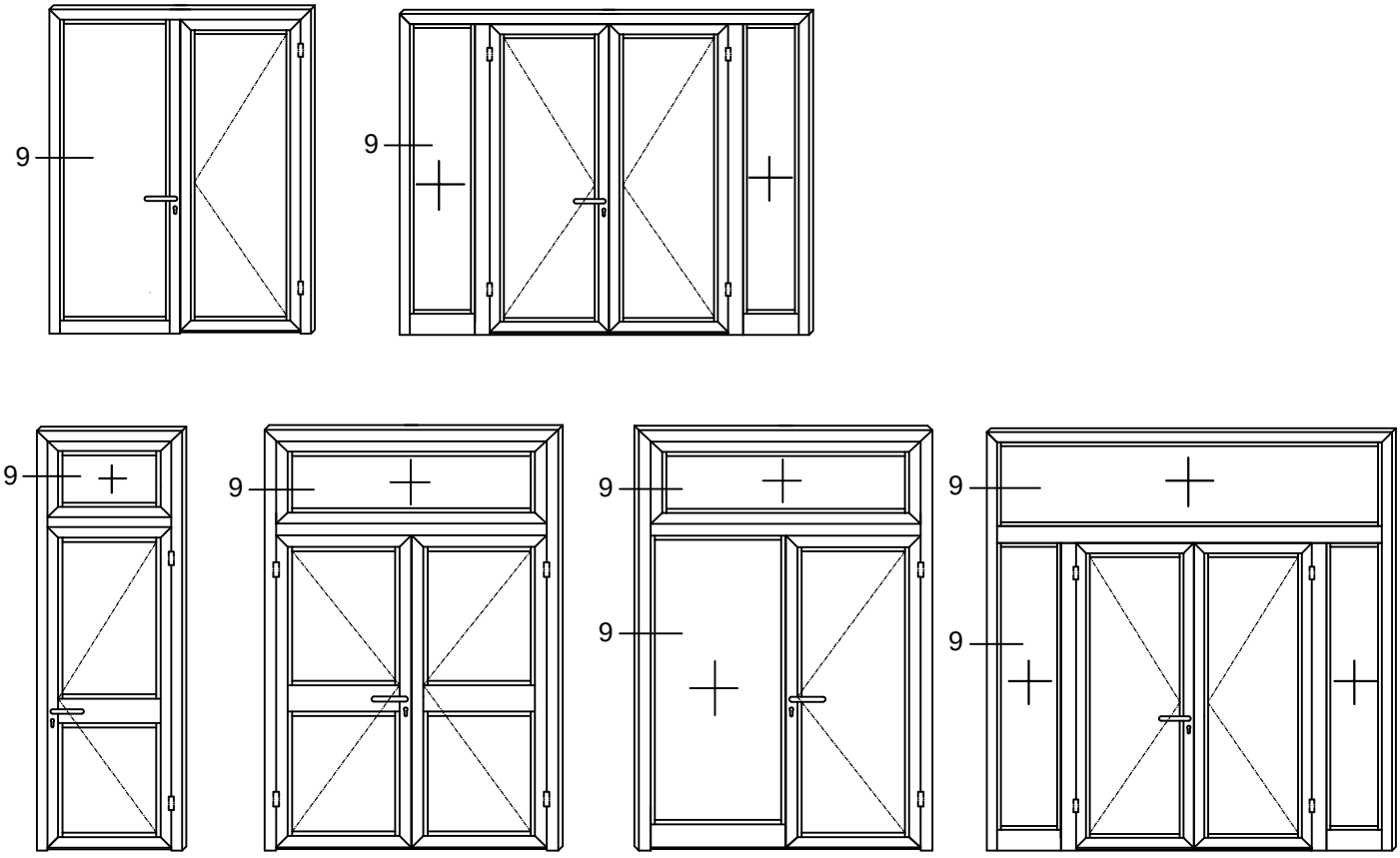

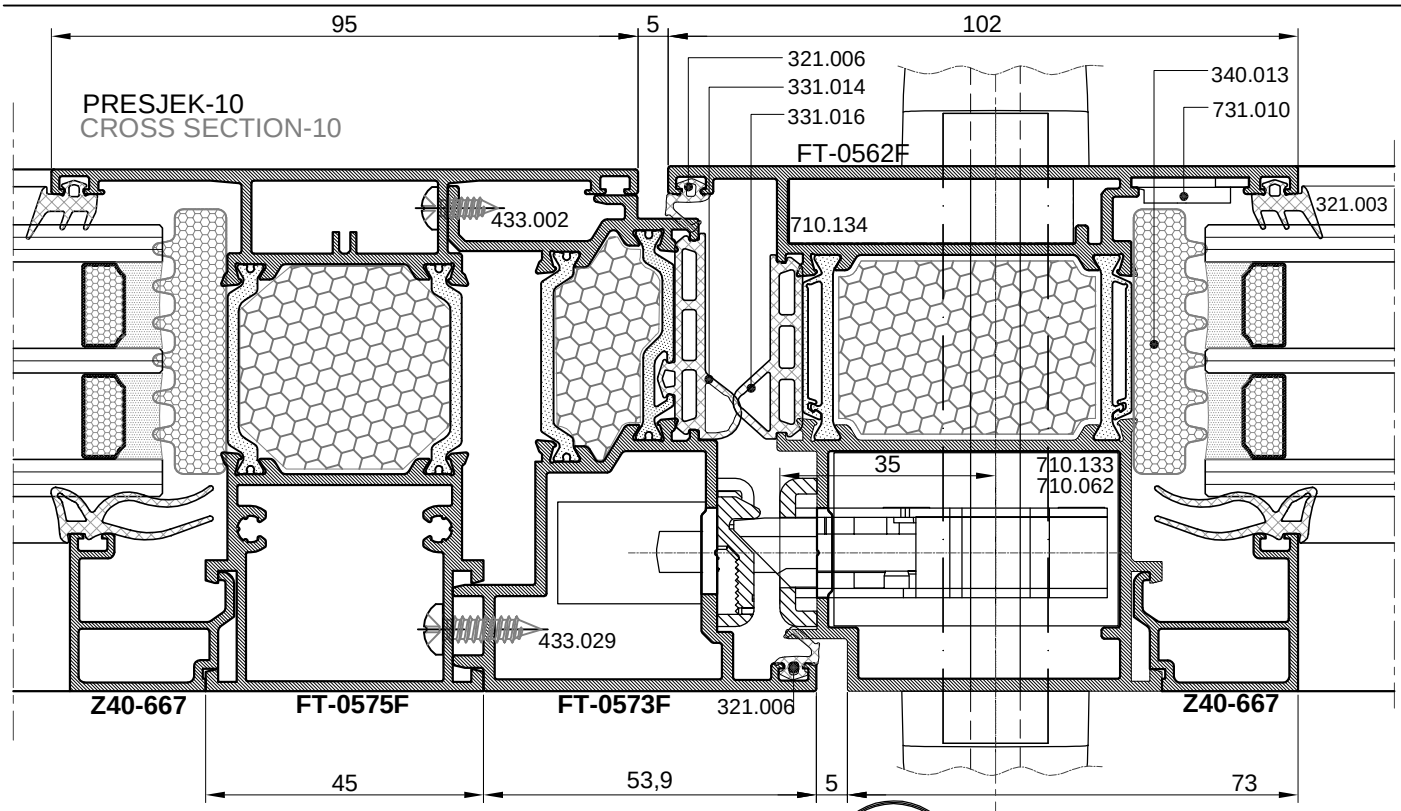

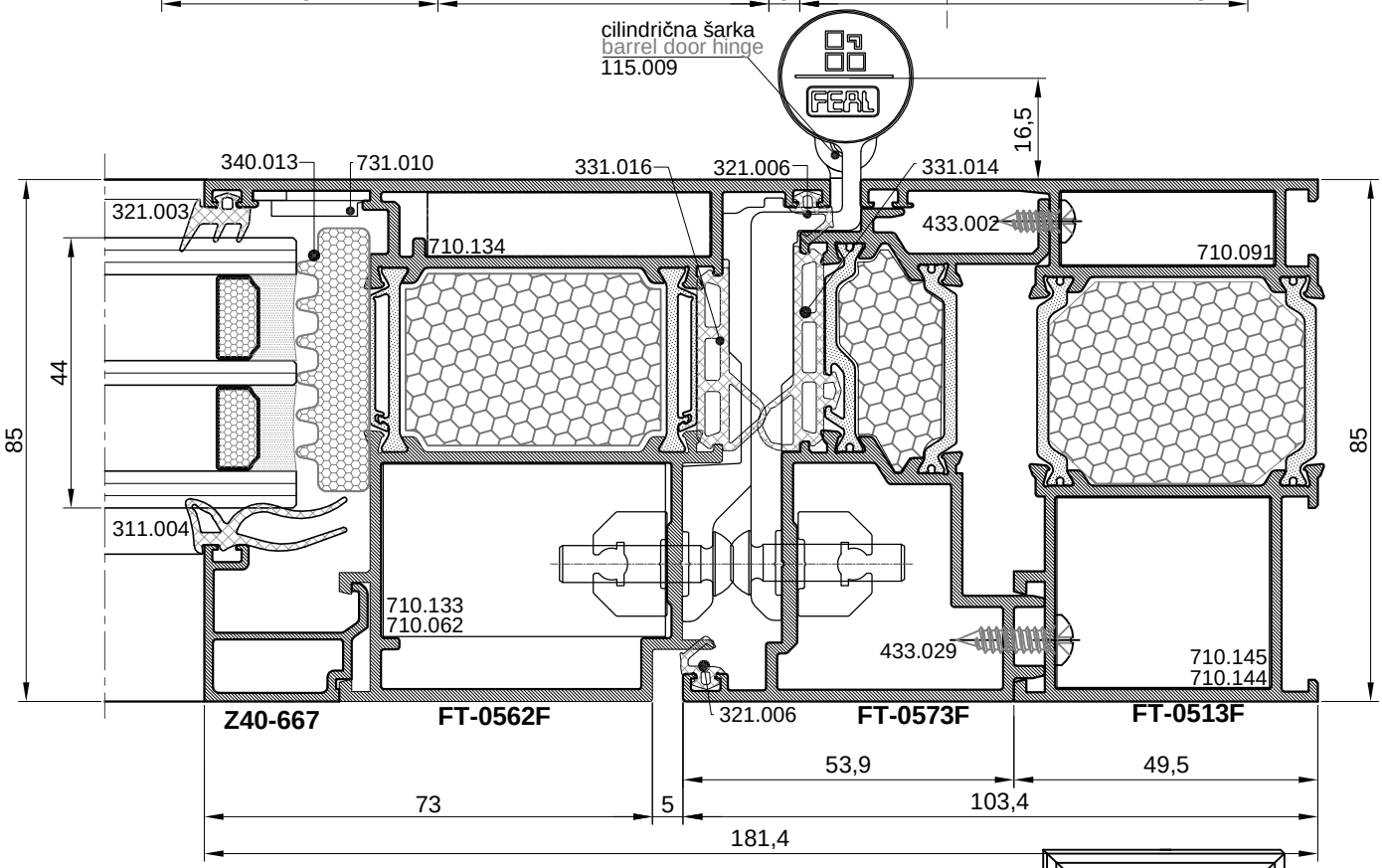

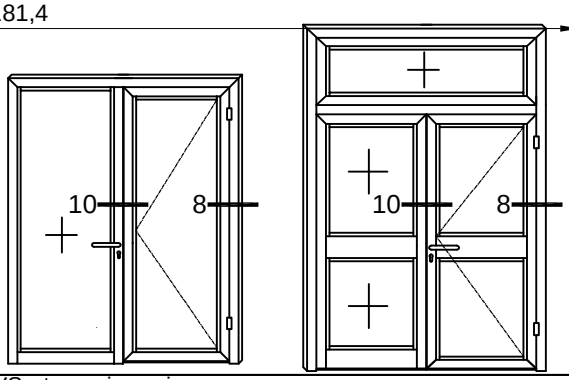

NAPOMENA: KRILO FT-0562F ZA BRAVU 35-icu
REMARK: SASH FT-0562F FOR LOCK - BACKSET 35

PRESJEK-10
CROSS SECTION-10

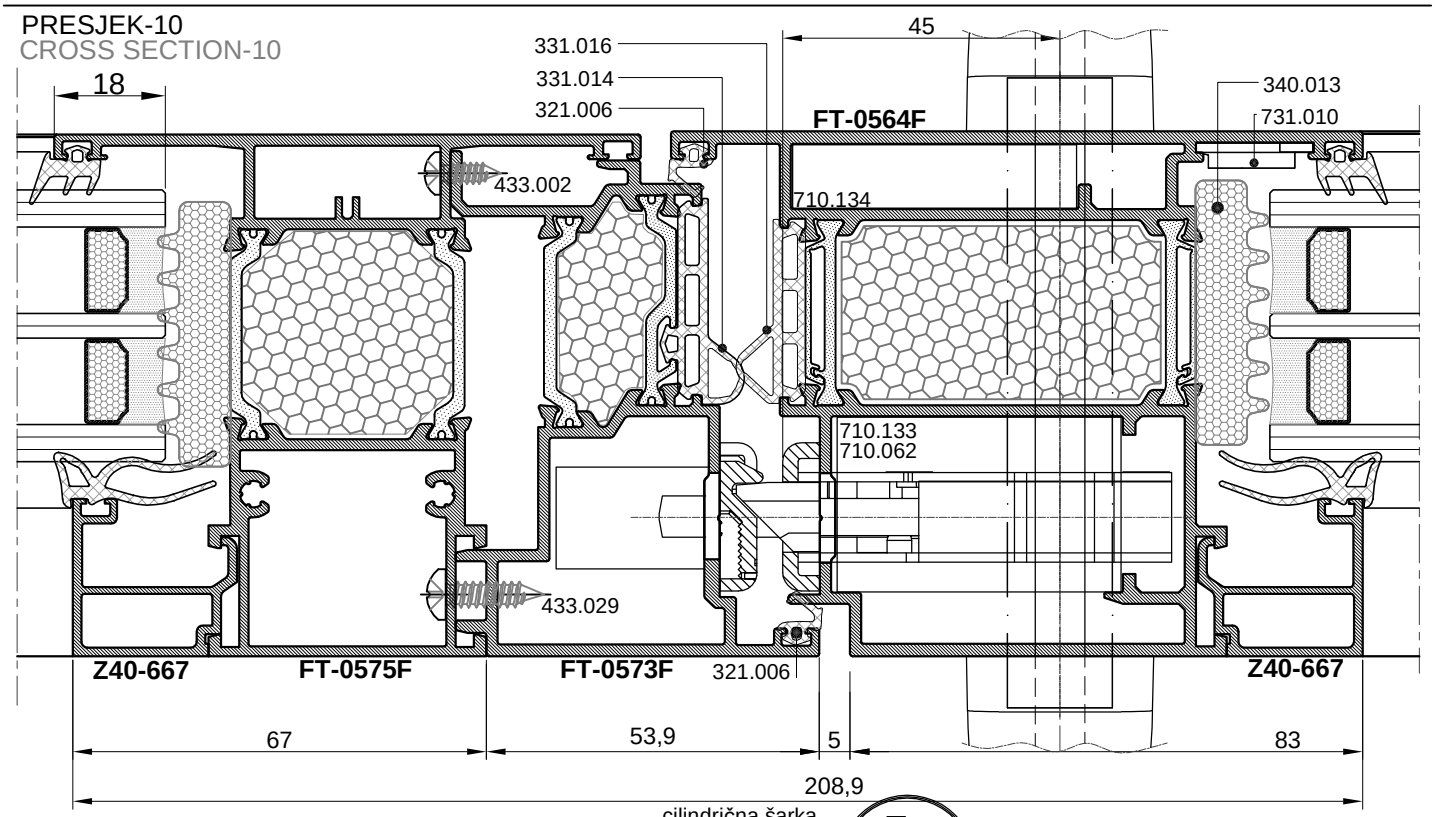

PRESJEK-8
CROSS SECTION-8

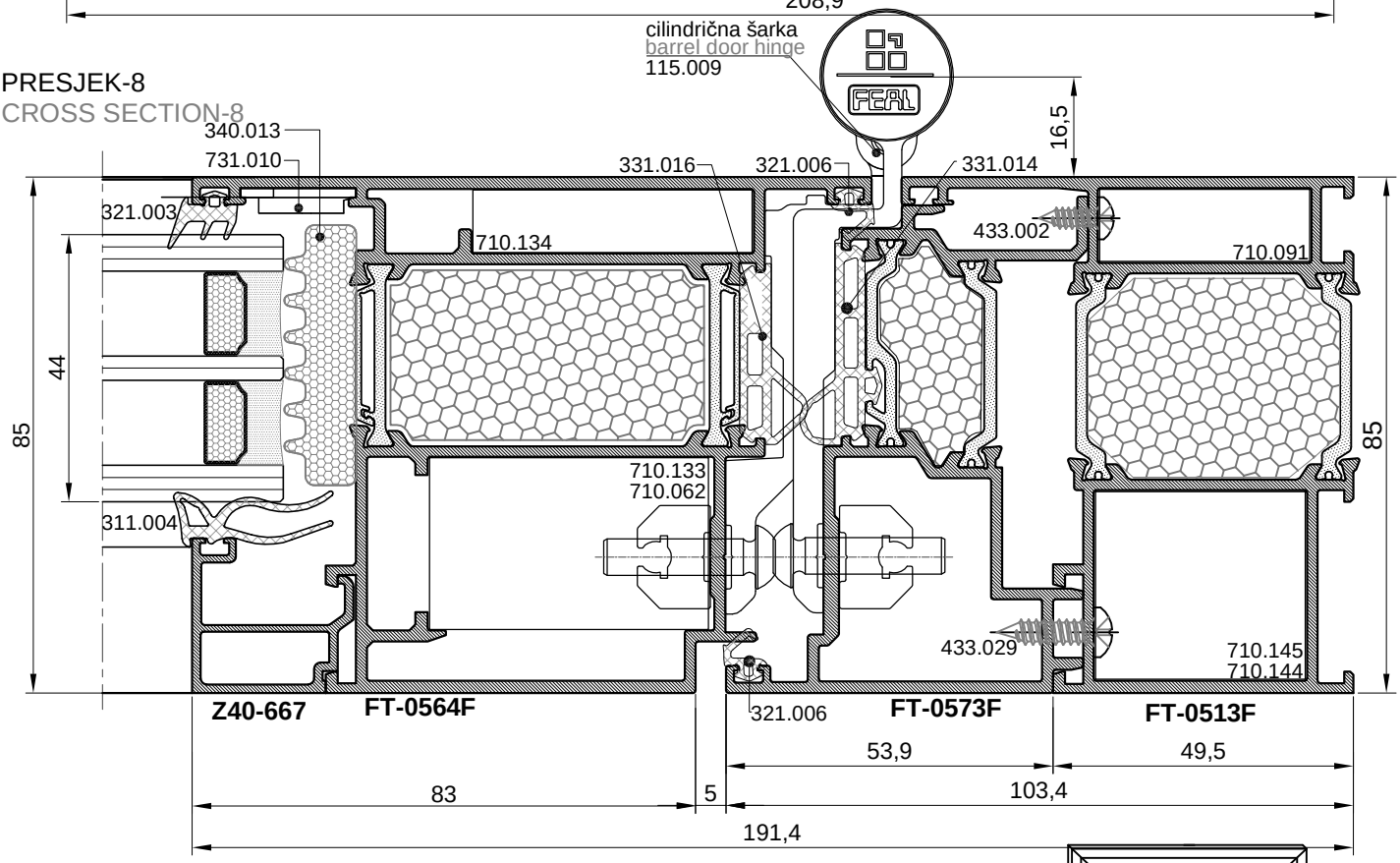

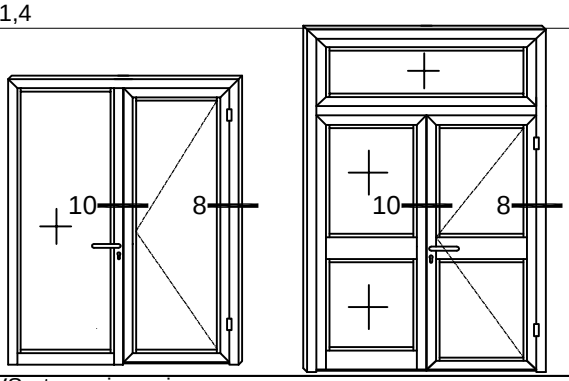

NAPOMENA: KRILO FT-0564F ZA BRAVU 45-icu
REMARK: SASH FT-0564F FOR LOCK - BACKSET 45

PRESJEK-10
CROSS SECTION-10

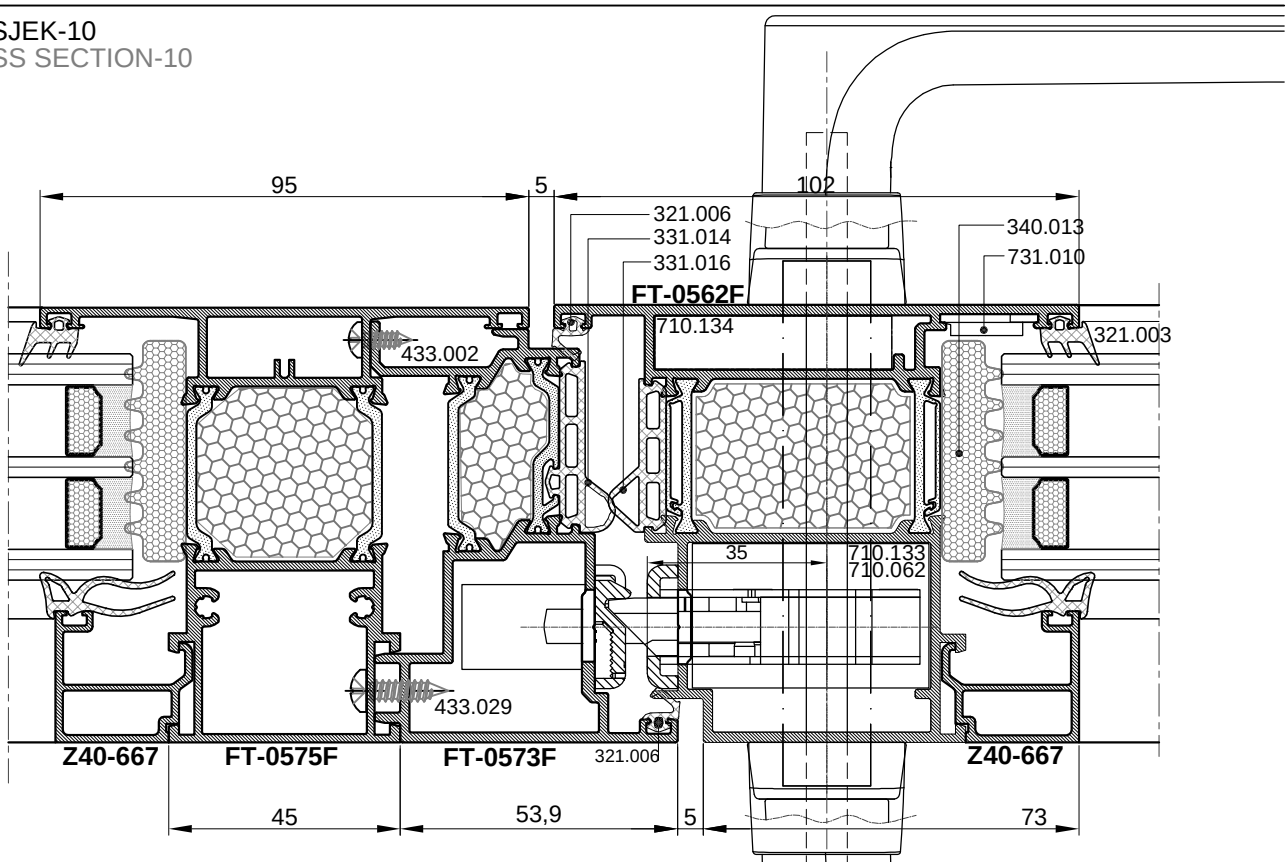

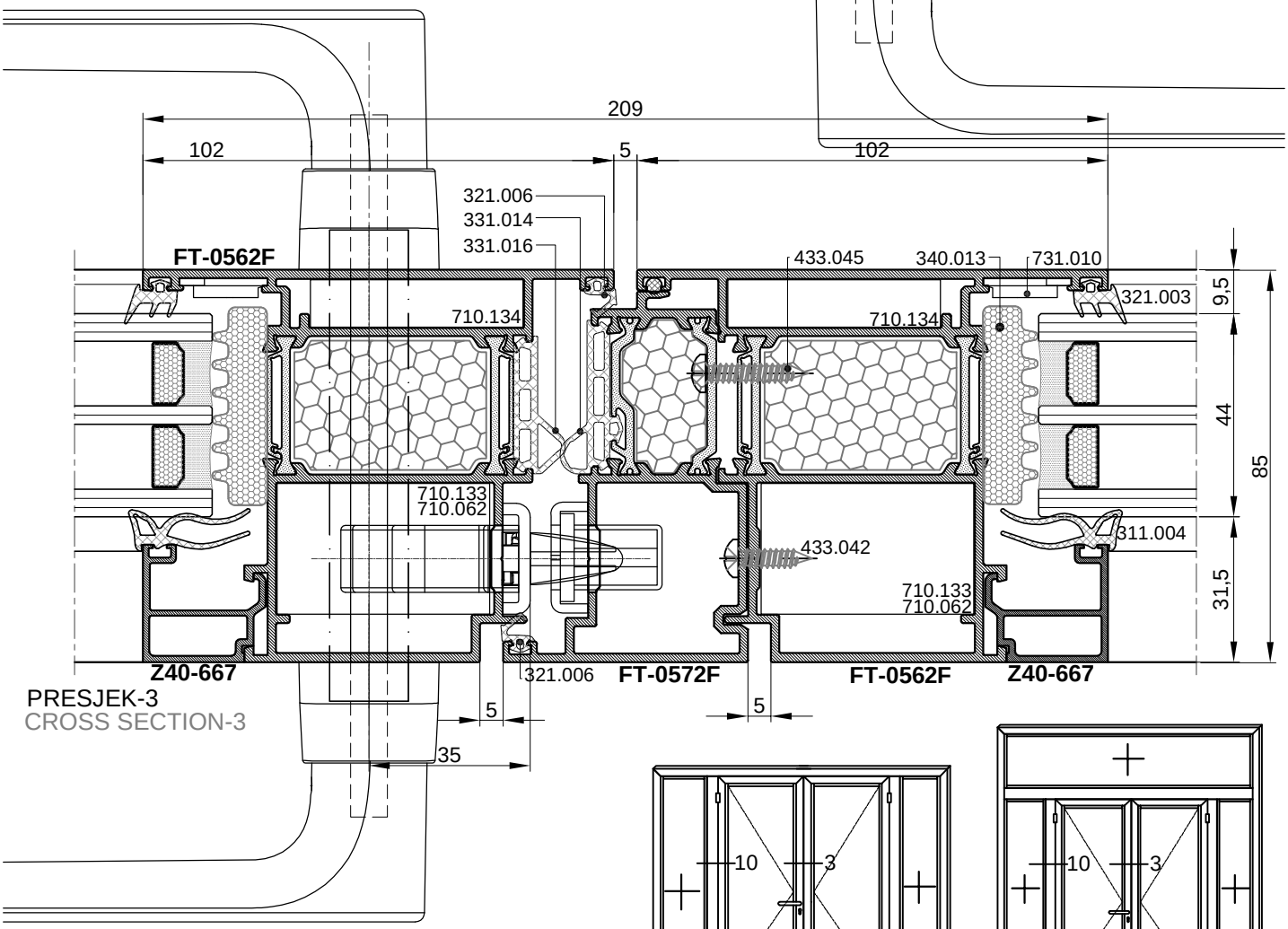

PRESJEK-3
CROSS SECTION-3

PRESJEK-10
CROSS SECTION-10

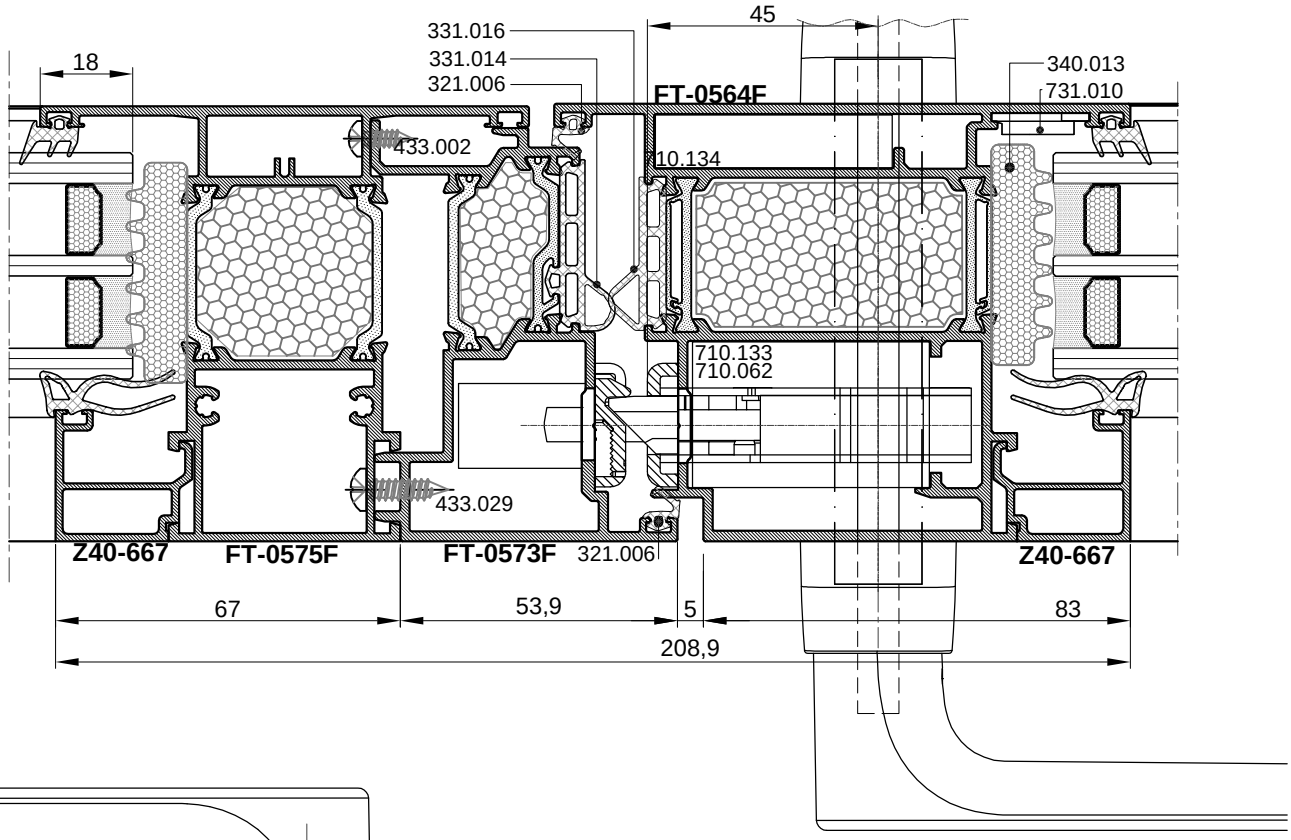

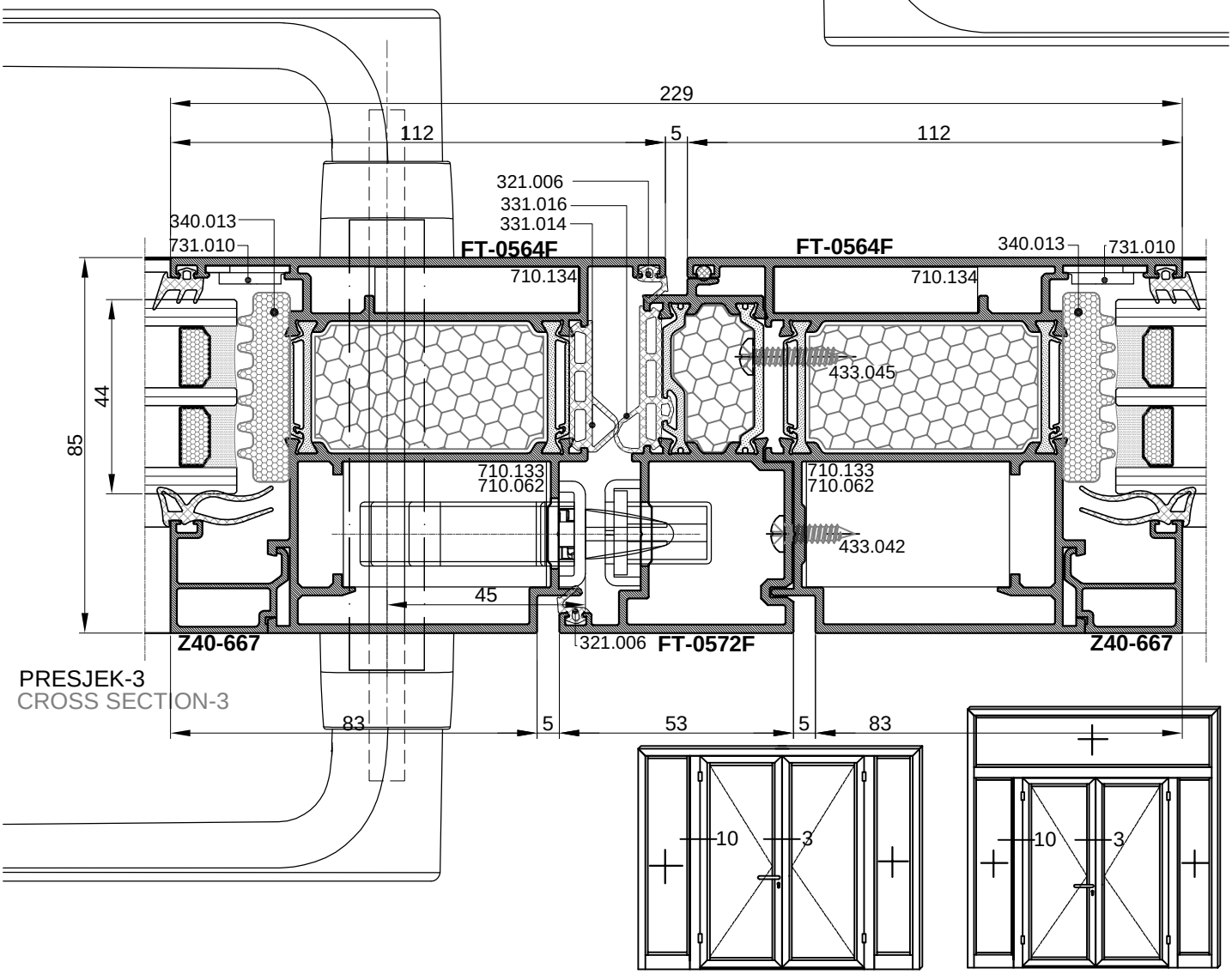

PRESJEK-3
CROSS SECTION-3

PRESJEK-4
CROSS SECTION-4

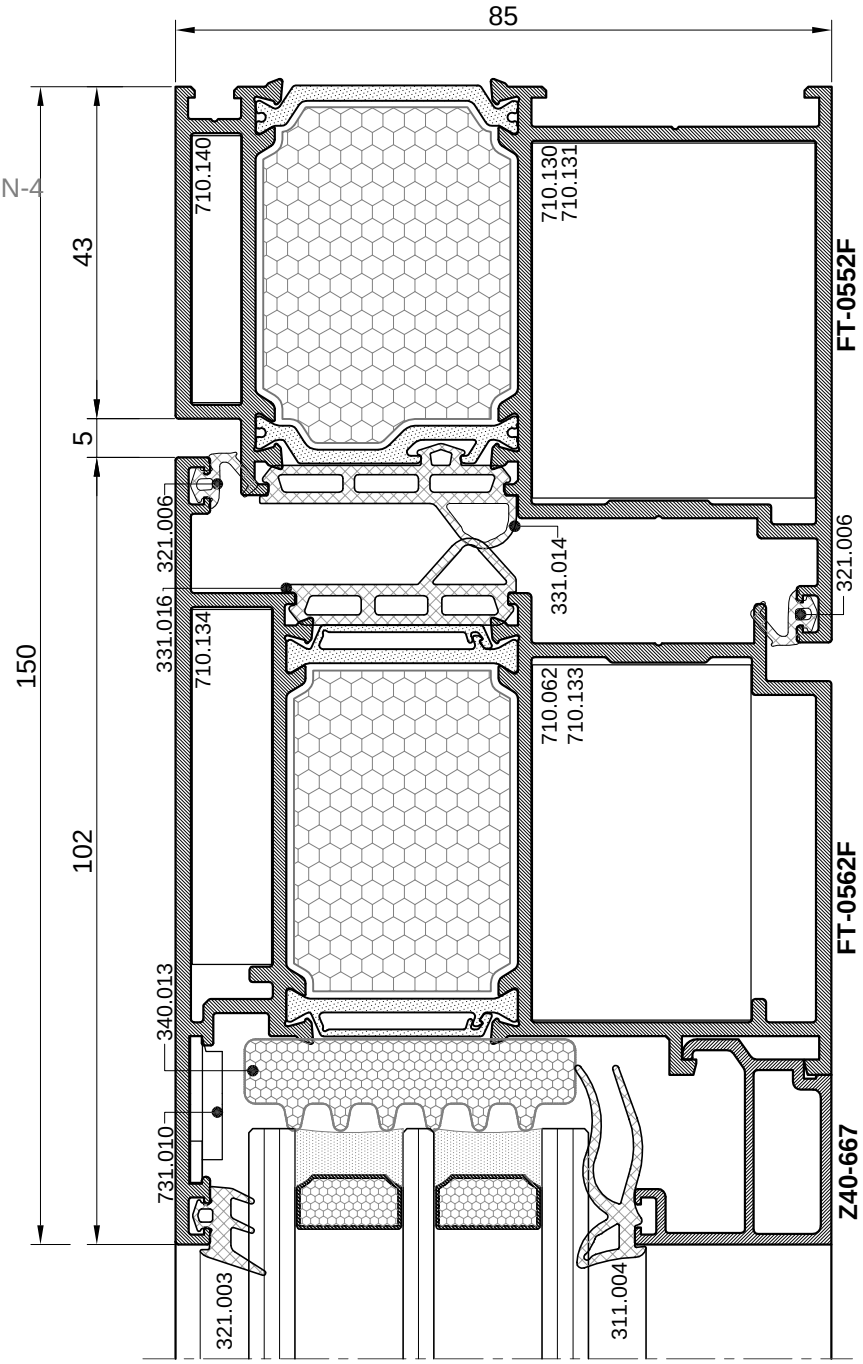

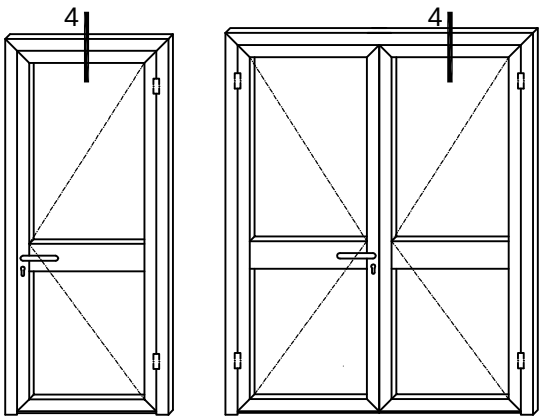

NAPOMENA: KRILO FT-0562F ZA BRAVU 35-icu
REMARK: SASH FT-0562F FOR LOCK -BACKSET 35

PRESJEK-4
CROSS SECTION-4

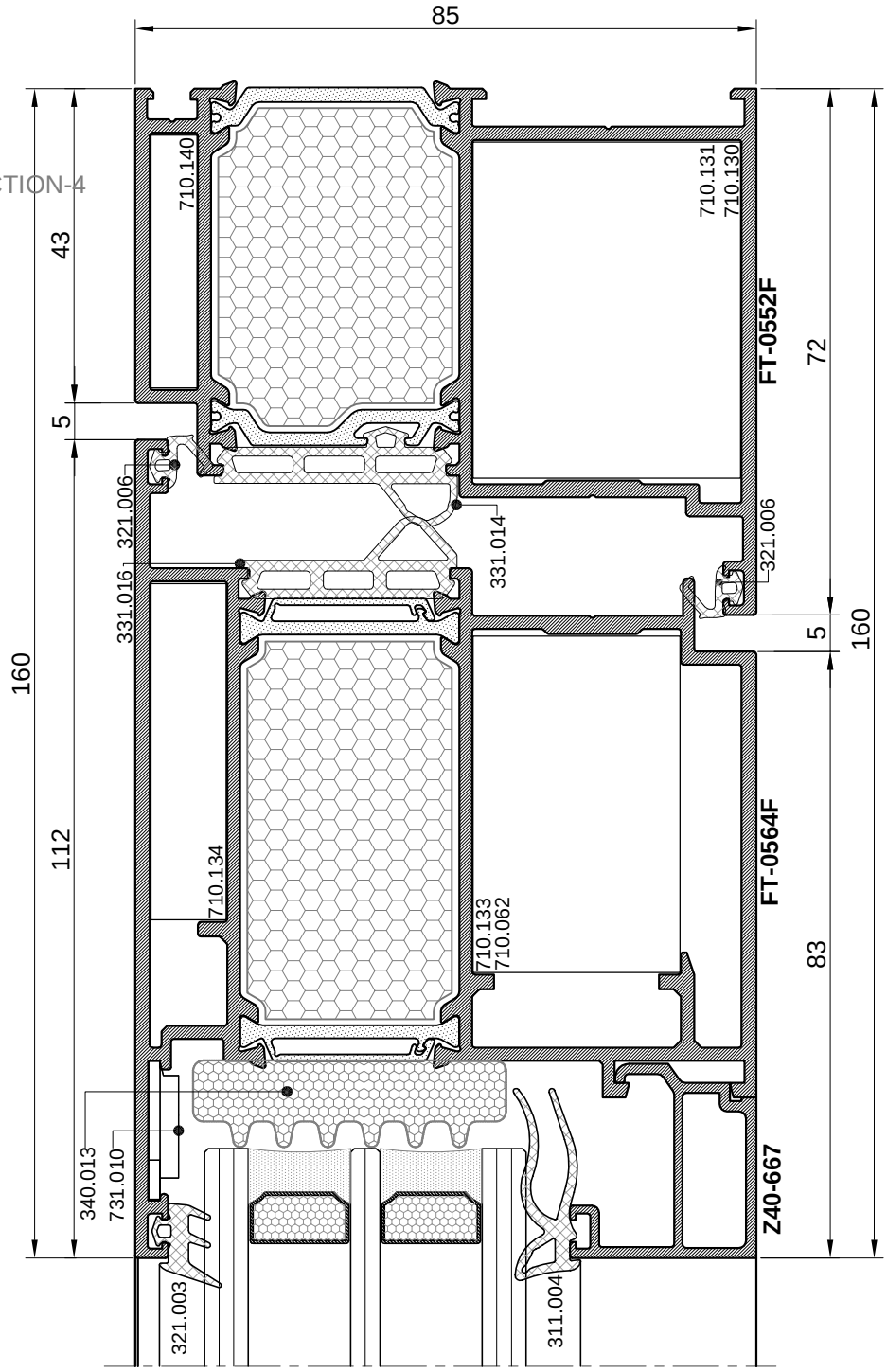

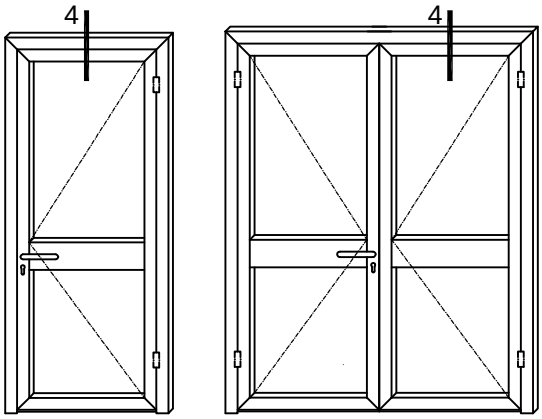

NAPOMENA: KRILO FT-0564F ZA BRAVU 45-icu
REMARK: SASH FT-0564F FOR LOCK - BACKSET 45

PRESJEK-5
CROSS SECTION-5

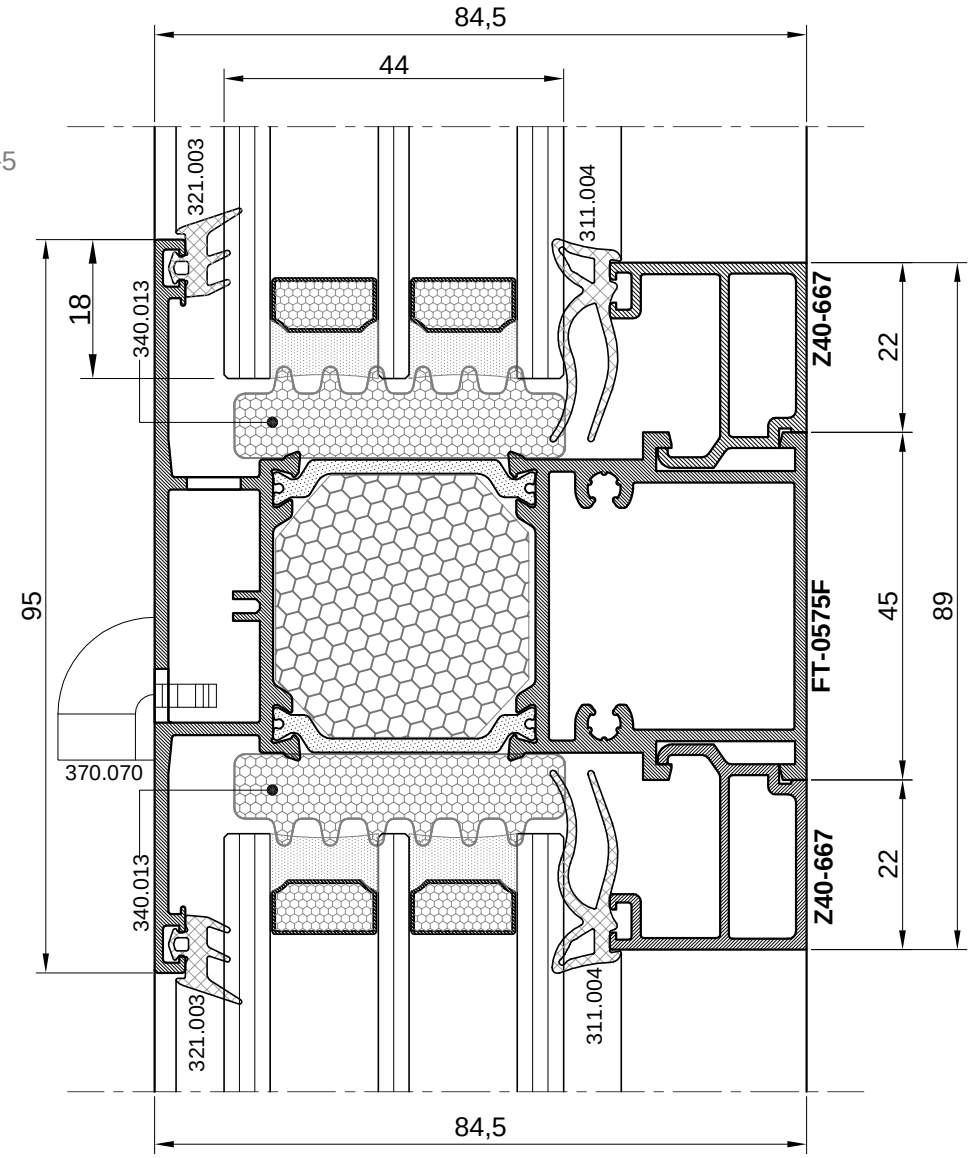

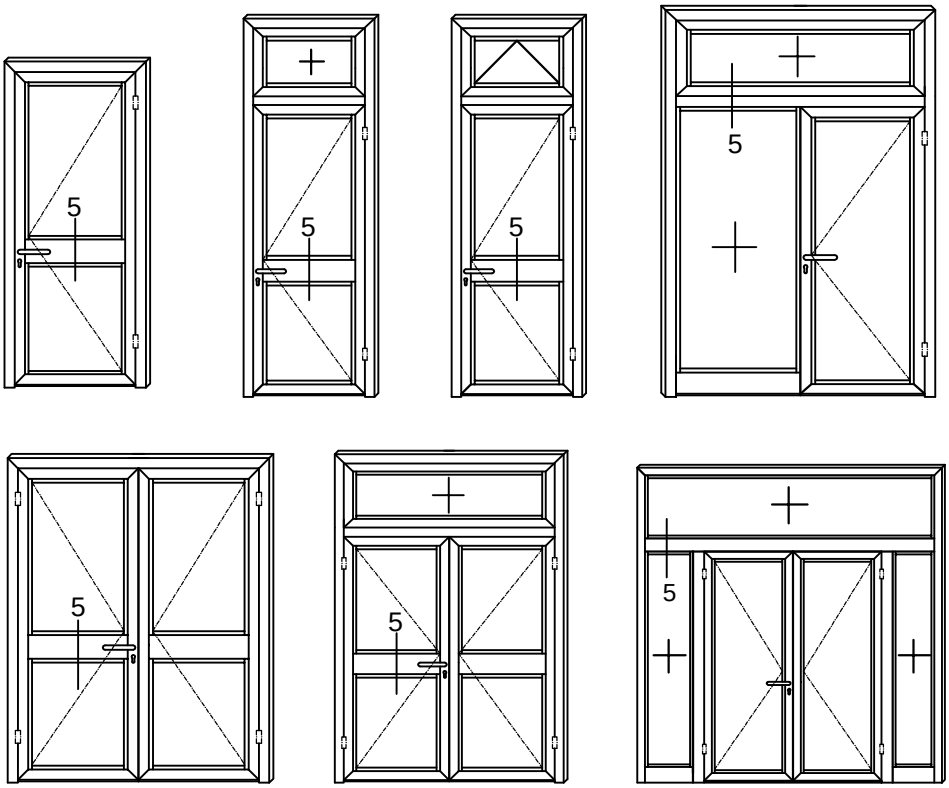

PRESJEK-6
CROSS SECTION-6

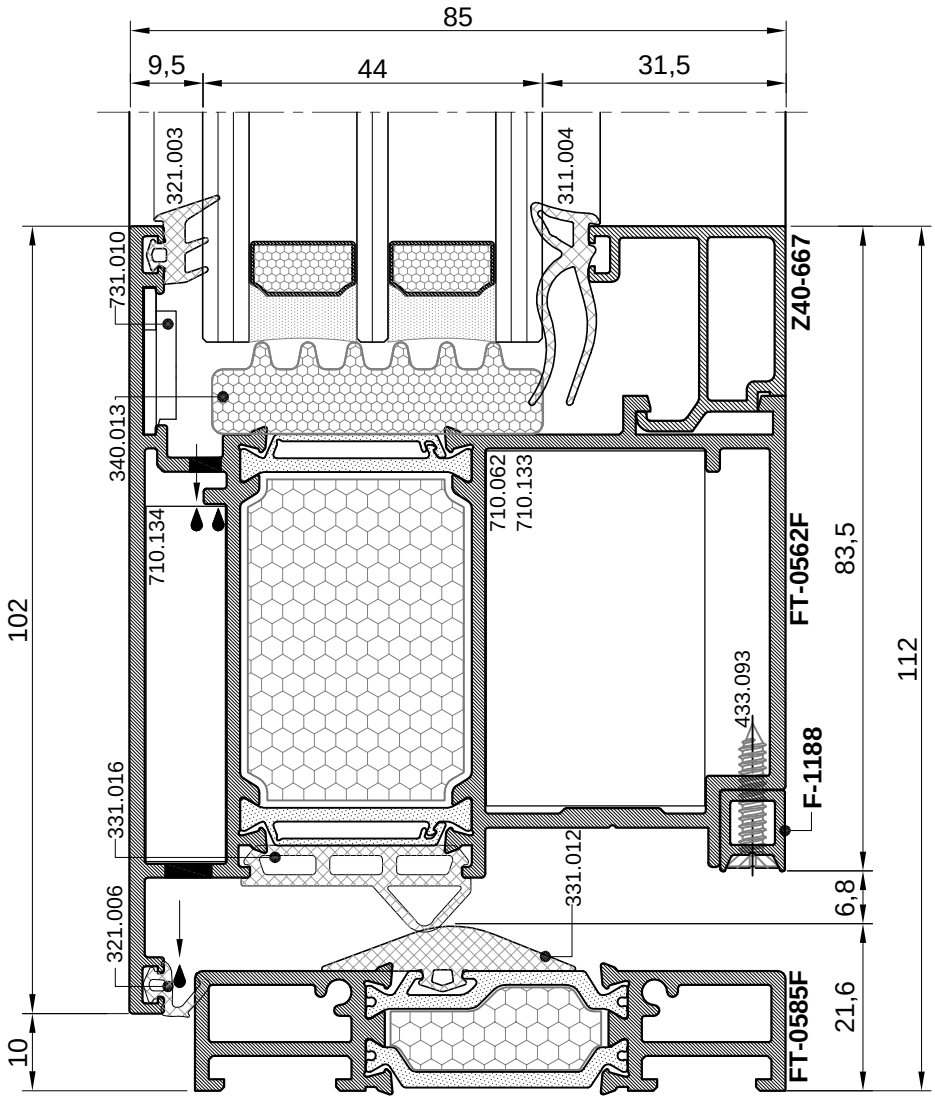

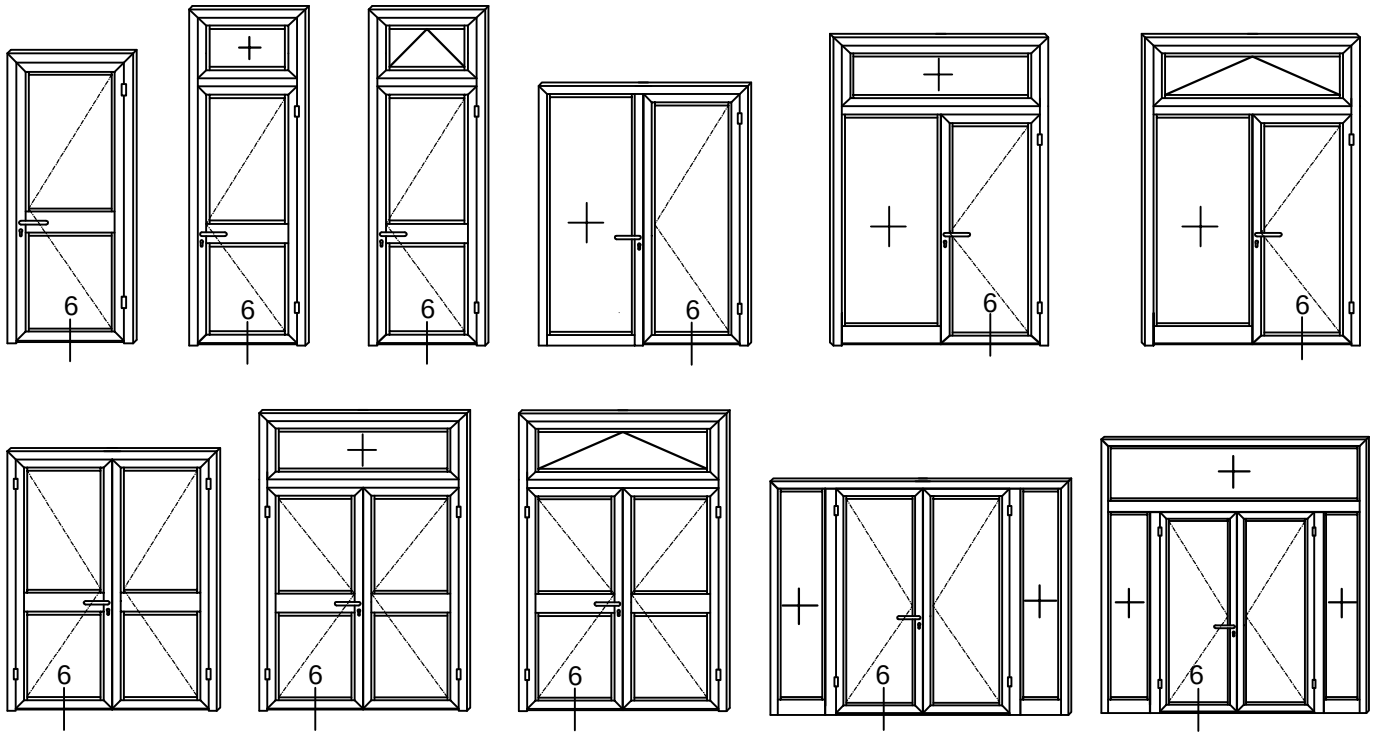

NAPOMENA: KRILO FT-0562F ZA BRAVU 35-icu
REMARK: SASH FT-0562F FOR LOCK -BACKSET 35

PRESJEK-6
CROSS SECTION-6

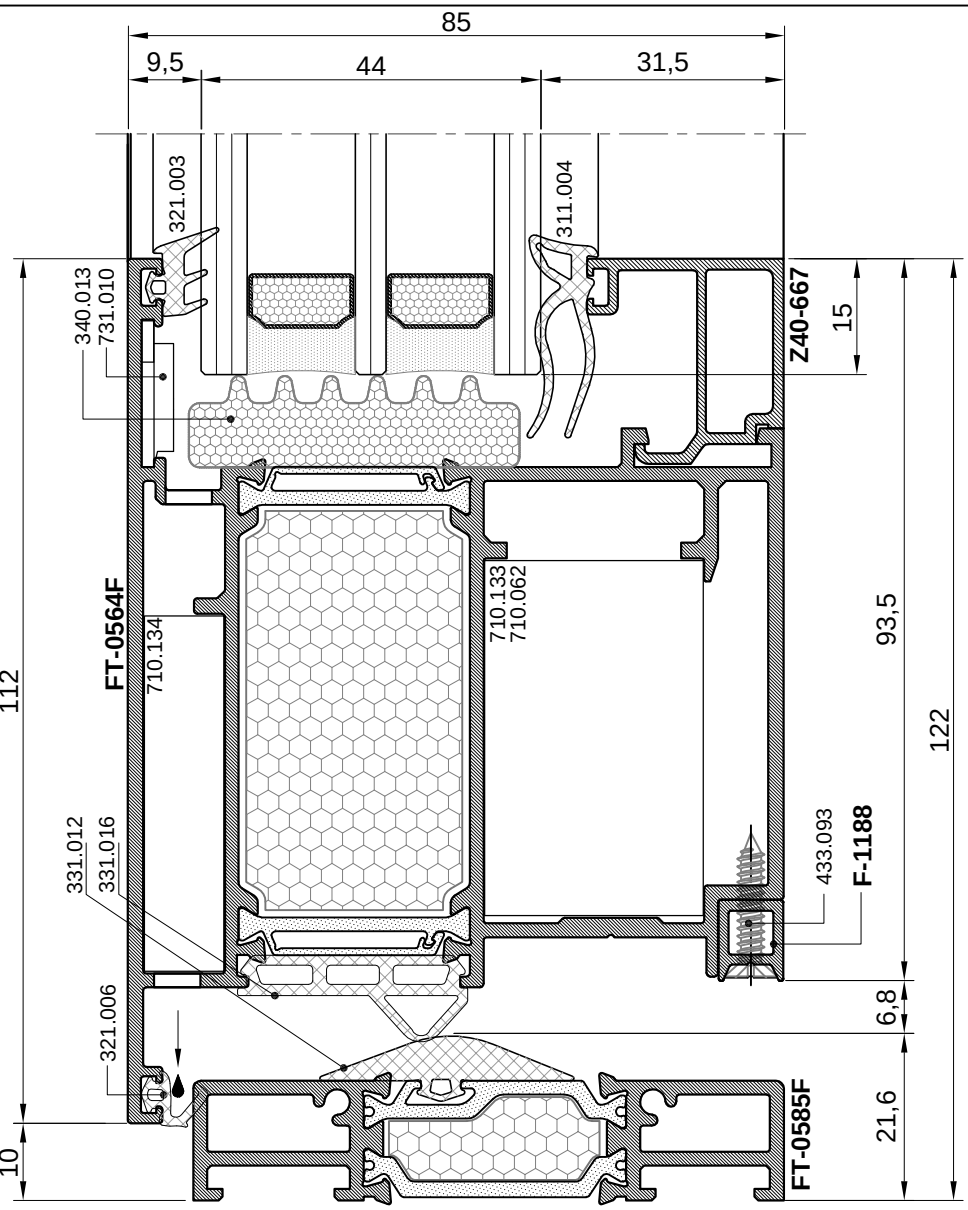

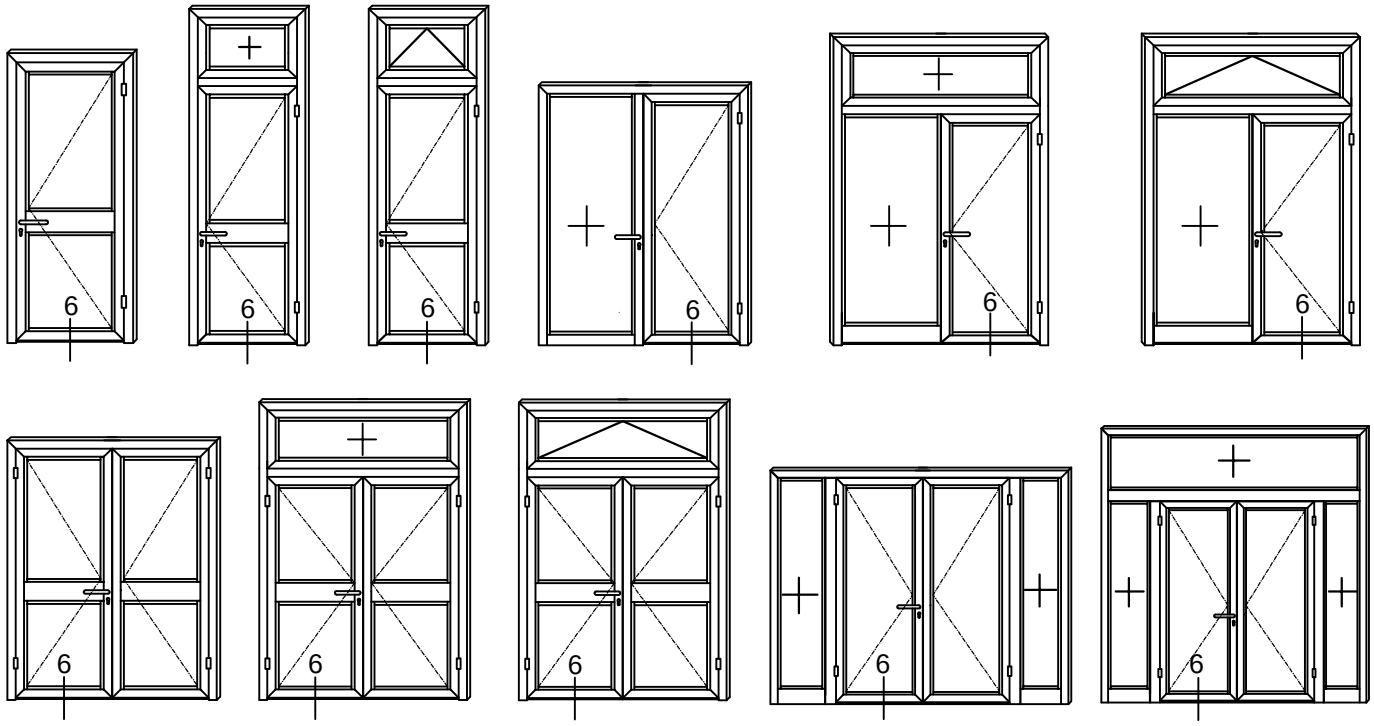

NAPOMENA: KRILO FT-0564F ZA BRAVU 45-icu
REMARK: SASH FT-0564F FOR LOCK -BACKSET 45

PRESJEK-11
CROSS SECTION-11

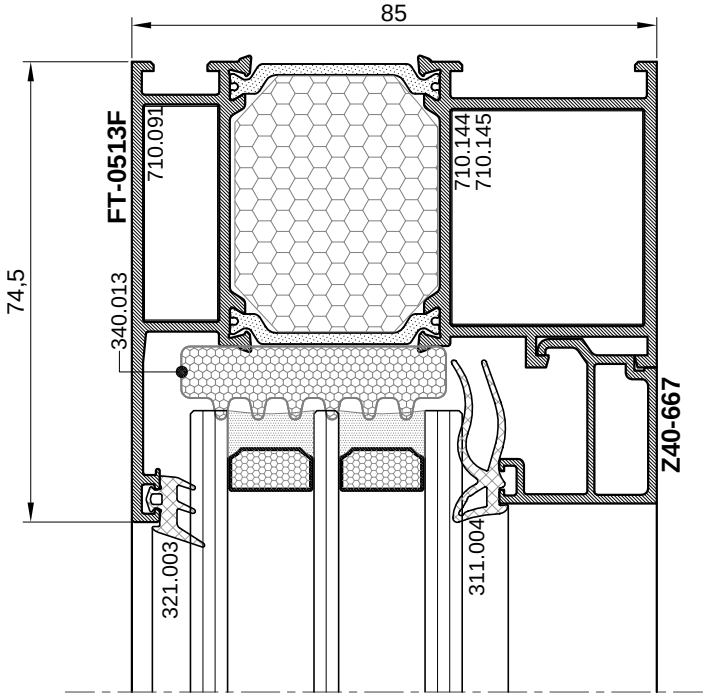

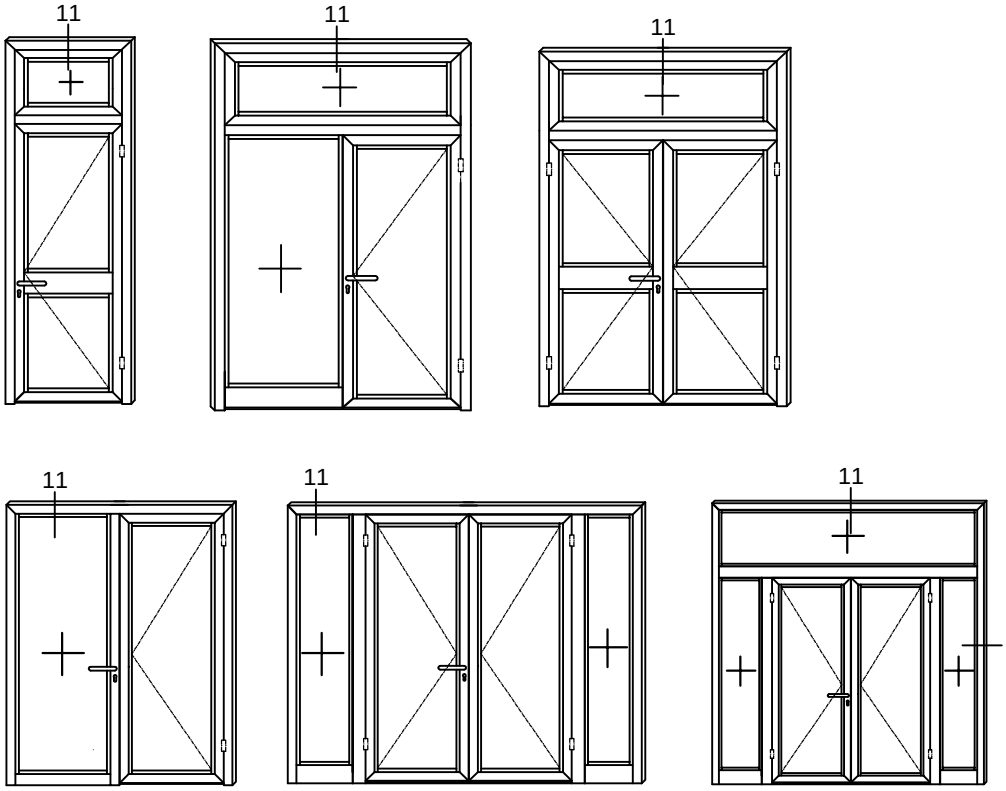

PRESJEK-12
CROSS SECTION-12

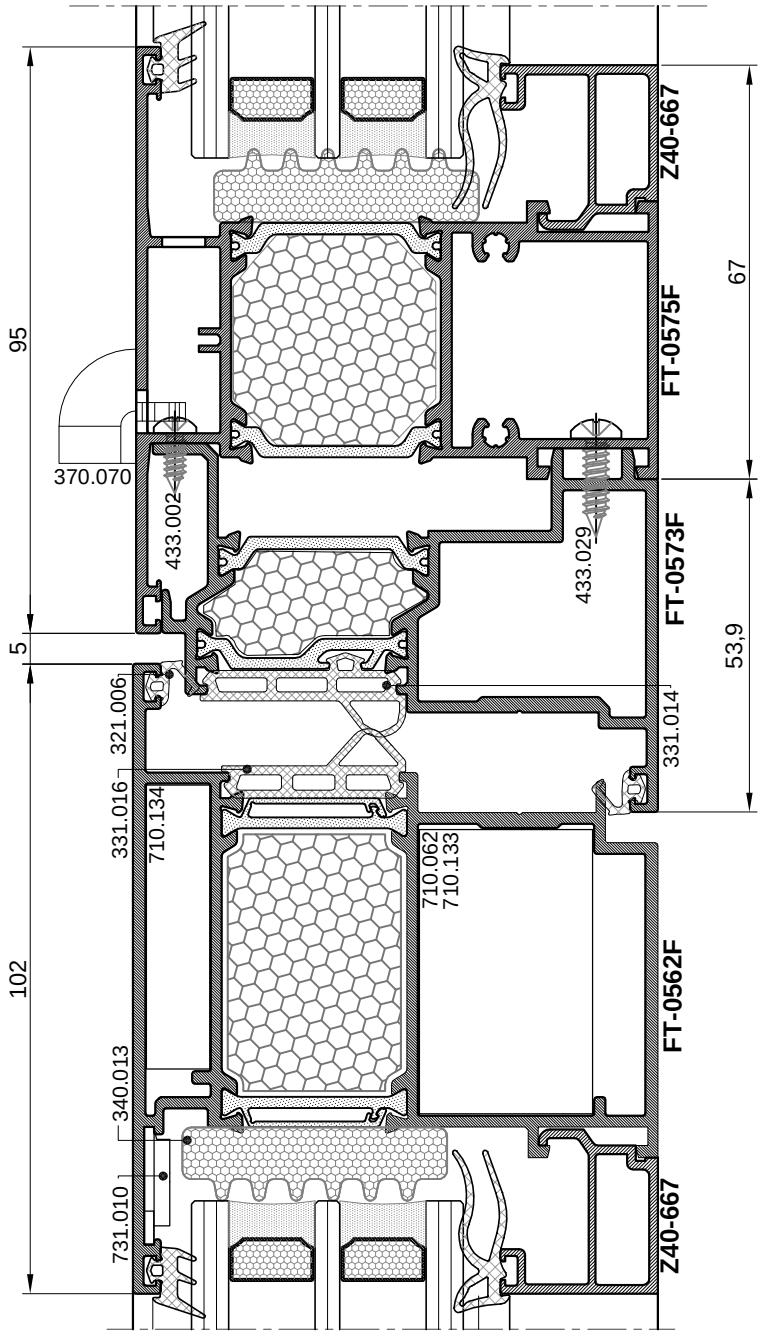

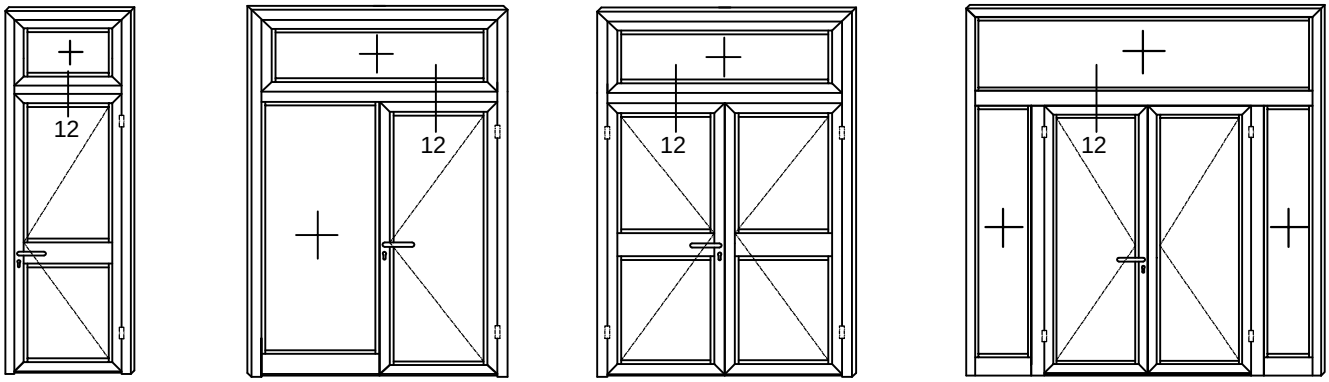

NAPOMENA: KRILO FT-0562F ZA BRAVU 35-icu
REMARK: SASH FT-0562F FOR LOCK -BACKSET 35

PRESJEK-12
CROSS SECTION-12

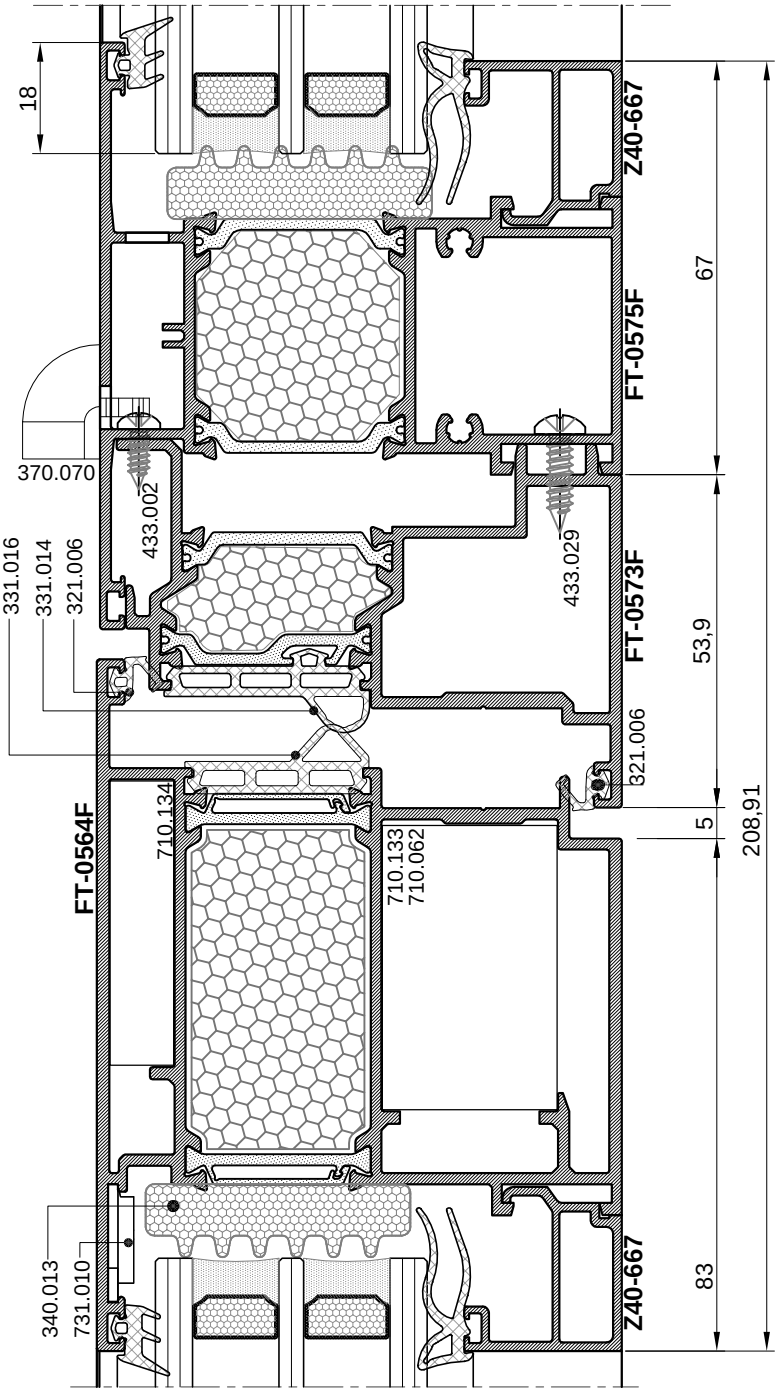

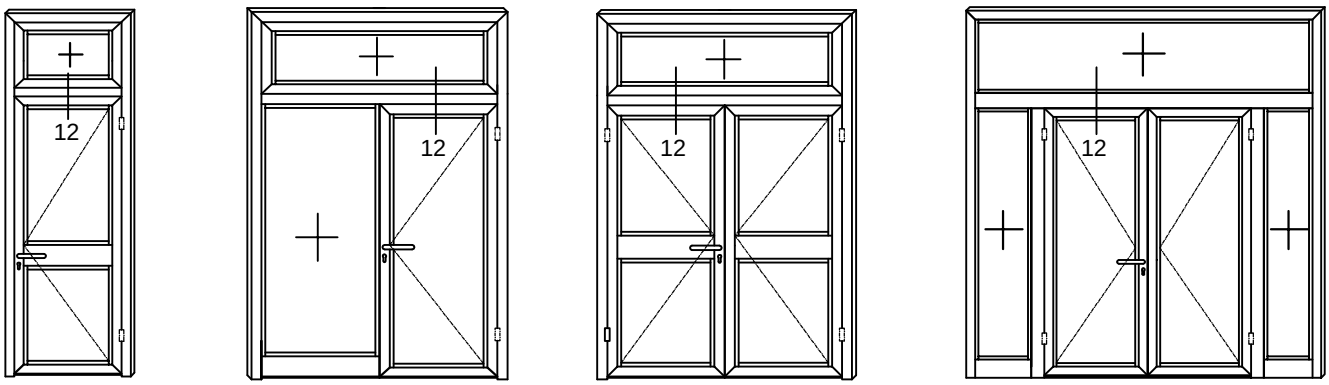

NAPOMENA: KRILO FT-0564F ZA BRAVU 45-icu
REMARK: SASH FT-0564F FOR LOCK - BACKSET 45

PRESJEK - 6A
CROSS SECTION - 6A

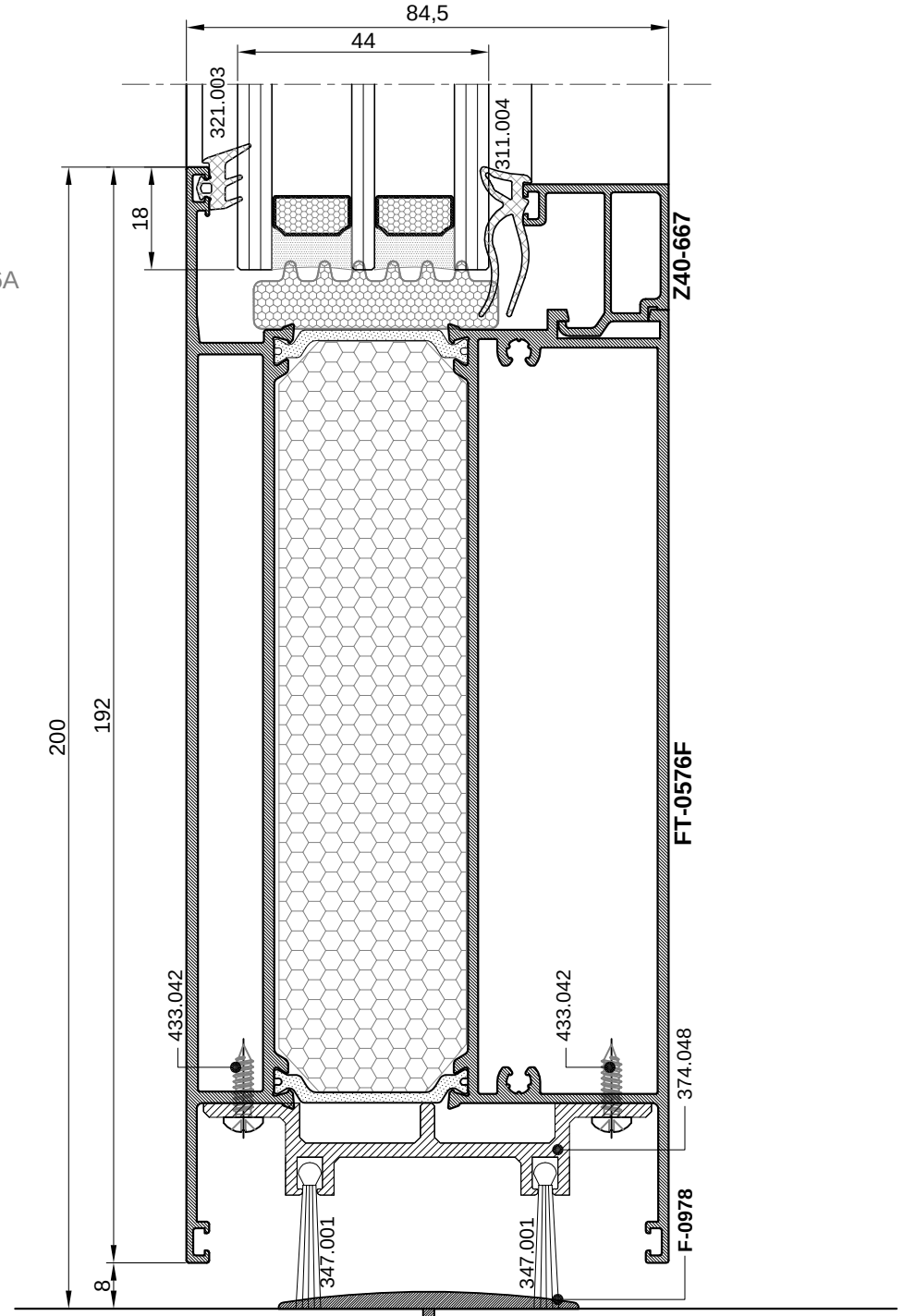

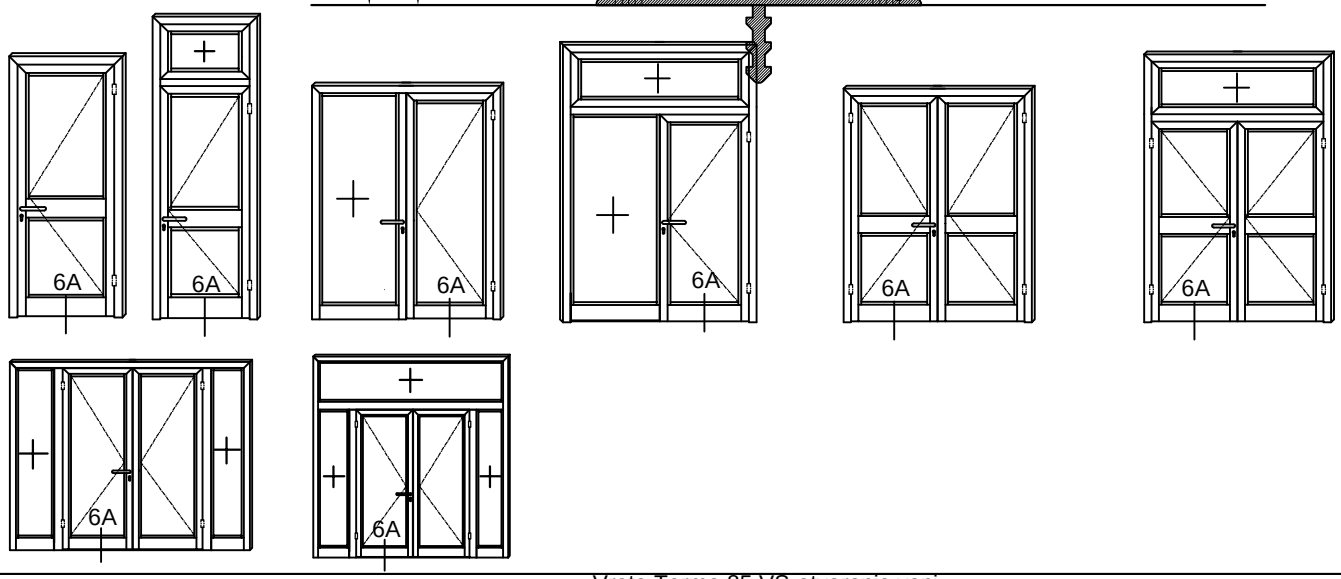

PRESJEK-14
CROSS SECTION-14

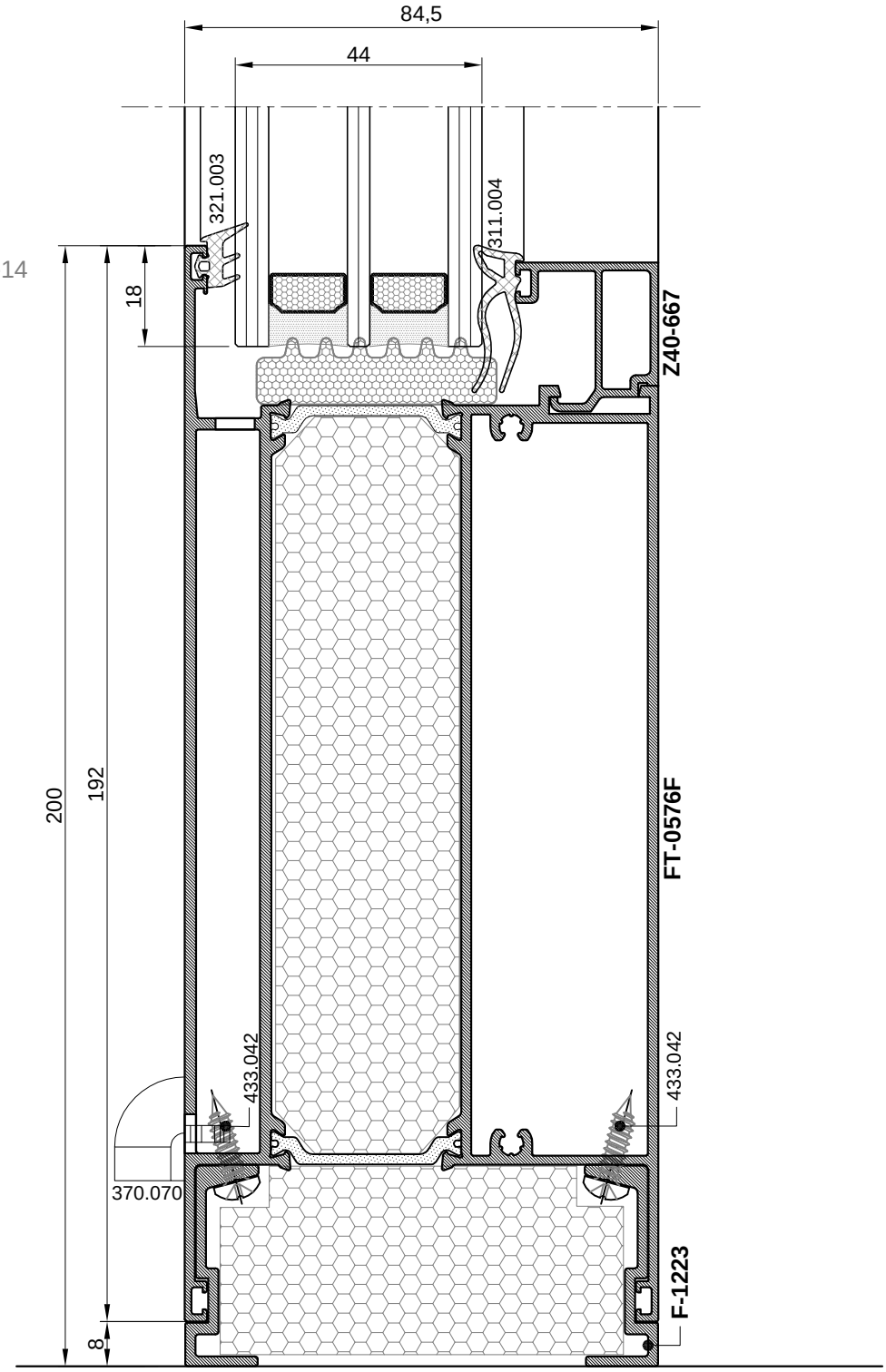

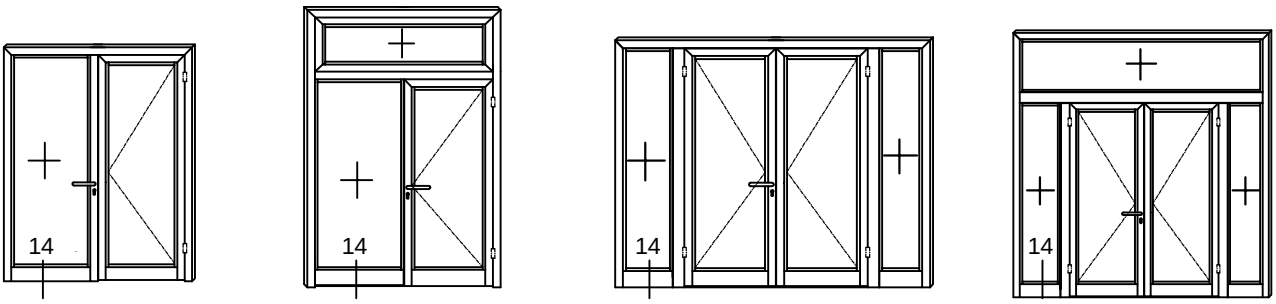

PRESJEK-13
CROSS SECTION-13

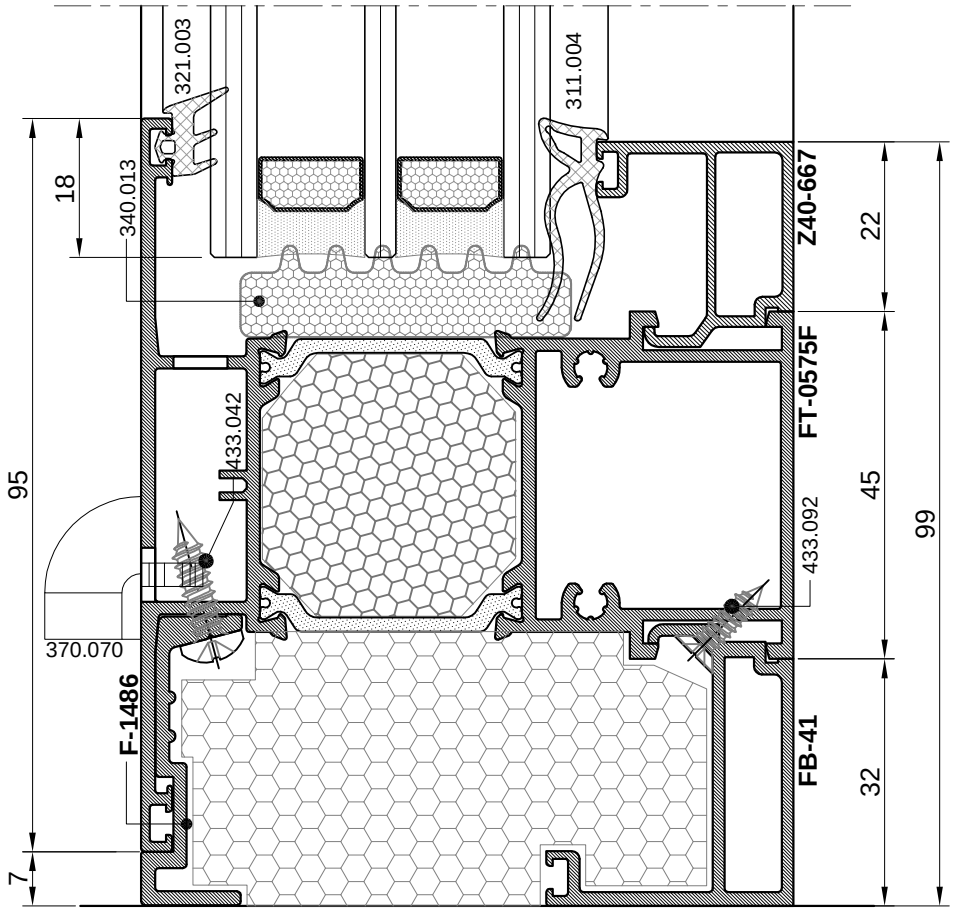

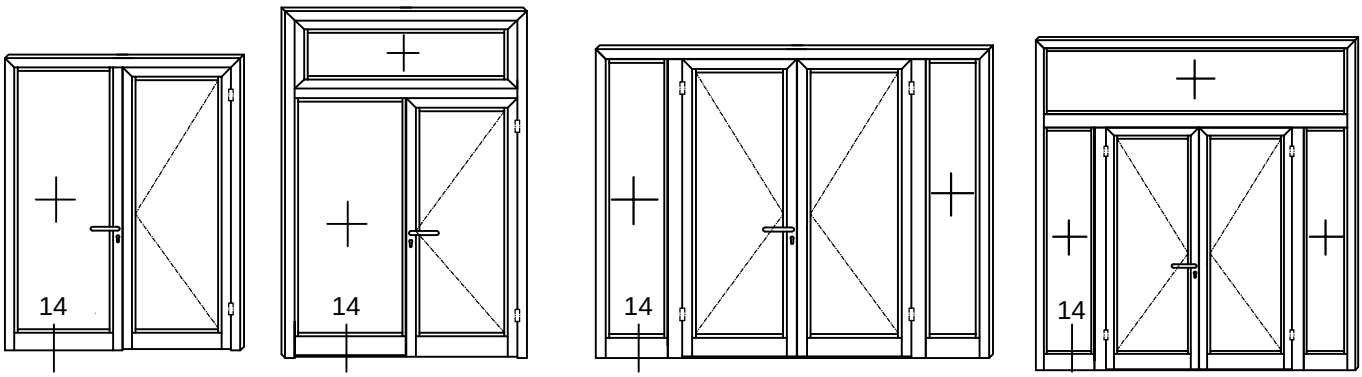

PRESJEK-13
CROSS SECTION-13

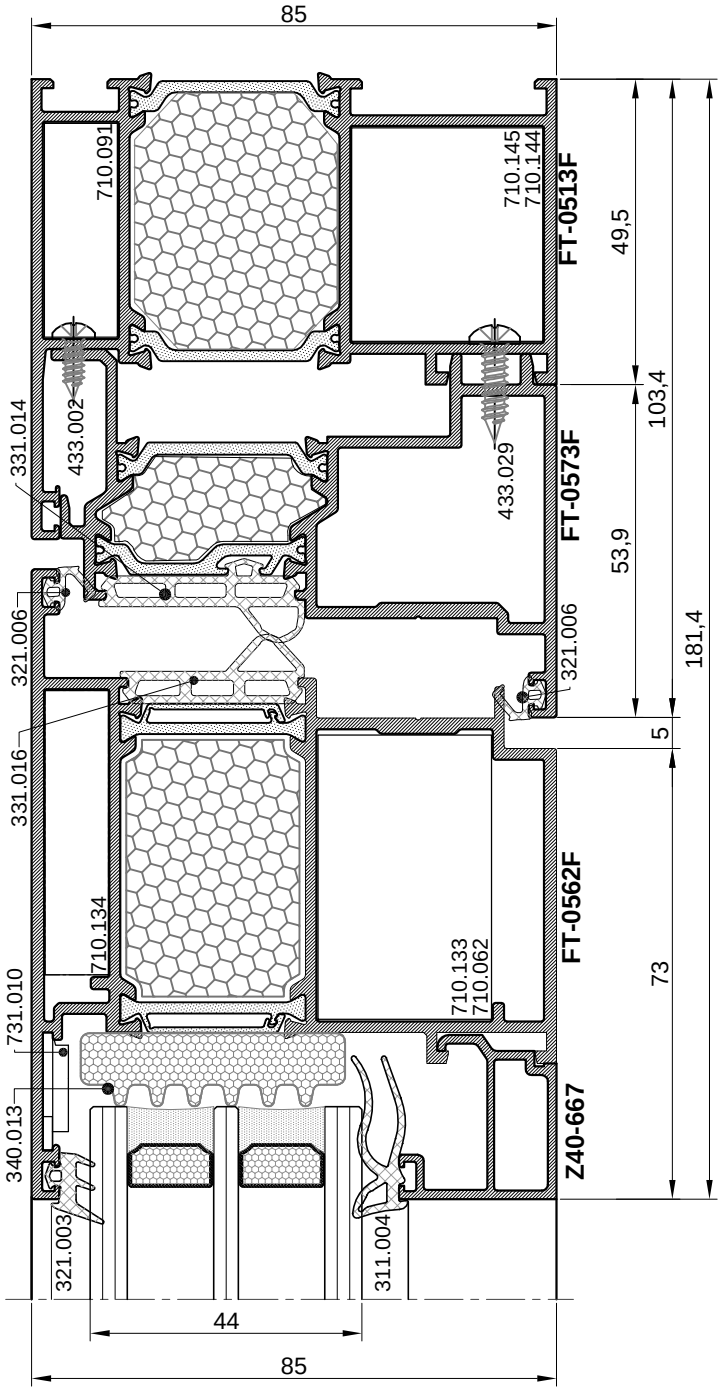

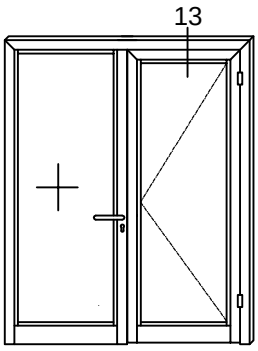

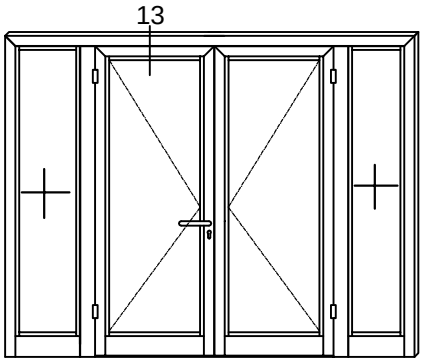

NAPOMENA: KRILO FT-0562F ZA BRAVU 35-icu
REMARK: SASH FT-0562F FOR LOCK -BACKSET 35

PRESJEK-13
CROSS SECTION-13

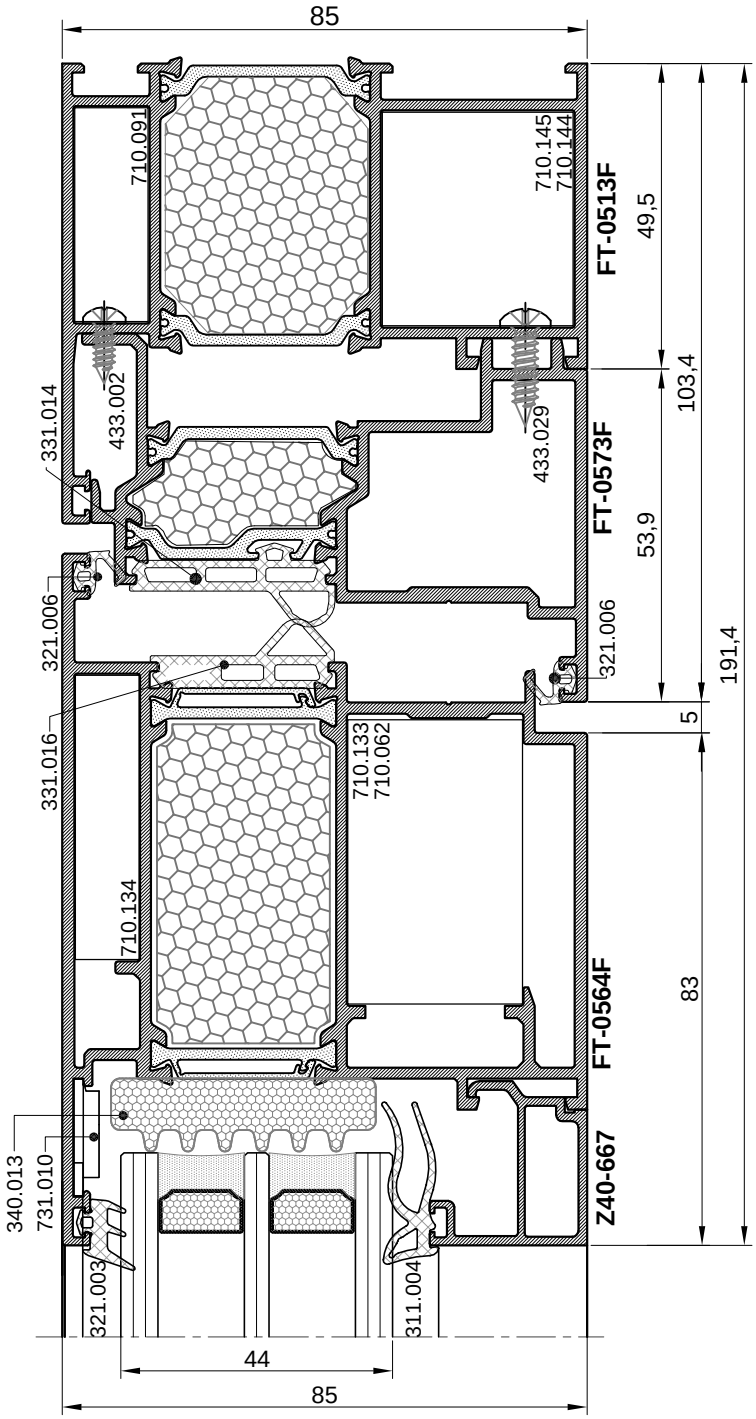

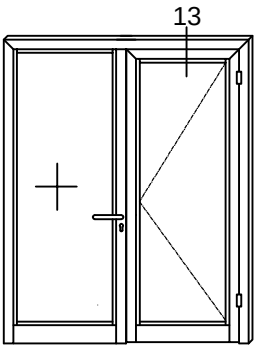

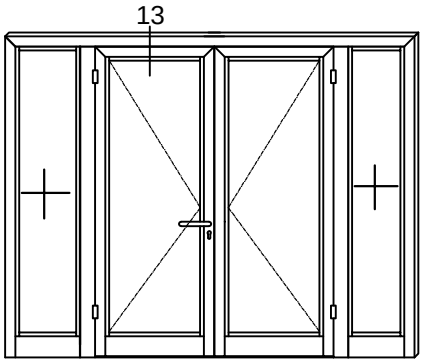

NAPOMENA: KRILO FT-0564F ZA BRAVU 45-icu
REMARK: SASH FT-0564F FOR LOCK - BACKSET 45

PRESJEK-17
CROSS SECTION-17

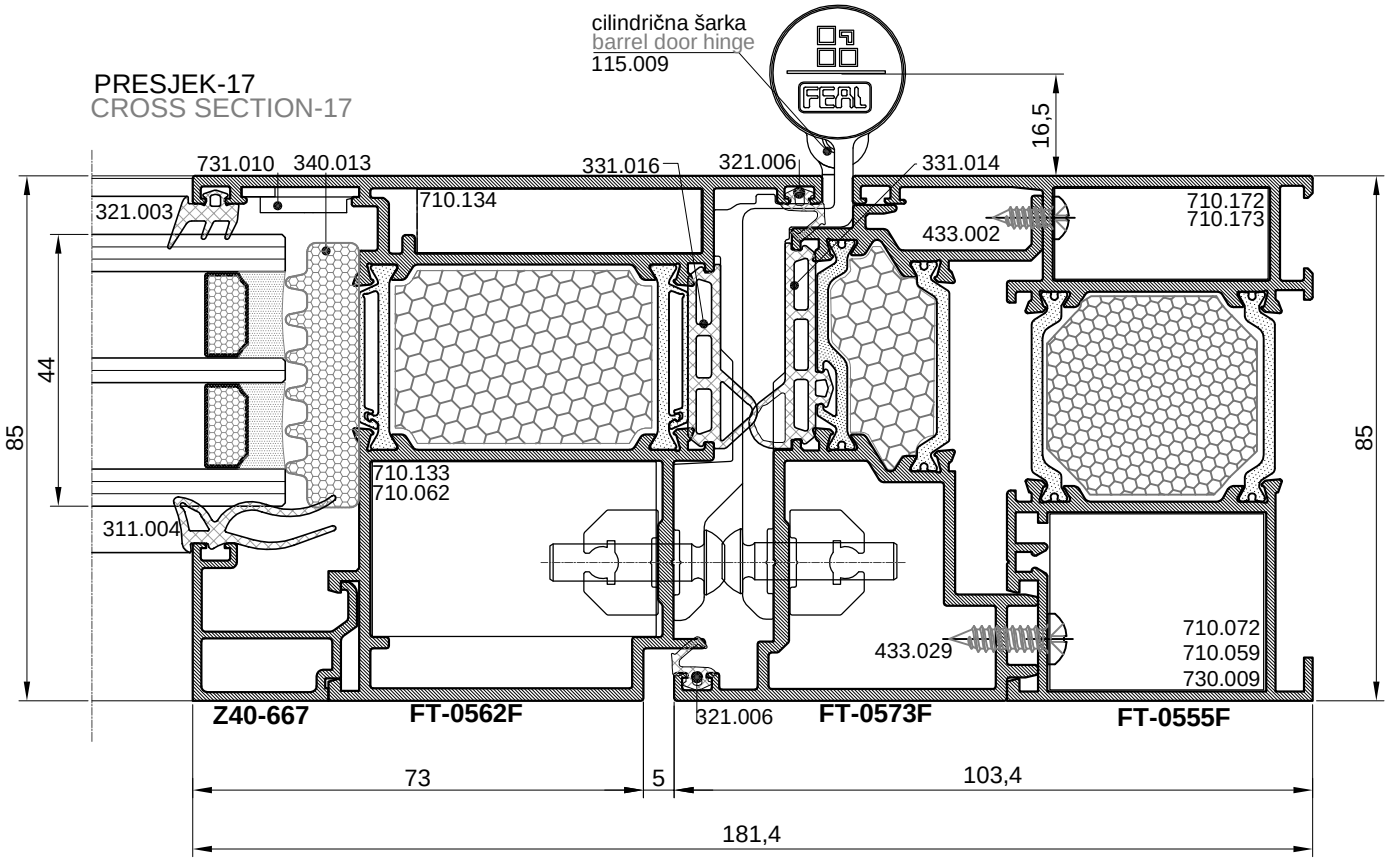

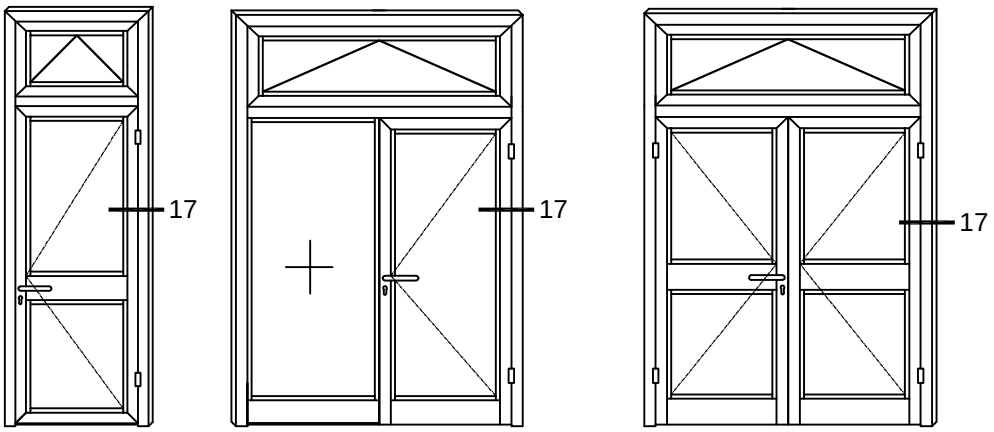

NAPOMENA: KRILO FT-0562F ZA BRAVU 35-icu
REMARK: SASH FT-0562F FOR LOCK BACKSET 35

PRESJEK-17
CROSS SECTION-17

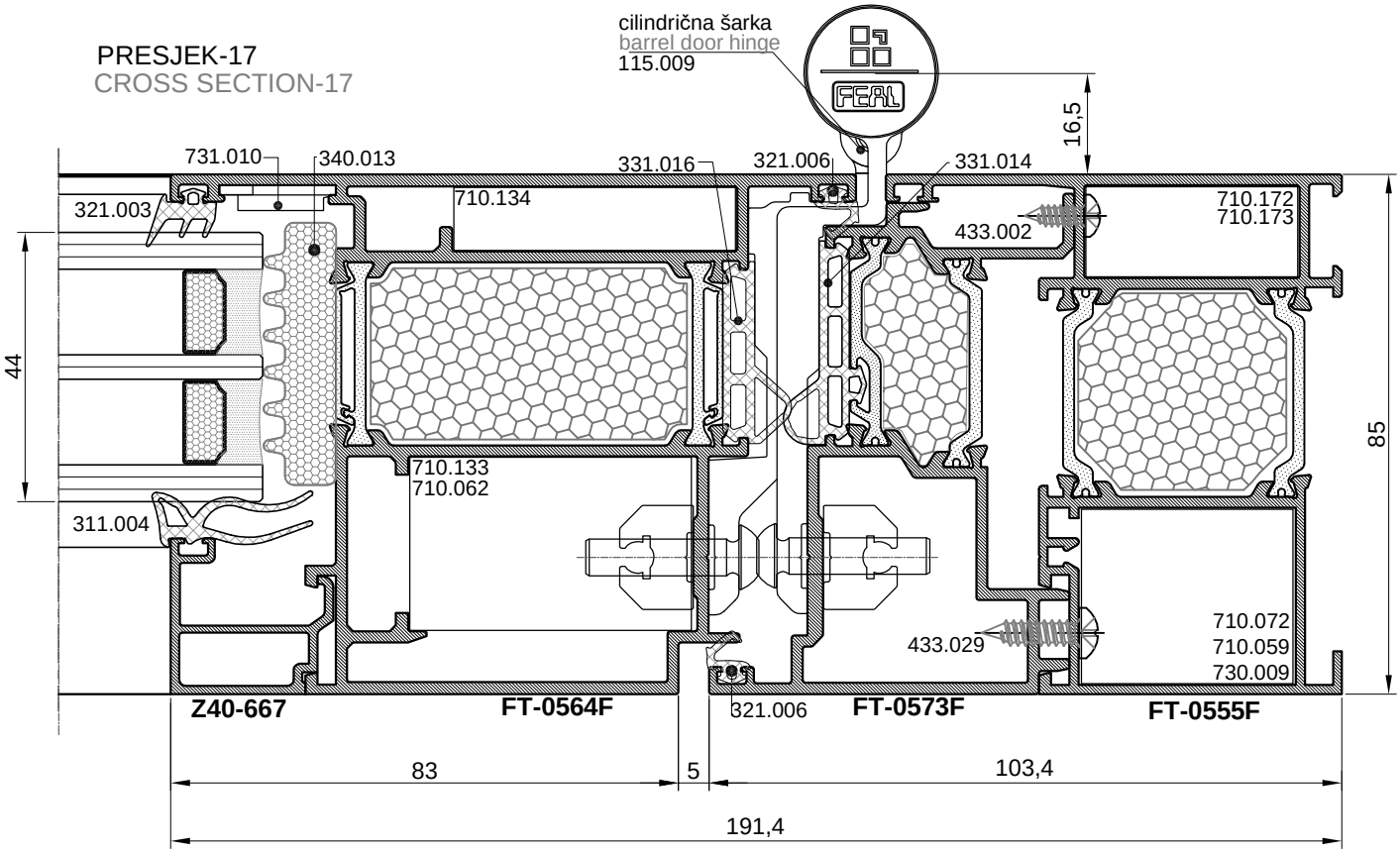

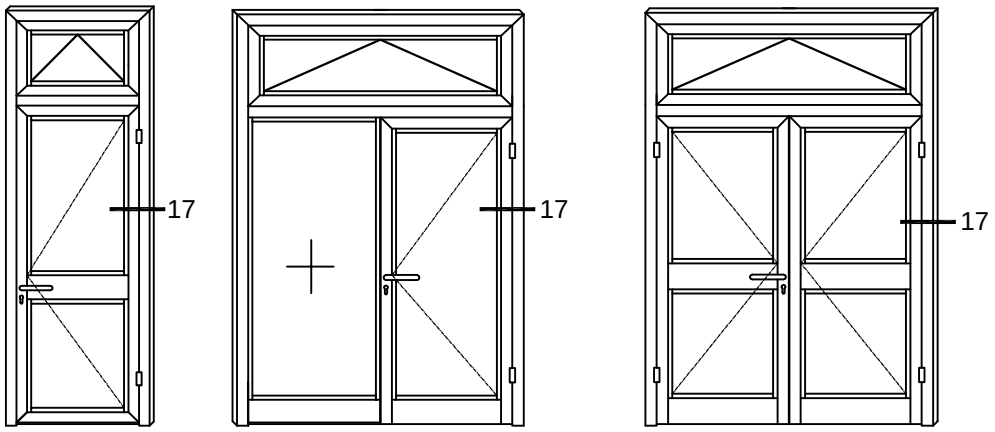

NAPOMENA: KRILO FT-0564F ZA BRAVU 45-icu
REMARK: SASH FT-0564F FOR LOCK BACKSET 45

PRESJEK-16
CROSS SECTION-16

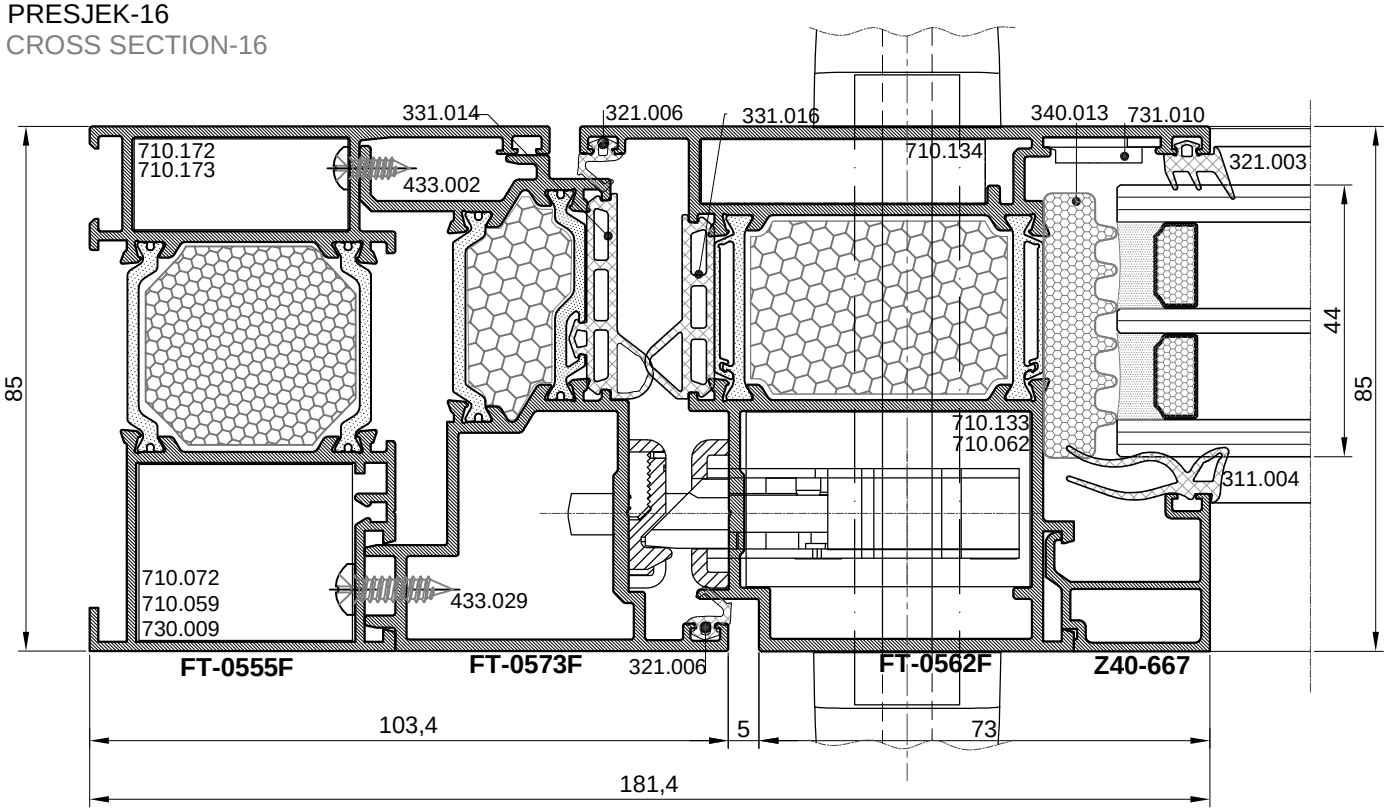

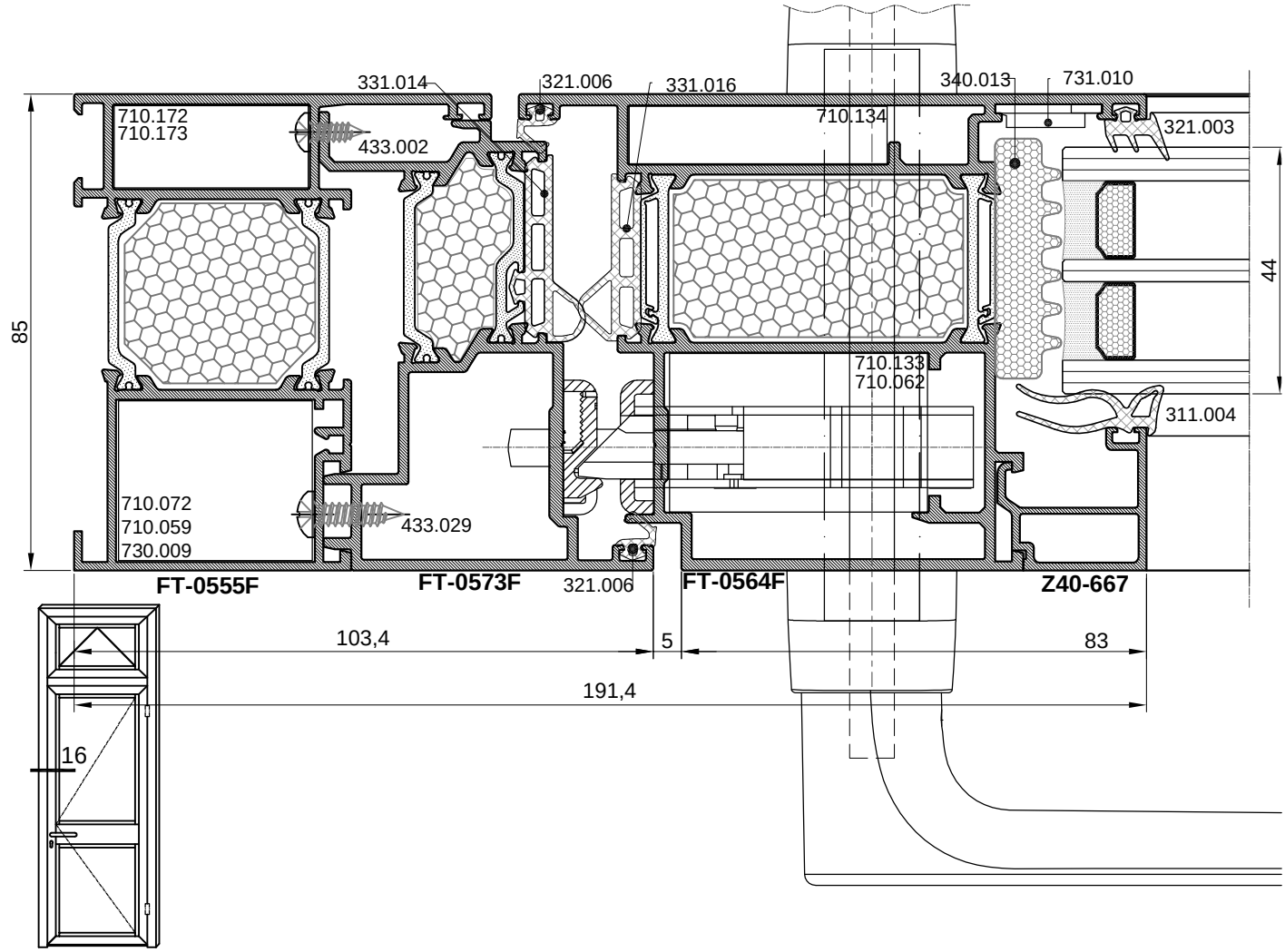

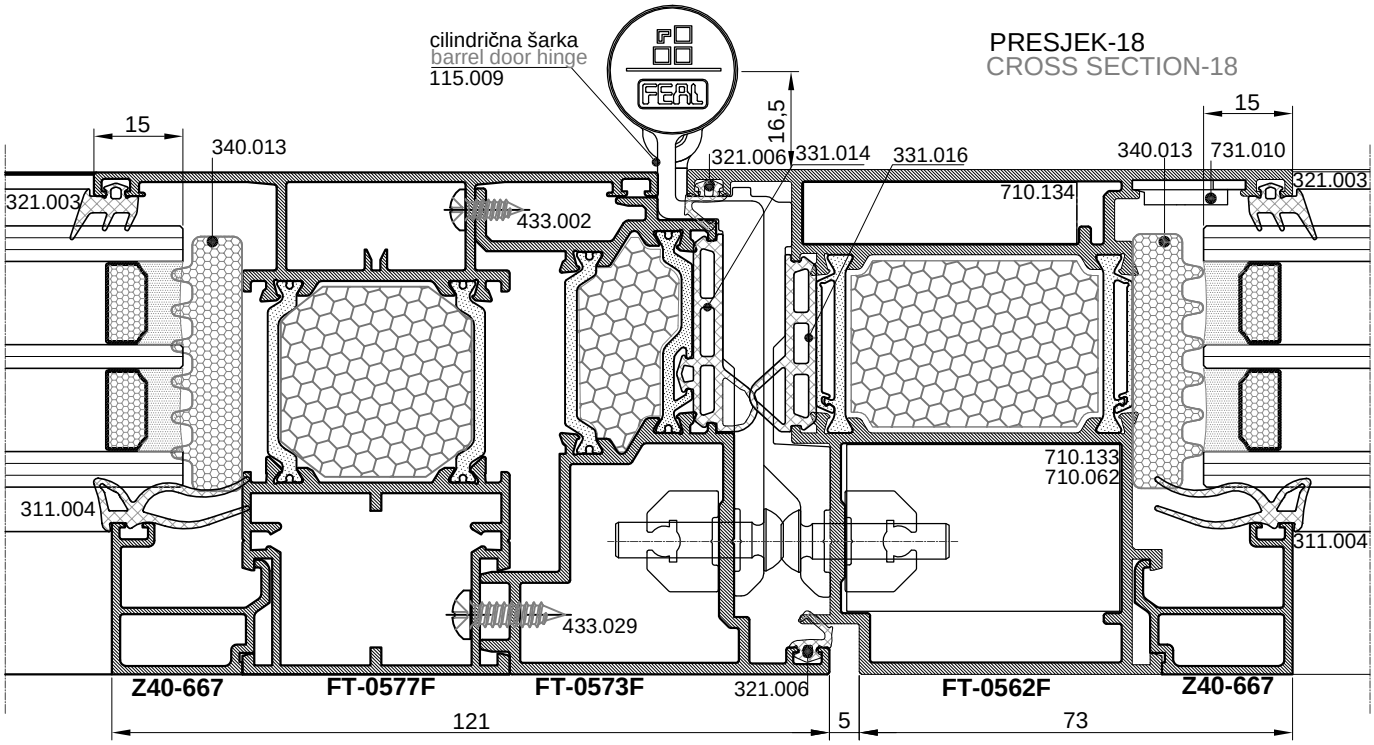
cilindrična šarka
barrel door hinge
115.009
PRESJEK-18
CROSS SECTION-18
15
340.013
321.003
433.002
16,5
321.006
331.014
331.016
340.013
731.010
15
321.003
710.134
710.133
710.062
311.004
311.004
433.029
Z40-667
FT-0577F
FT-0573F
321.006
FT-0562F
Z40-667
121
5
73

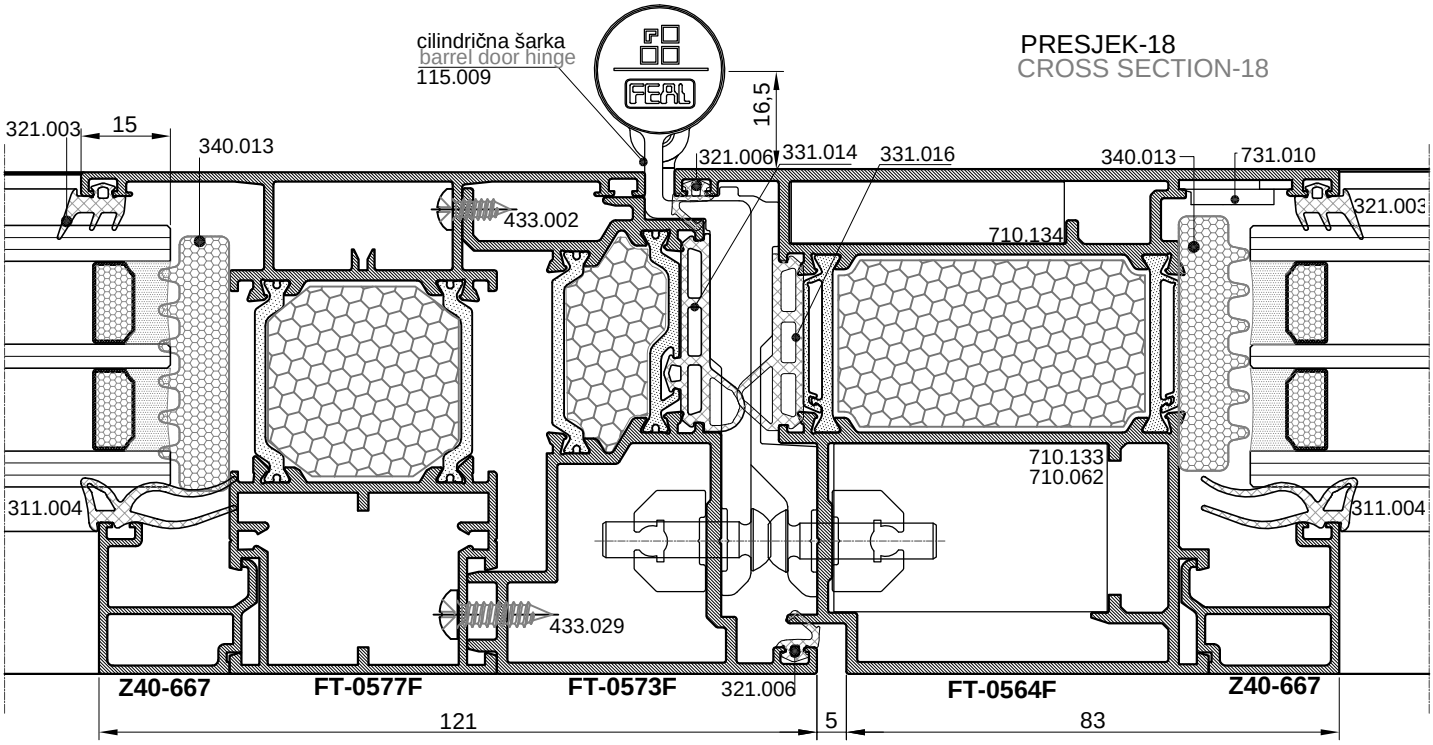
cilindrična šarka
barrel door hinge
115.009
PRESJEK-18
CROSS SECTION-18
321.003
15
340.013
16,5
321.006
331.014
331.016
340.013
731.010
321.003
433.002
710.134
710.133
710.062
311.004
311.004
433.029
Z40-667
FT-0577F
FT-0573F
321.006
FT-0564F
Z40-667
121
5
83

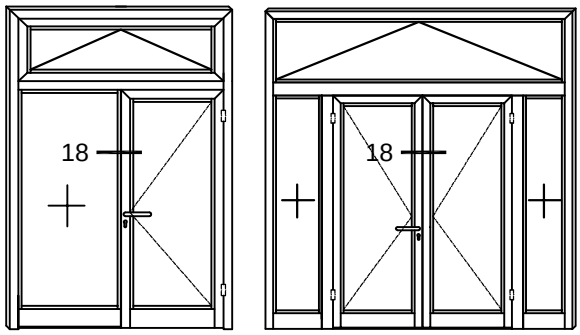
18
18

PRESJEK-19
CROSS SECTION-19

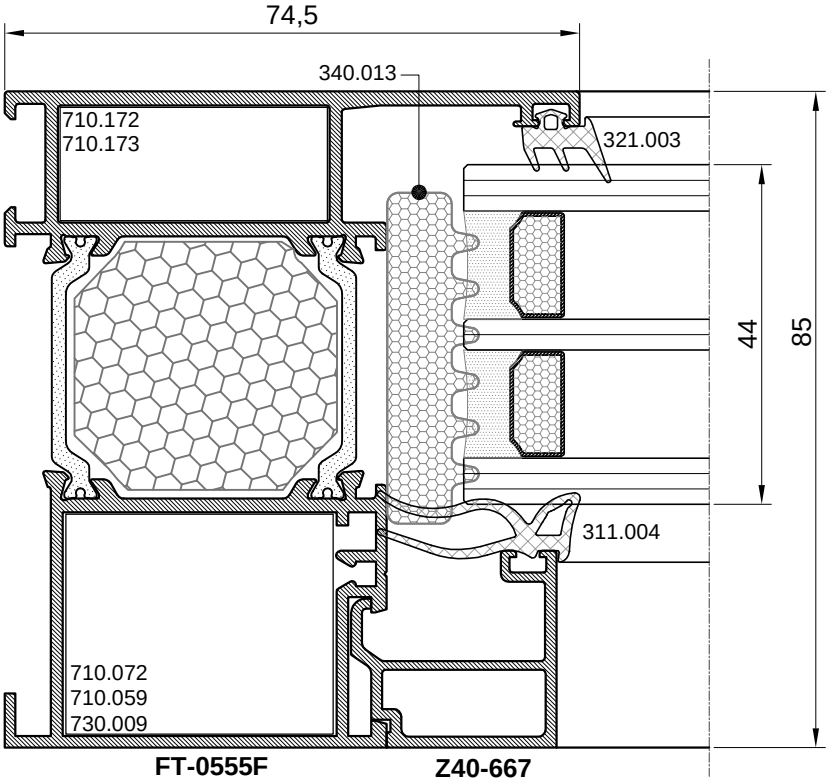

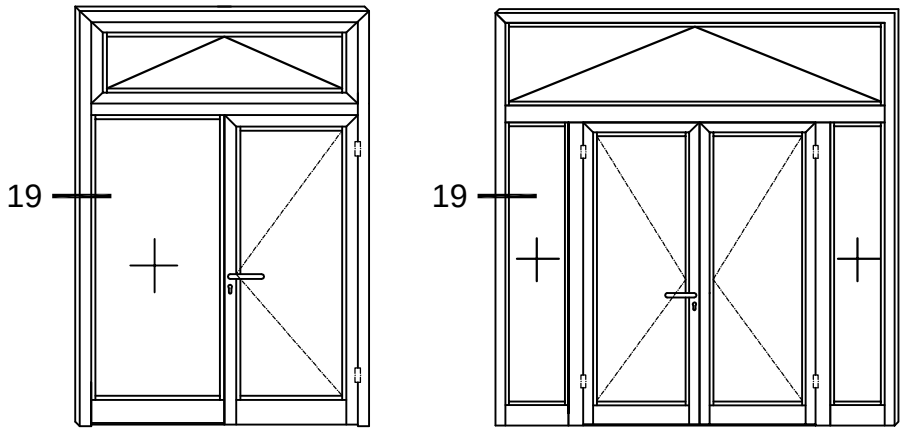

PRESJEK-15
CROSS SECTION-15

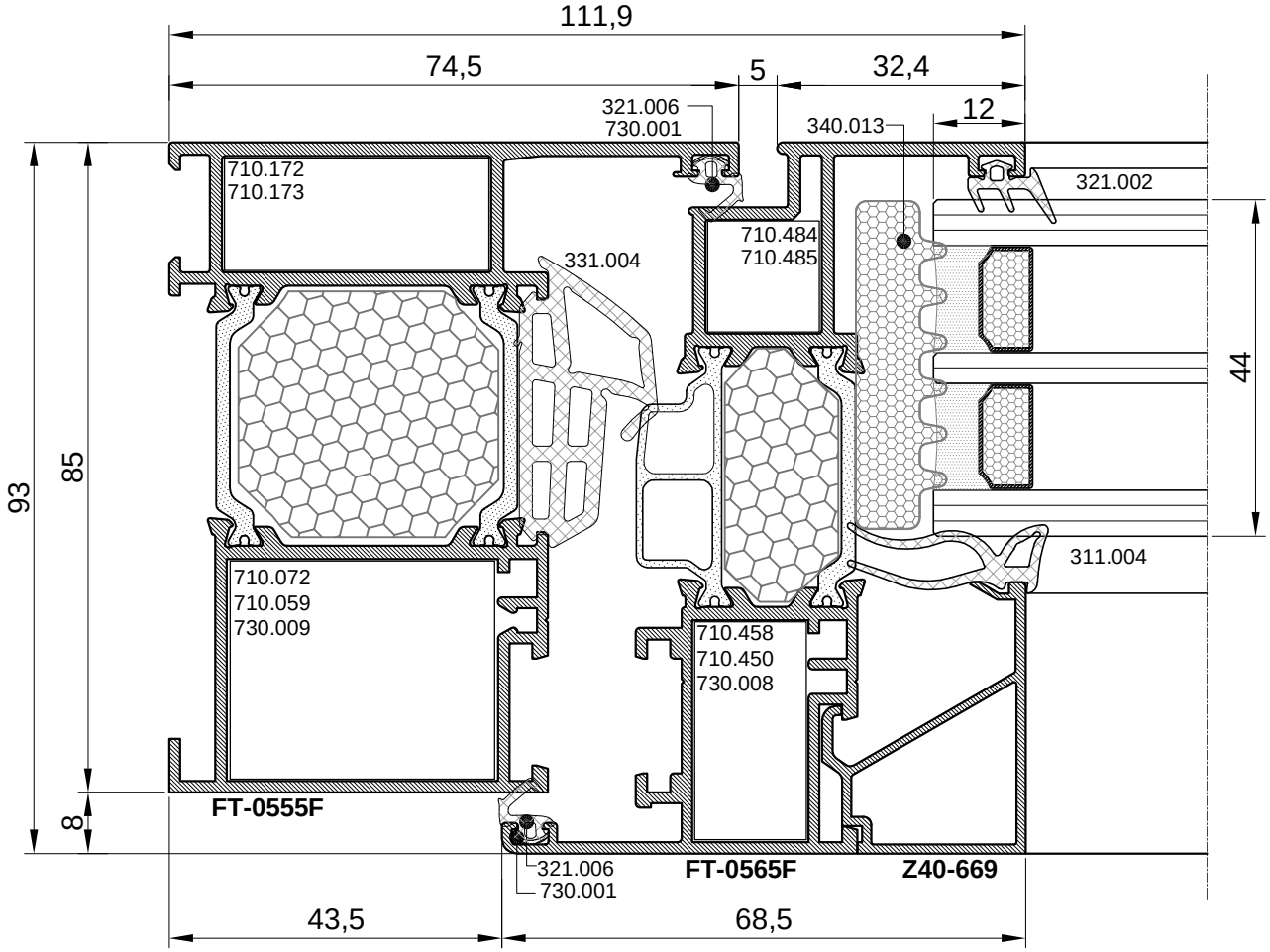

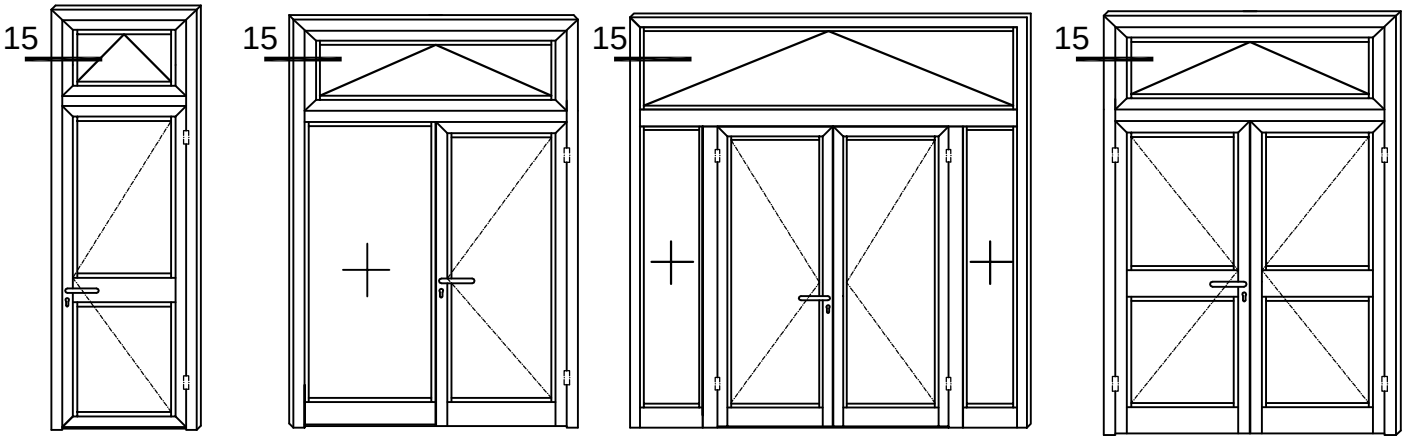

PRESJEK-20
CROSS SECTION-20

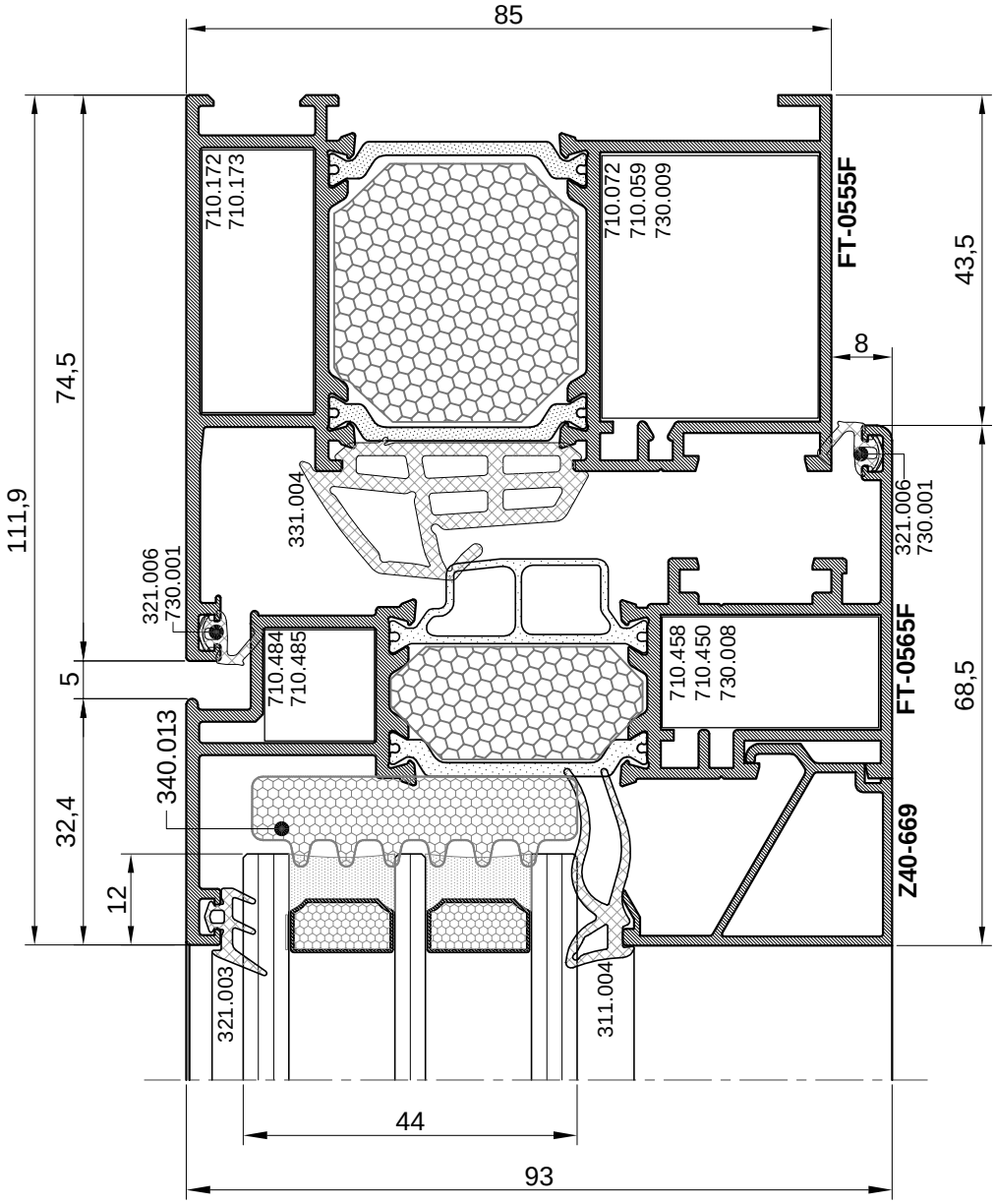

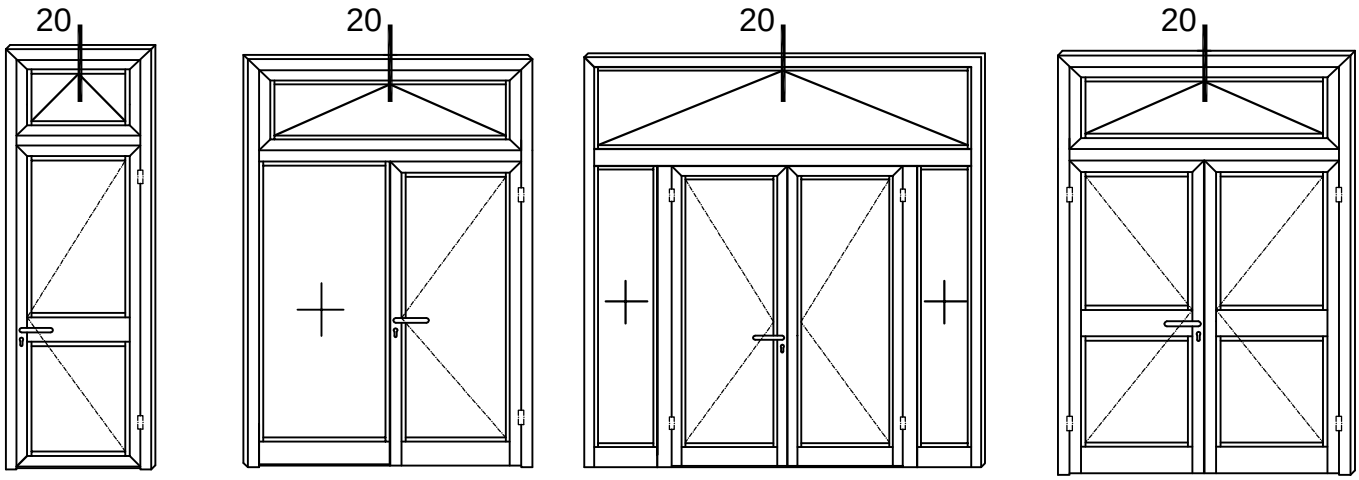

PRESJEK-21
CROSS SECTION-21

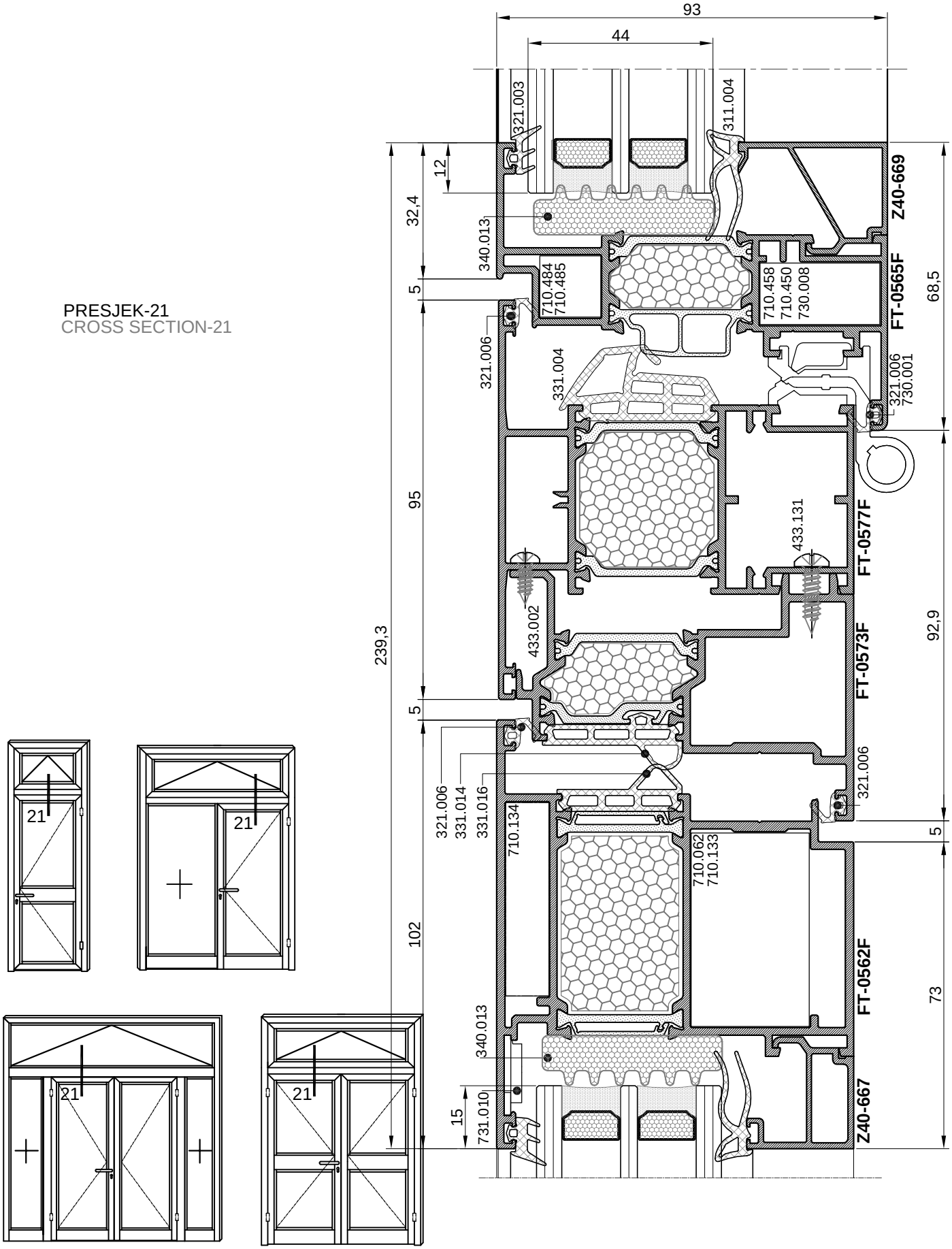

NAPOMENA: KRILO FT-0562F ZA BRAVU 35-icu
REMARK: SASH FT-0562F FOR LOCK -BACKSET 35

PRESJEK-21
CROSS SECTION-21

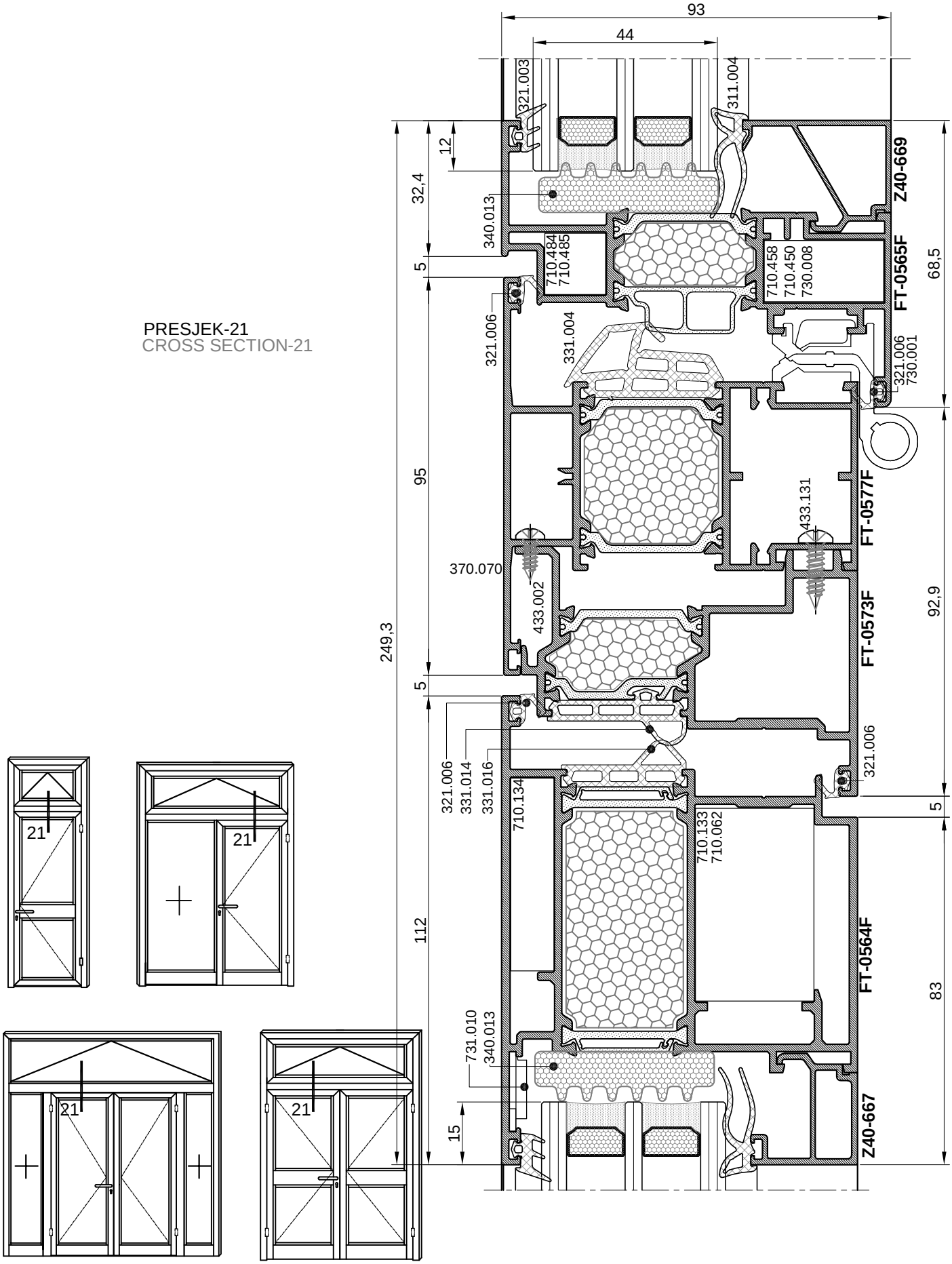

NAPOMENA: KRILO FT-0564 F ZA BRAVU 45-icu
REMARK: SASH FT-0564 F FOR LOCK -BACKSET 45

PRESJEK-22
CROSS SECTION-22

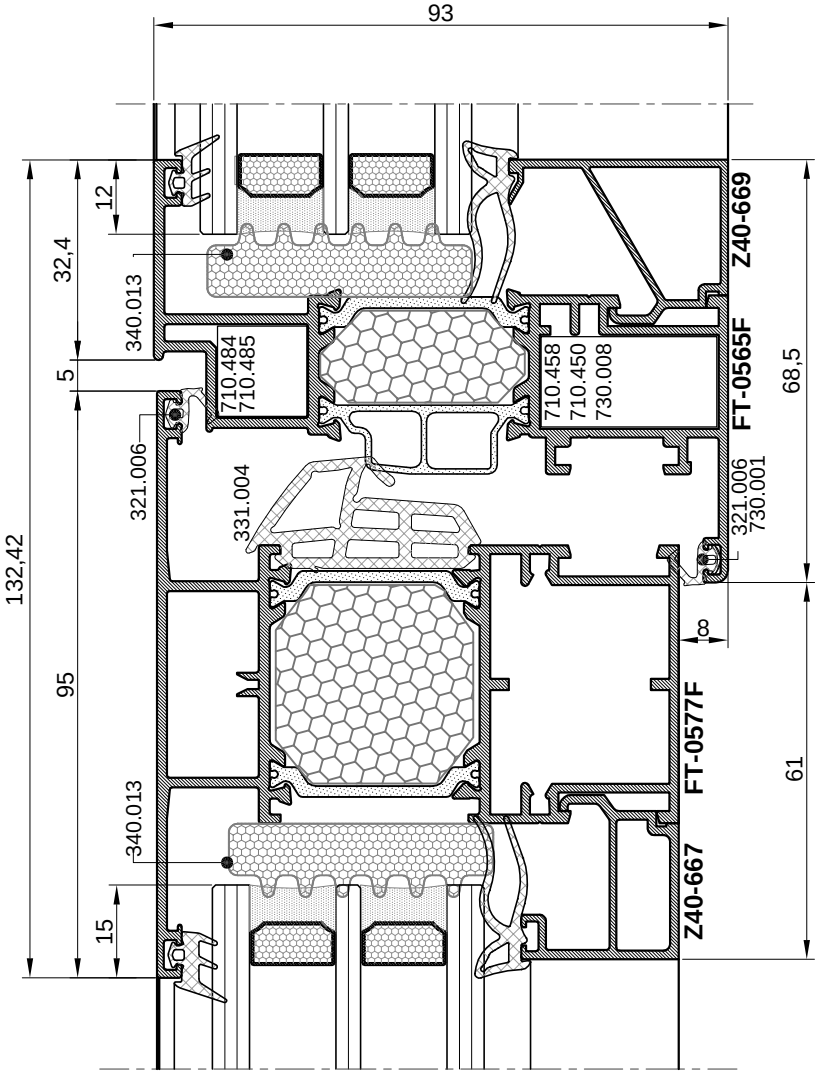

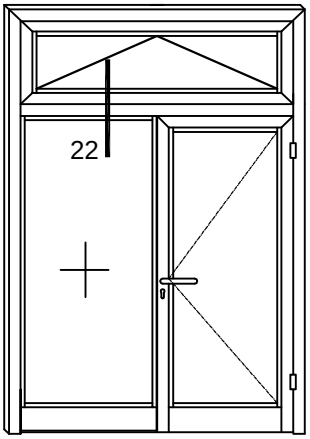

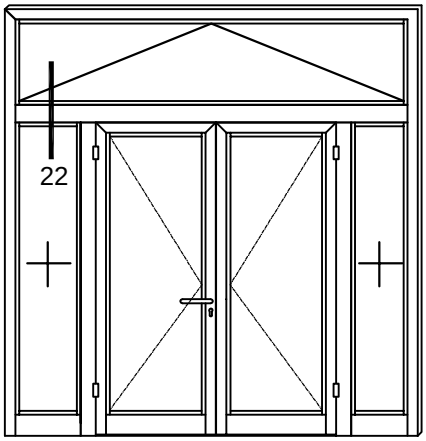

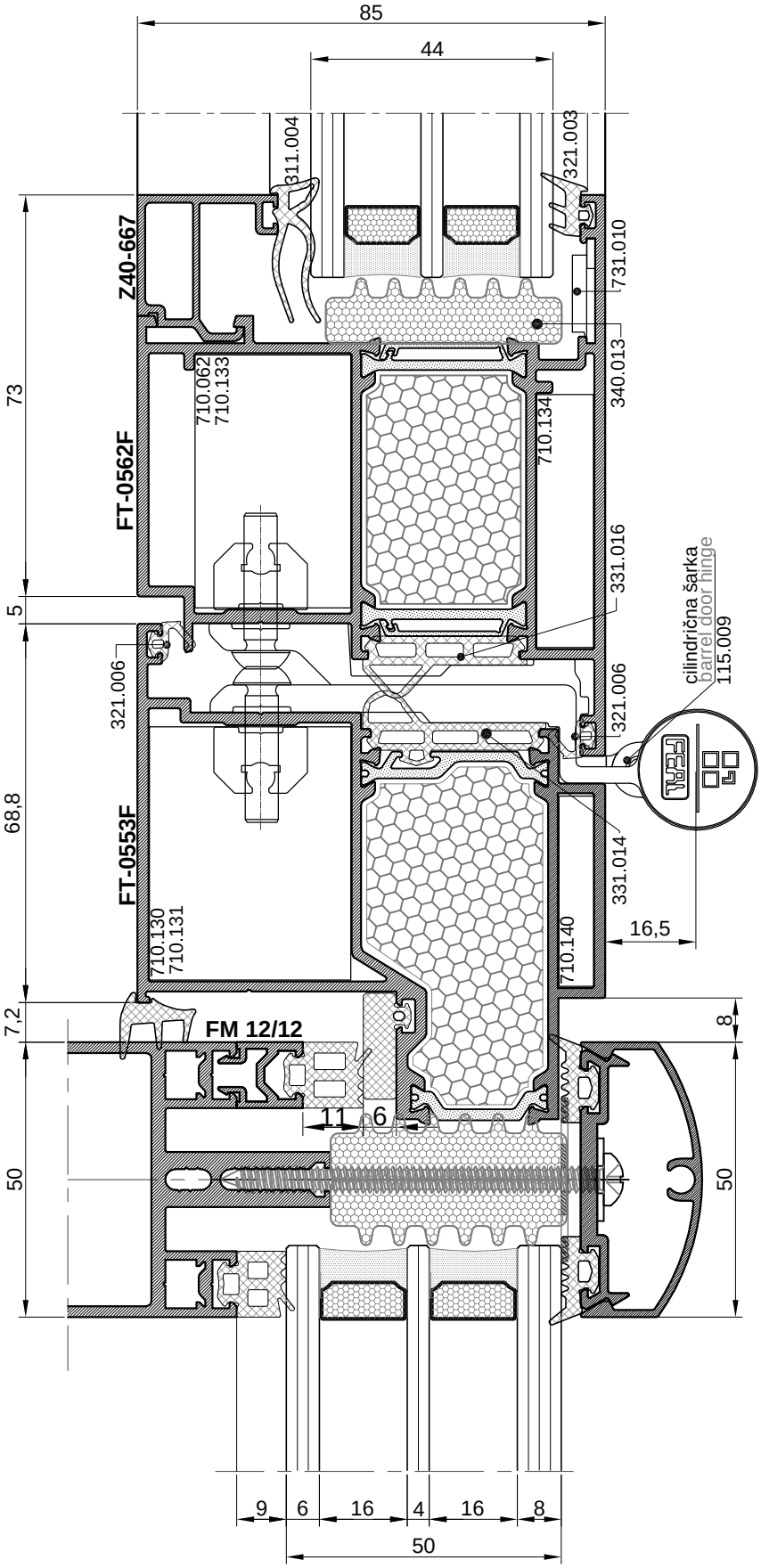

FASADA 50 FK
FACADE 50 FK

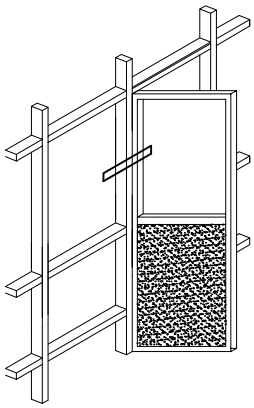

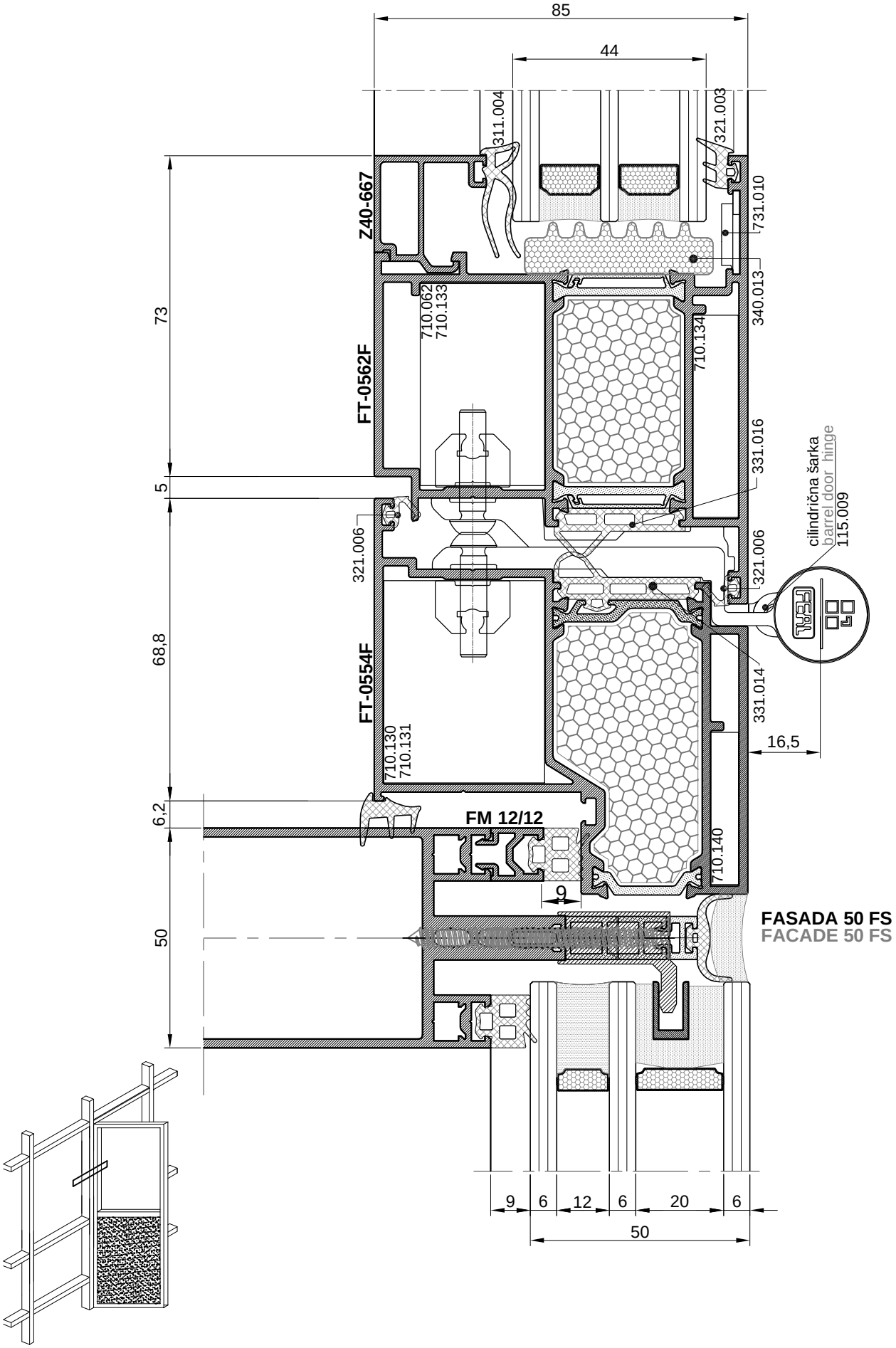
85
44
311.004
321.003
Z40-667
731.010
340.013
710.062
710.133
710.134
FT-0562F
73
331.016
5
321.006
321.006
cilindrična šarka
barrel door hinge
115.009
68,8
FT-0554F
331.014
16,5
710.130
710.131
6,2
FM 12/12
710.140
9
50
FASADA 50 FS
FACADE 50 FS
9
6
12
6
20
6
50

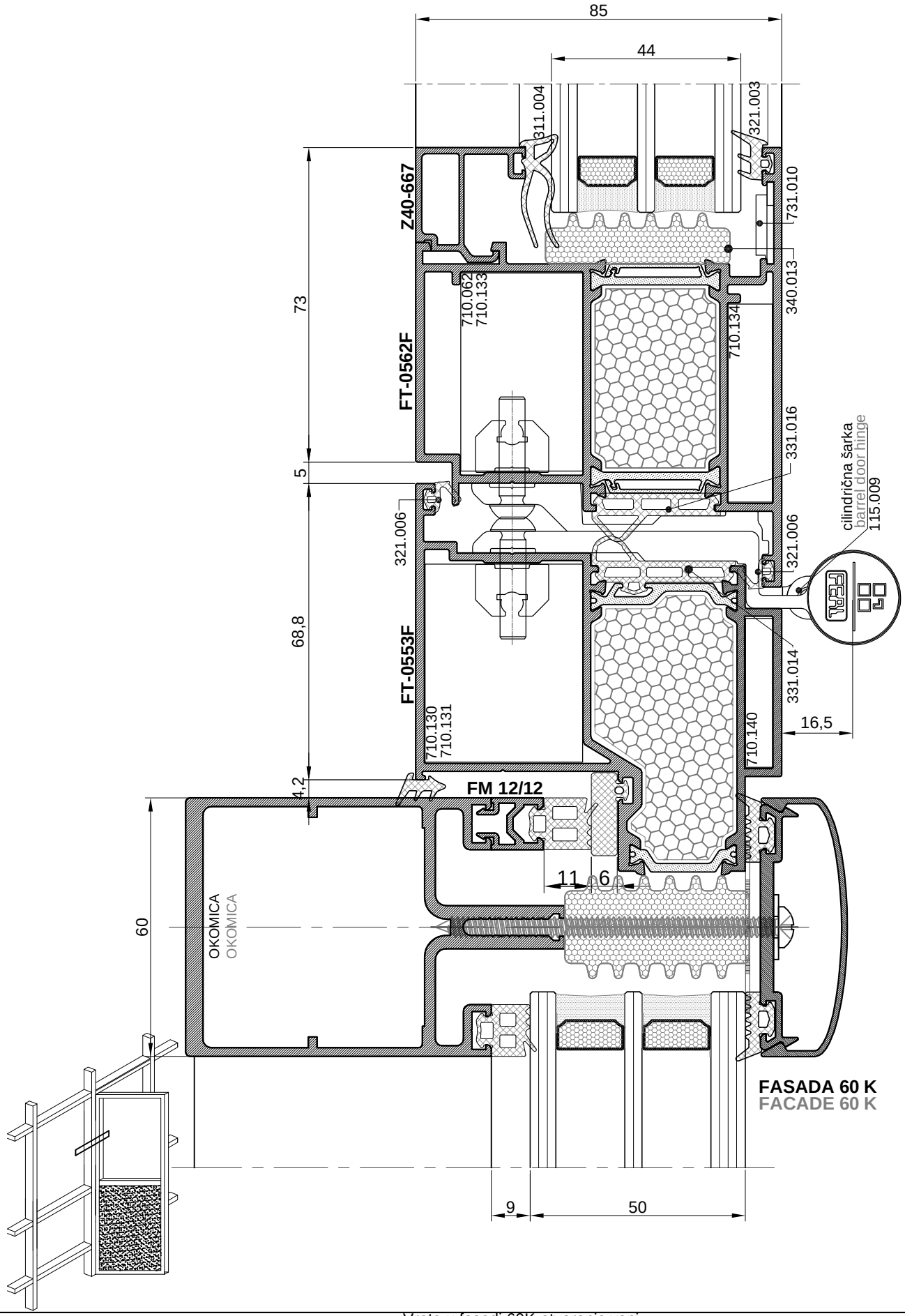
85
44
311.004
321.003
Z40-667
731.010
340.013
710.062
710.133
710.134
73
FT-0562F
331.016
5
321.006
321.006
cilindrična šarka
barrel door hinge
115.009
68,8
FT-0553F
331.014
710.130
710.131
710.140
16,5
4,2
FM 12/12
11
6
60
OKOMICA
OKOMICA
FASADA 60 K
FACADE 60 K
9
50

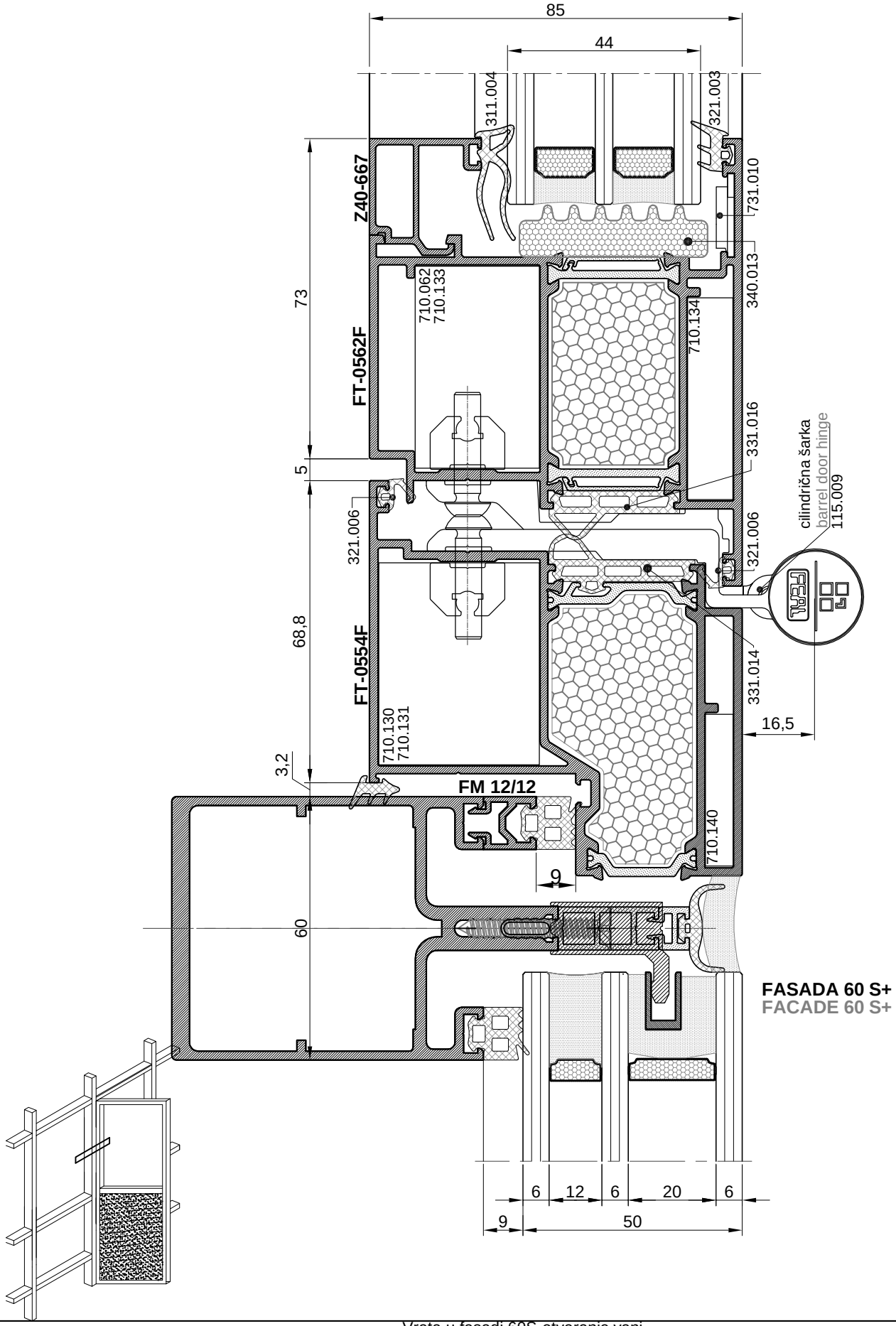
85
44
311.004
321.003
731.010
340.013
Z40-667
73
710.062
710.133
710.134
FT-0562F
331.016
5
321.006
321.006
cilindrična šarka
barrel door hinge
115.009
68,8
FT-0554F
331.014
16,5
710.130
710.131
3,2
FM 12/12
710.140
9
60
FASADA 60 S+
FACADE 60 S+
6
12
6
20
6
9
50

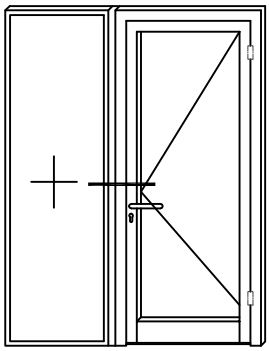

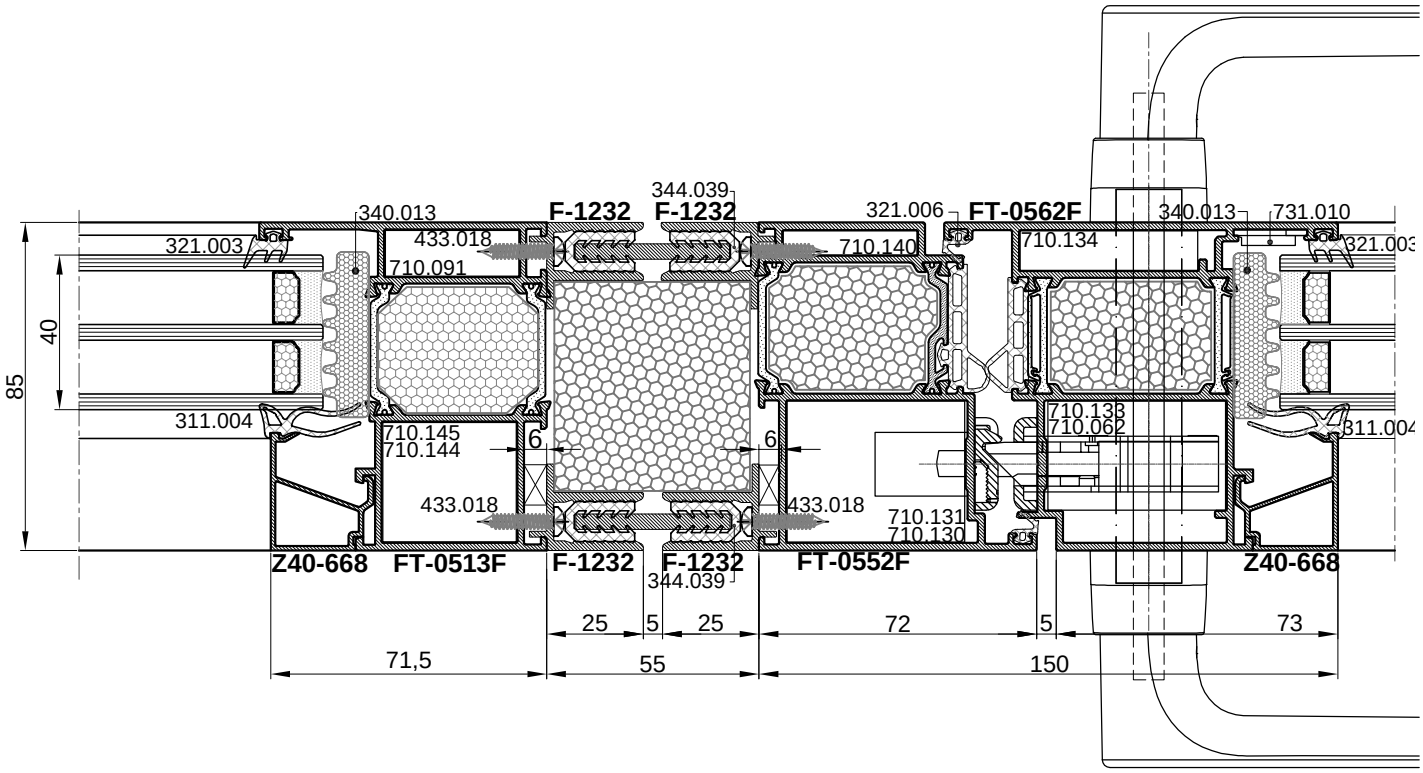
344.039
340.013
F-1232
F-1232
321.006
FT-0562F
340.013
731.010
321.003
433.018
710.140
710.134
321.003
710.091
85
40
311.004
710.145
710.144
6
6
710.133
710.062
311.004
433.018
433.018
710.131
710.130
Z40-668
FT-0513F
F-1232
F-1232
344.039
FT-0552F
Z40-668
25
5
25
72
5
73
71,5
55
150

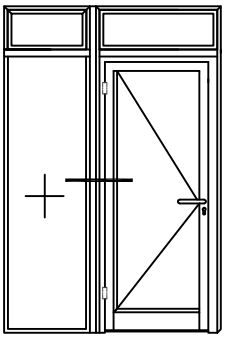

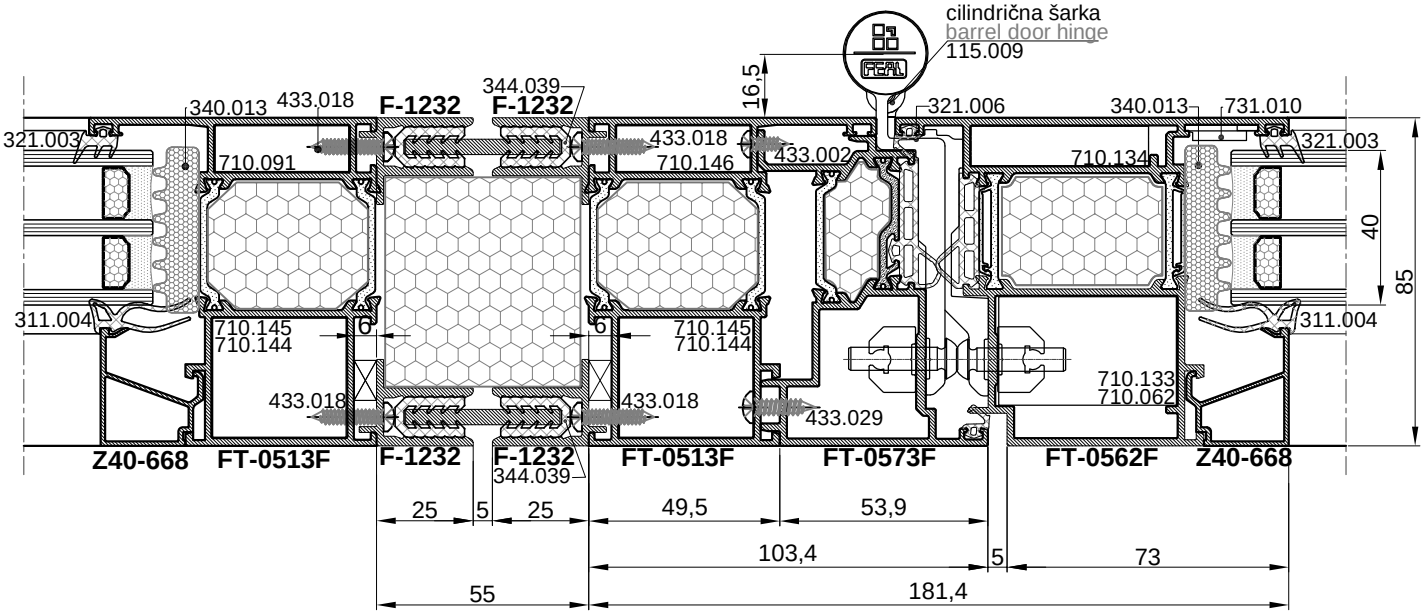
cilindrična šarka
barrel door hinge
115.009
16,5
344.039
340.013
433.018
F-1232
F-1232
321.006
340.013
731.010
321.003
710.091
433.018
710.146
433.002
710.134
321.003
40
85
311.004
710.145
710.144
6
6
710.145
710.144
311.004
710.133
710.062
433.018
433.018
433.029
Z40-668
FT-0513F
F-1232
F-1232
344.039
FT-0513F
FT-0573F
FT-0562F
Z40-668
25
5
25
49,5
53,9
103,4
5
73
55
181,4

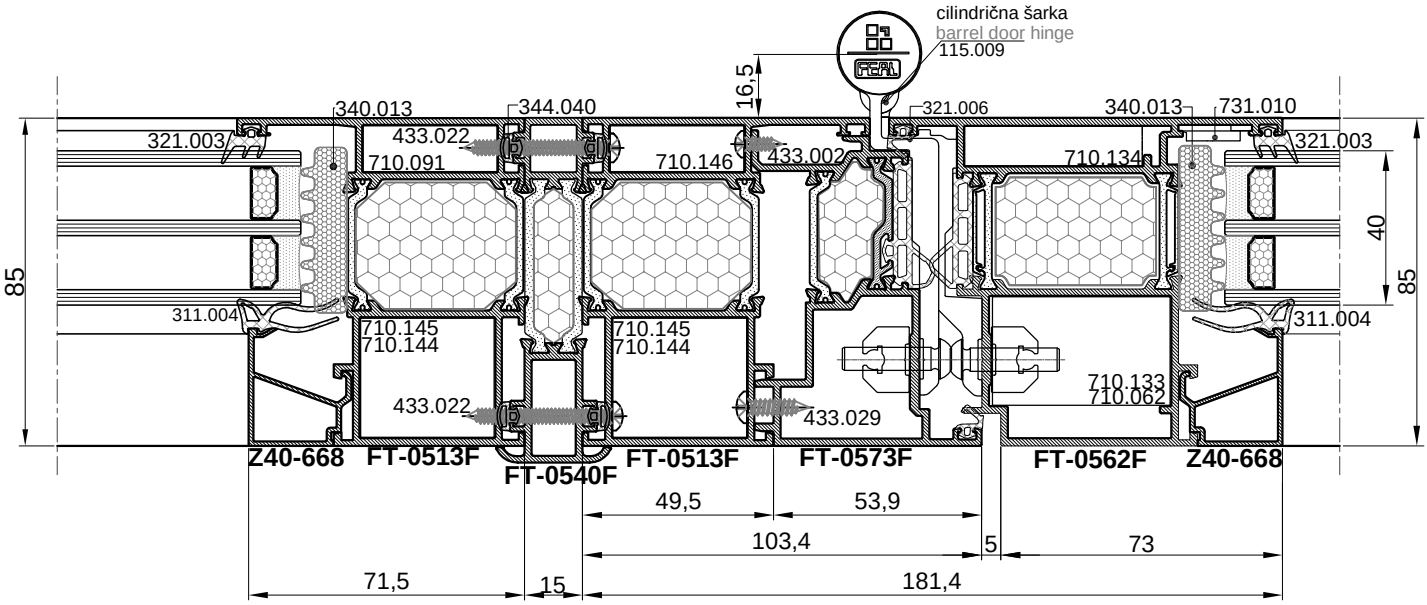
cilindrična šarka
barrel door hinge
115.009
16,5
340.013
344.040
321.006
340.013
731.010
321.003
433.022
710.091
710.146
433.002
710.134
321.003
40
85
85
311.004
710.145
710.144
710.145
710.144
311.004
710.133
710.062
433.022
433.029
Z40-668
FT-0513F
FT-0540F
FT-0513F
FT-0573F
FT-0562F
Z40-668
49,5
53,9
103,4
5
73
71,5
15
181,4

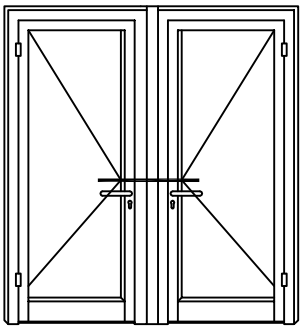

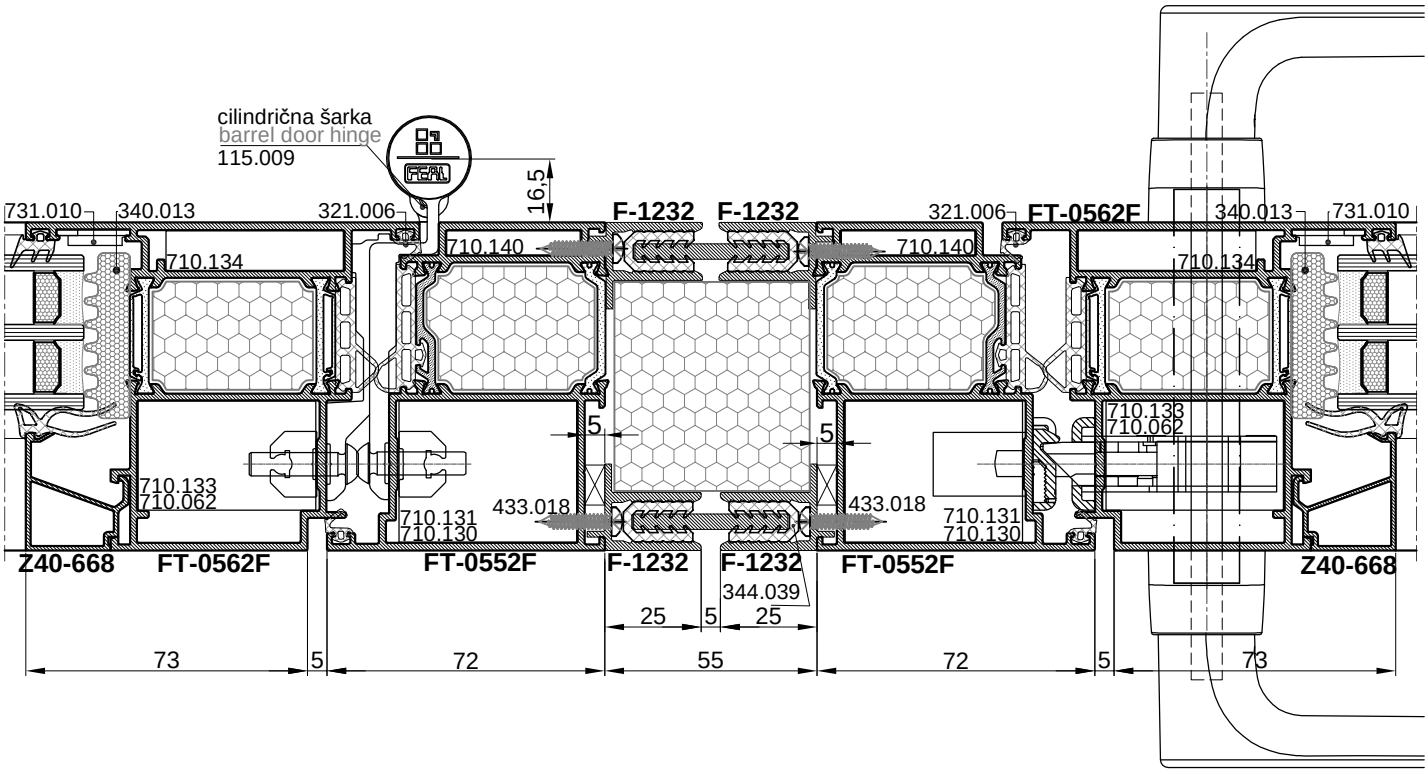
cilindrična šarka
barrel door hinge
115.009
16,5
731.010
340.013
321.006
710.134
710.140
F-1232
F-1232
321.006
FT-0562F
340.013
731.010
710.140
710.134
5
5
710.133
710.062
710.133
710.062
433.018
433.018
710.131
710.130
710.131
710.130
Z40-668
FT-0562F
FT-0552F
F-1232
F-1232
FT-0552F
Z40-668
344.039
25
5
25
73
5
72
55
72
5
73

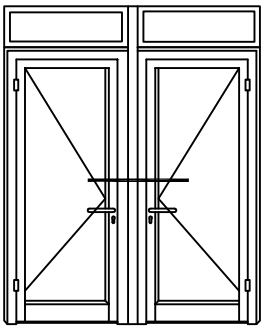

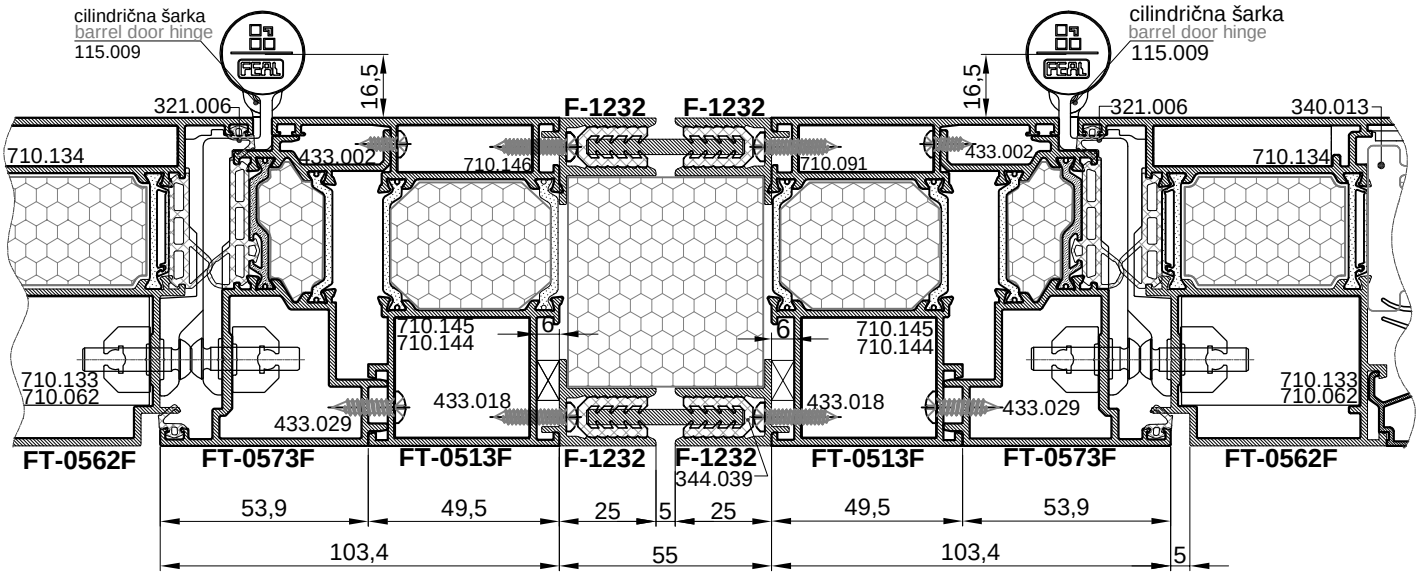
cilindrična šarka
barrel door hinge
115.009
16,5
321.006
F-1232
F-1232
340.013
710.134
433.002
710.146
710.091
710.145
710.144
6
710.133
710.062
433.018
433.029
FT-0562F
FT-0573F
FT-0513F
F-1232
344.039
53,9
49,5
25
5
103,4
55

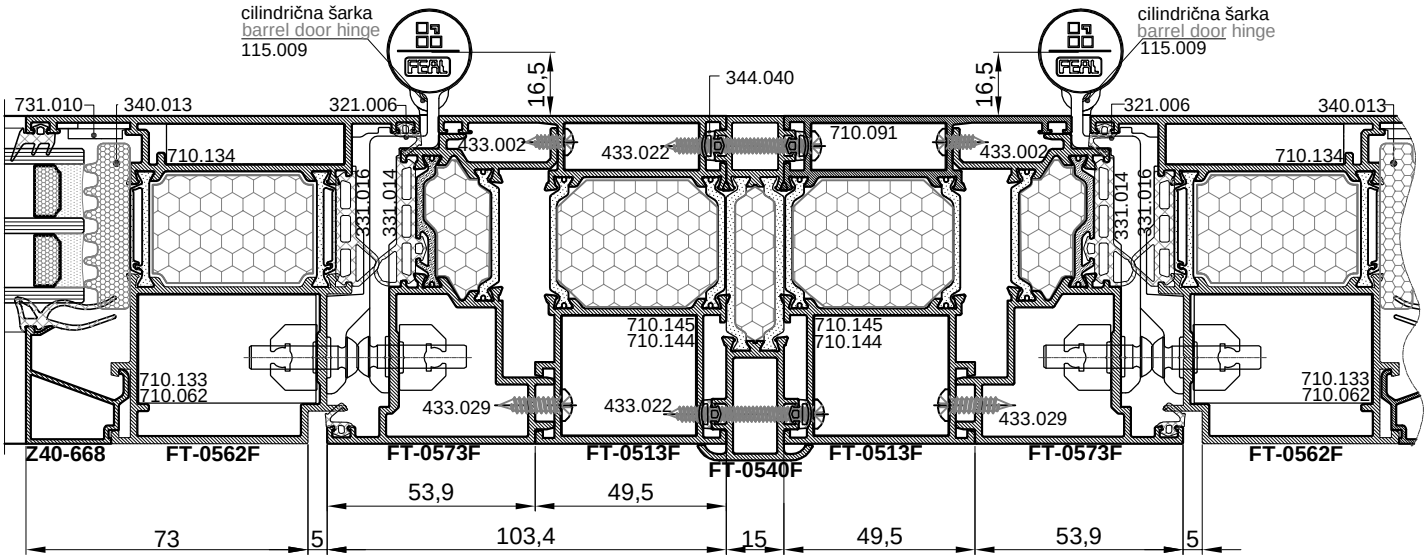
cilindrična šarka
barrel door hinge
115.009
16,5
344.040
731.010
340.013
321.006
710.134
433.002
433.022
710.091
331.016
331.014
710.145
710.144
710.133
710.062
433.029
Z40-668
FT-0562F
FT-0573F
FT-0513F
FT-0540F
53,9
49,5
73
5
103,4
15

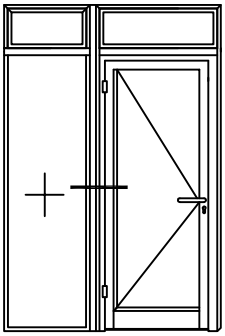

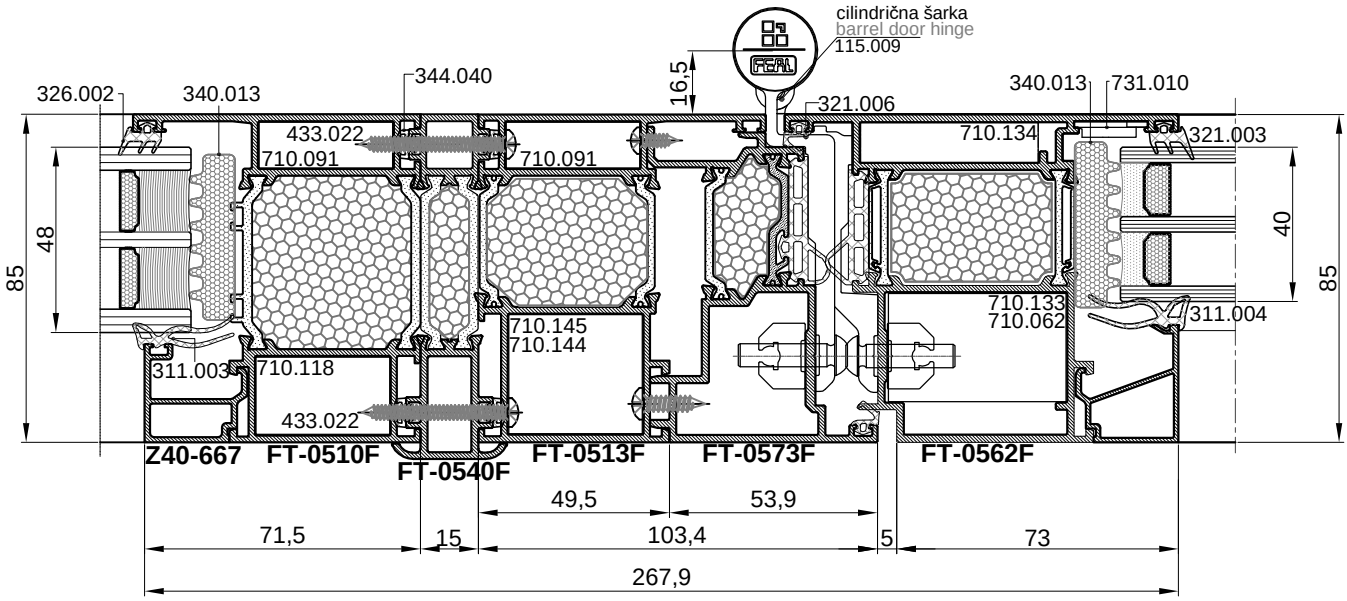
cilindrična šarka
barrel door hinge
115.009
16,5
326.002
340.013
344.040
321.006
340.013
731.010
433.022
710.091
710.091
710.134
321.003
48
85
40
85
710.133
710.062
311.004
710.145
710.144
311.003
710.118
433.022
Z40-667
FT-0510F
FT-0540F
FT-0513F
FT-0573F
FT-0562F
49,5
53,9
71,5
15
103,4
5
73
267,9

Presjeci
-vrata Termo 85 VP
ugradnja panela kopčom-
Cross sections
-door Termo 85 VP
installation of a panel with a buckle-

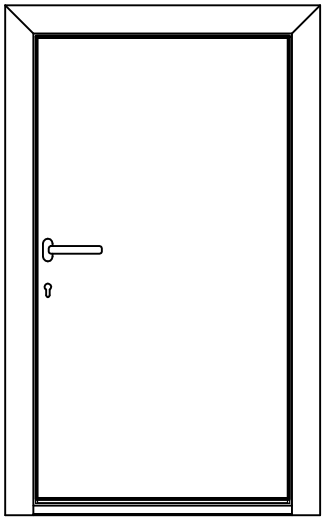

ISPUNA "PANEL"
FILLING"PANEL"

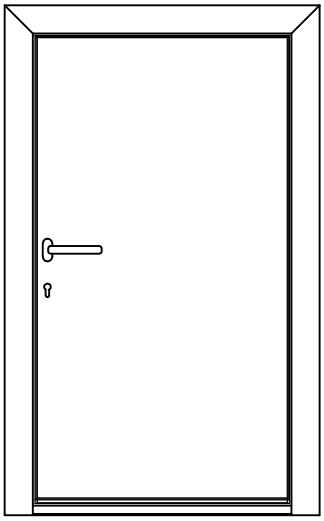

ISPUNA "STAKLO"
FILLING "GLASS"

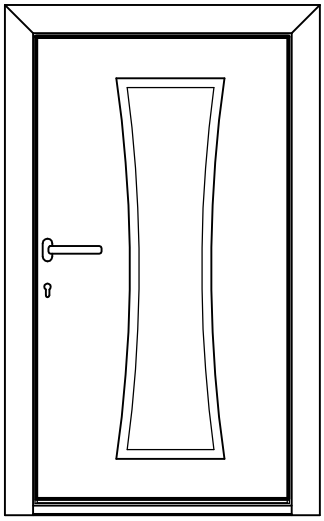

ISPUNA "PANEL + STAKLO"
FILLING "PANEL + GLASS"

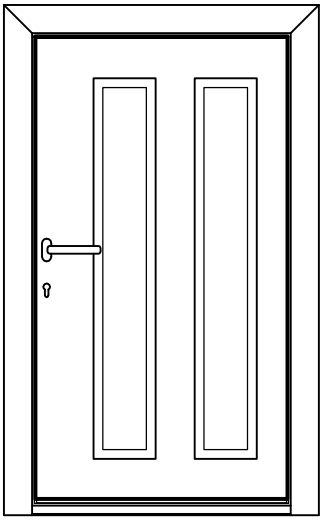

ISPUNA "PANEL + STAKLO"
FILLING "PANEL + GLASS"

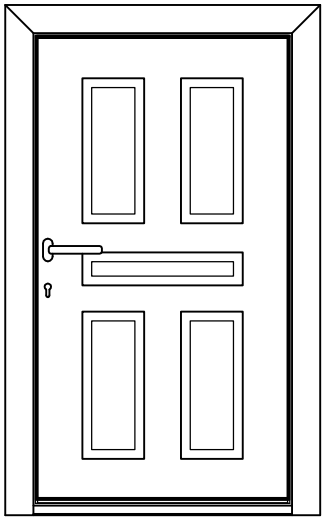

ISPUNA "PANEL + STAKLO"
FILLING "PANEL + GLASS"

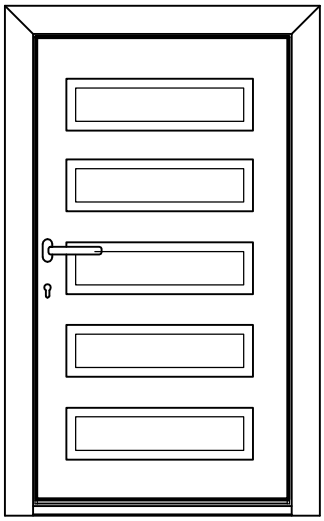

ISPUNA "PANEL + STAKLO"
FILLING "PANEL + GLASS"

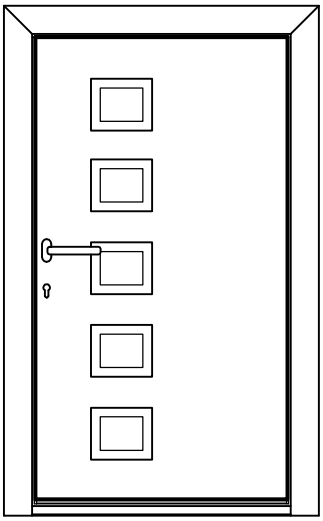

ISPUNA "PANEL + STAKLO"
FILLING "PANEL + GLASS"

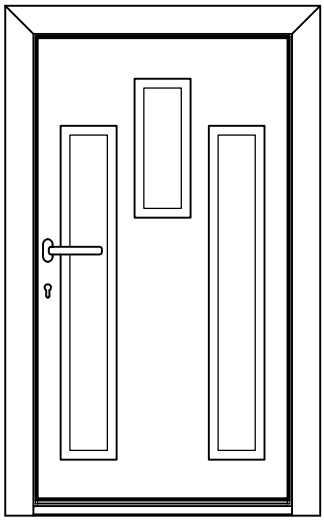

ISPUNA "PANEL + STAKLO"
FILLING "PANEL + GLASS"

NAPOMENA:DIZAJN ISPUNE KRILA VRATA SA MOŽE RADITI I PO ŽELJI NARUČITELJA
REMARK: DOOR DESIGN CAN BE MADE BY CUSTOMER'S WISHES

Vrata Termo 85 VP - ugradnja panela s kopčom
Door Termo 85 VP - installation of a panel with a buckle

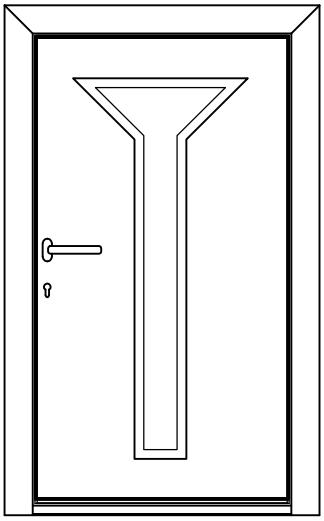

ISPUNA "PANEL + STAKLO"
FILLING "PANEL + GLASS"

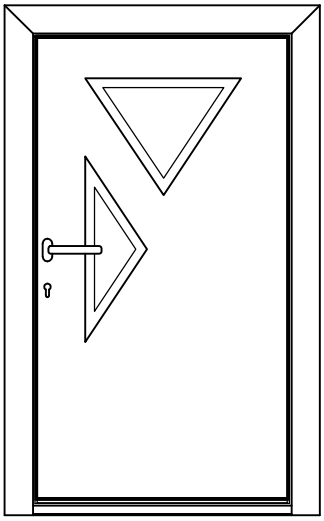

ISPUNA "PANEL + STAKLO"
FILLING "PANEL + GLASS"

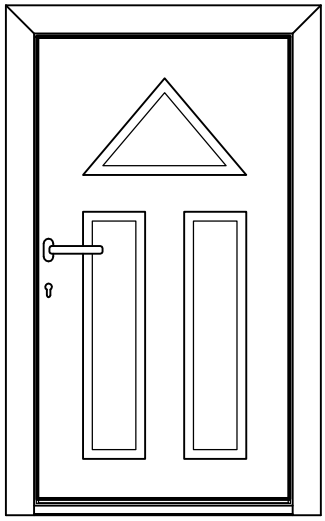

ISPUNA "PANEL + STAKLO"
FILLING "PANEL + GLASS"

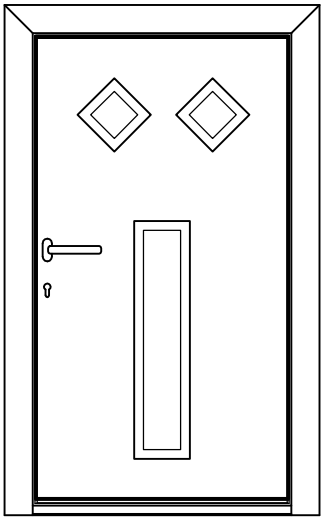

ISPUNA "PANEL + STAKLO"
FILLING "PANEL + GLASS"

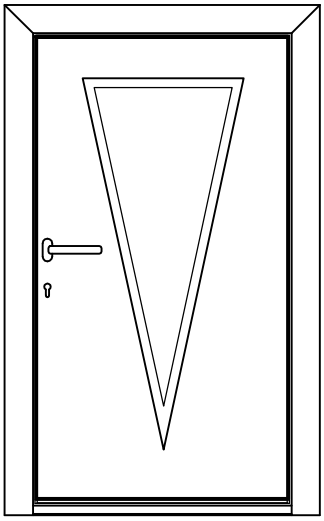

ISPUNA "PANEL + STAKLO"
FILLING "PANEL + GLASS"

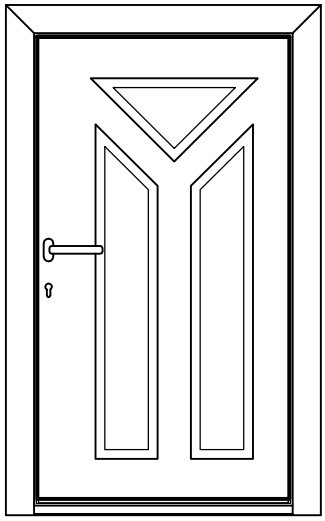

ISPUNA "PANEL + STAKLO"
FILLING "PANEL + GLASS"

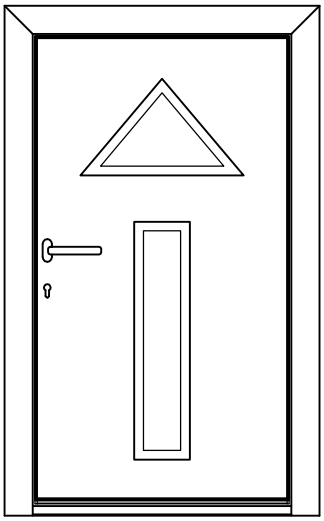

ISPUNA "PANEL + STAKLO"
FILLING "PANEL + GLASS"

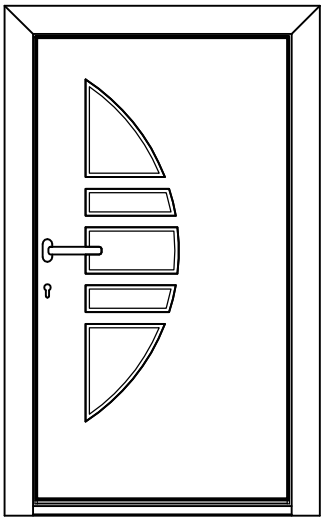

ISPUNA "PANEL + STAKLO"
FILLING "PANEL + GLASS"

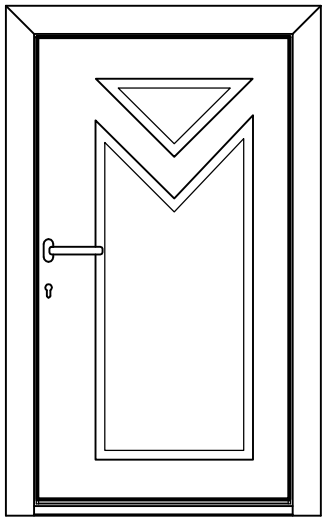

ISPUNA "PANEL + STAKLO"
FILLING "PANEL + GLASS"

NAPOMENA:DIZAJN ISPUNE KRILA VRATA SA MOŽE RADITI I PO ŽELJI NARUČITELJA
REMARK: DOOR DESIGN CAN BE MADE BY CUSTOMER'S WISHES

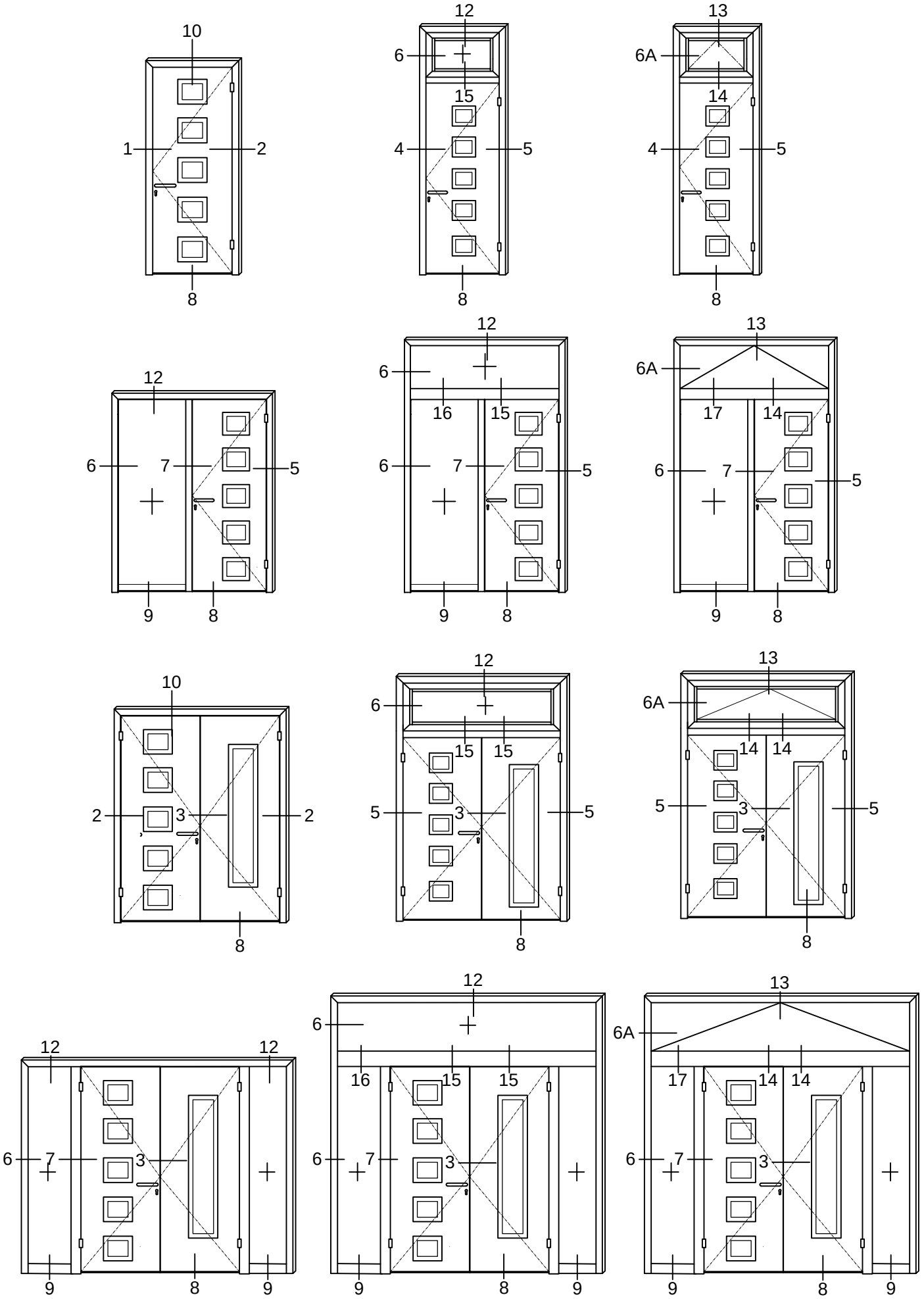
10
1
2
8
12
6
15
4
5
8
13
6A
14
4
5
8
12
6
7
5
9
8
12
6
16
15
6
7
5
9
8
13
6A
17
14
6
7
5
9
8
10
2
3
2
8
12
6
15
15
5
3
5
8
13
6A
14
14
5
3
5
8
12
12
6
7
3
9
8
9
12
6
16
15
15
6
7
3
9
8
9
13
6A
17
14
14
6
7
3
9
8
9

PRESJEK-1
CROSS SECTION-1

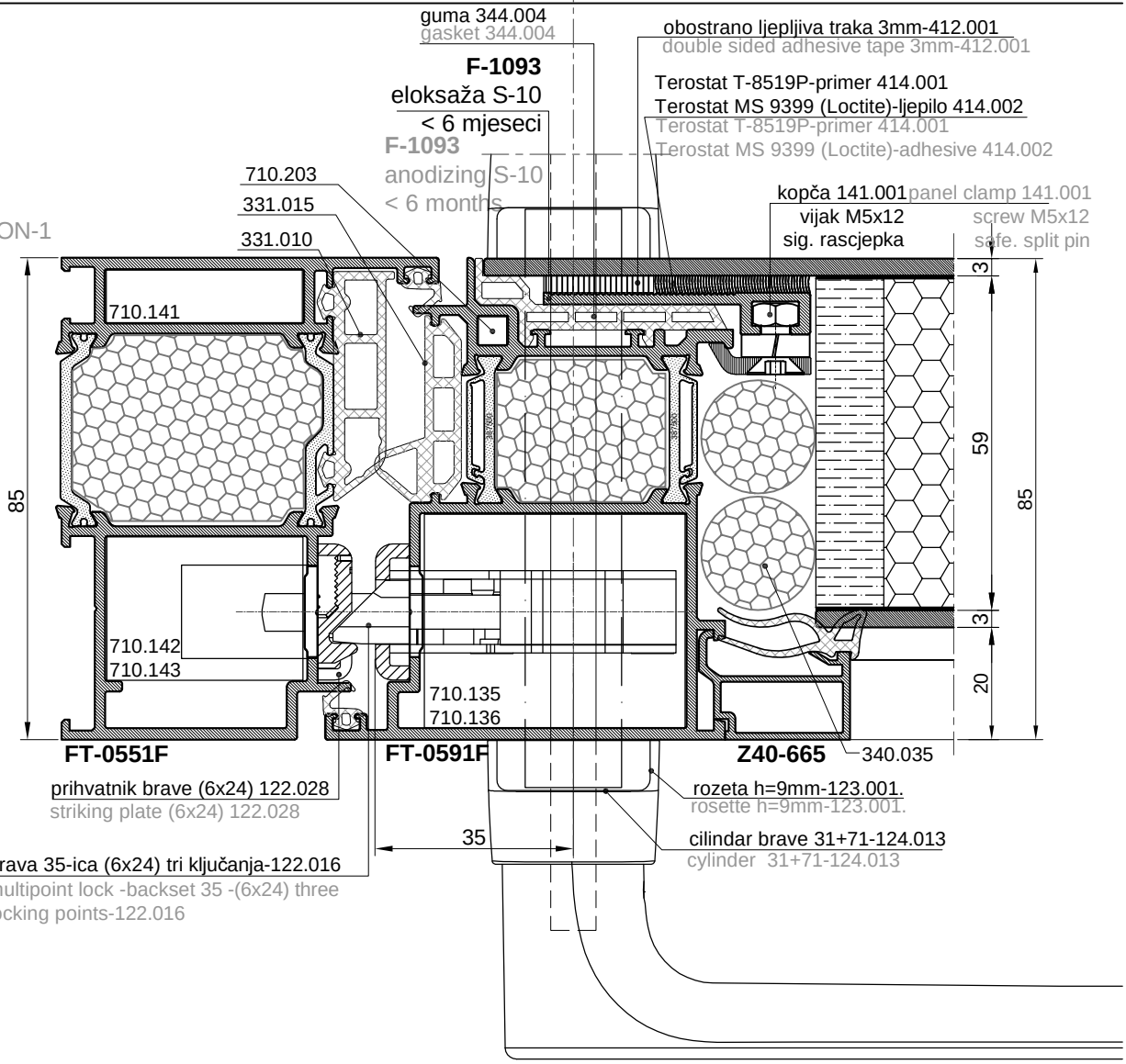

PRESJEK-2
CROSS SECTION-2

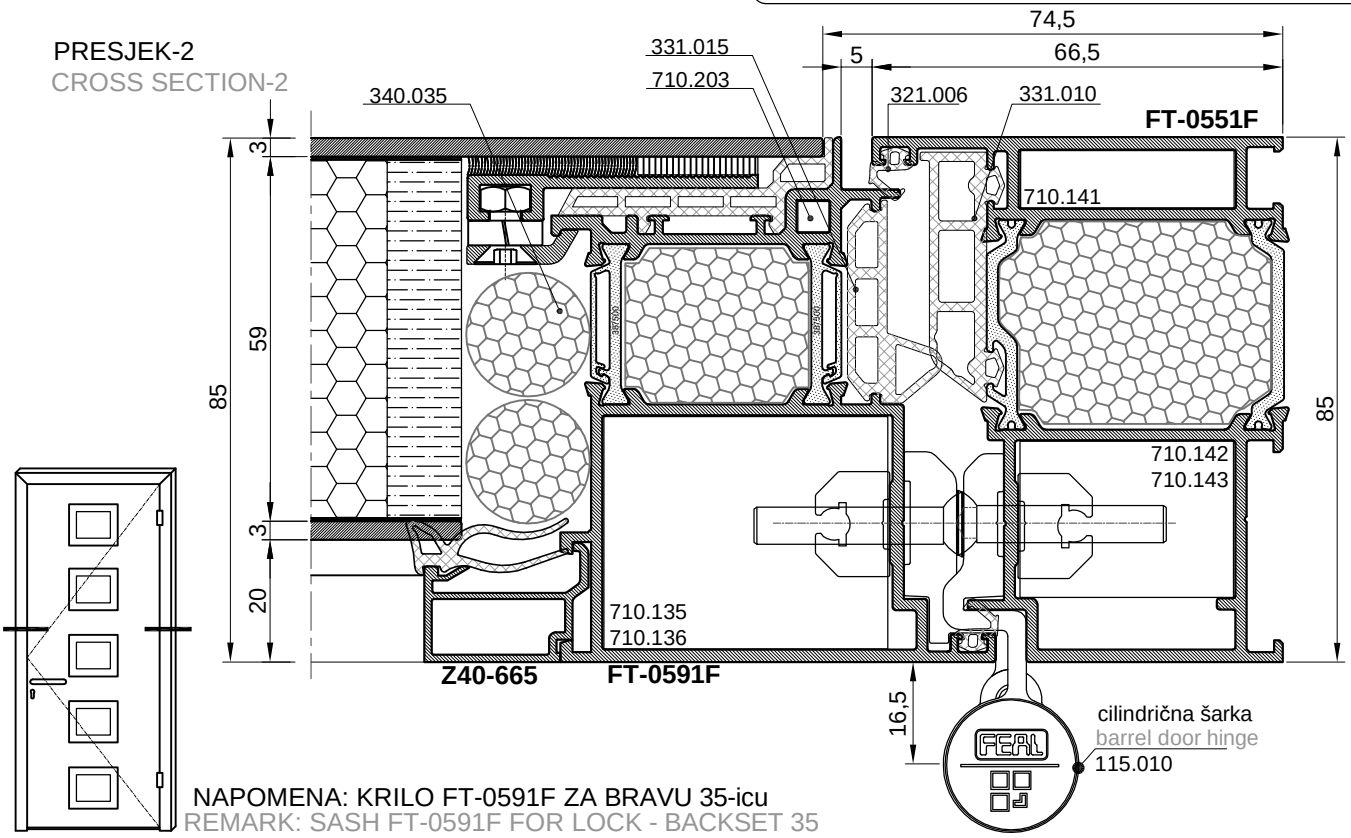

NAPOMENA: KRILO FT-0591F ZA BRAVU 35-icu
REMARK: SASH FT-0591F FOR LOCK - BACKSET 35

PRESJEK-1
CROSS SECTION-1

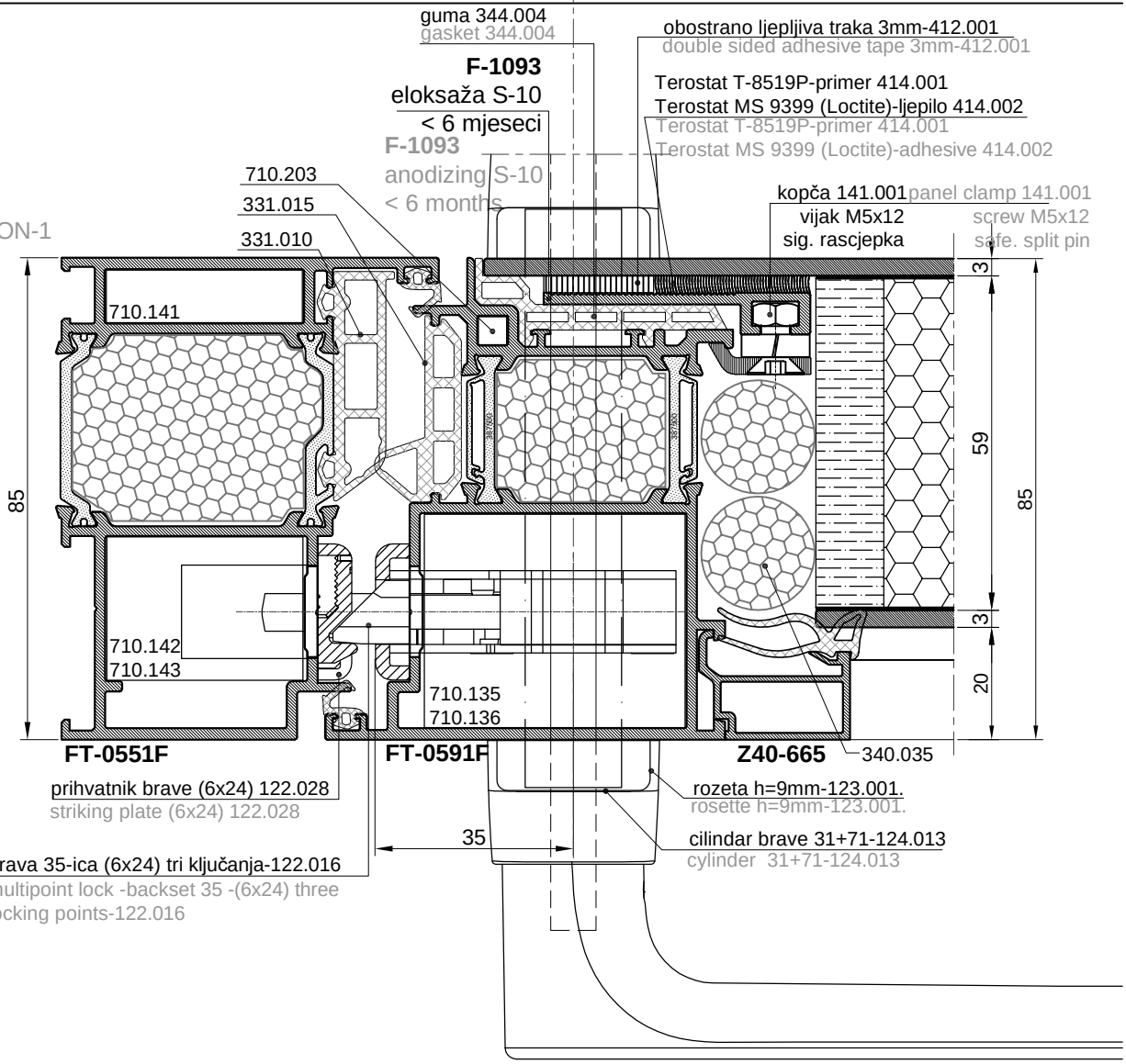

PRESJEK-2
CROSS SECTION-2

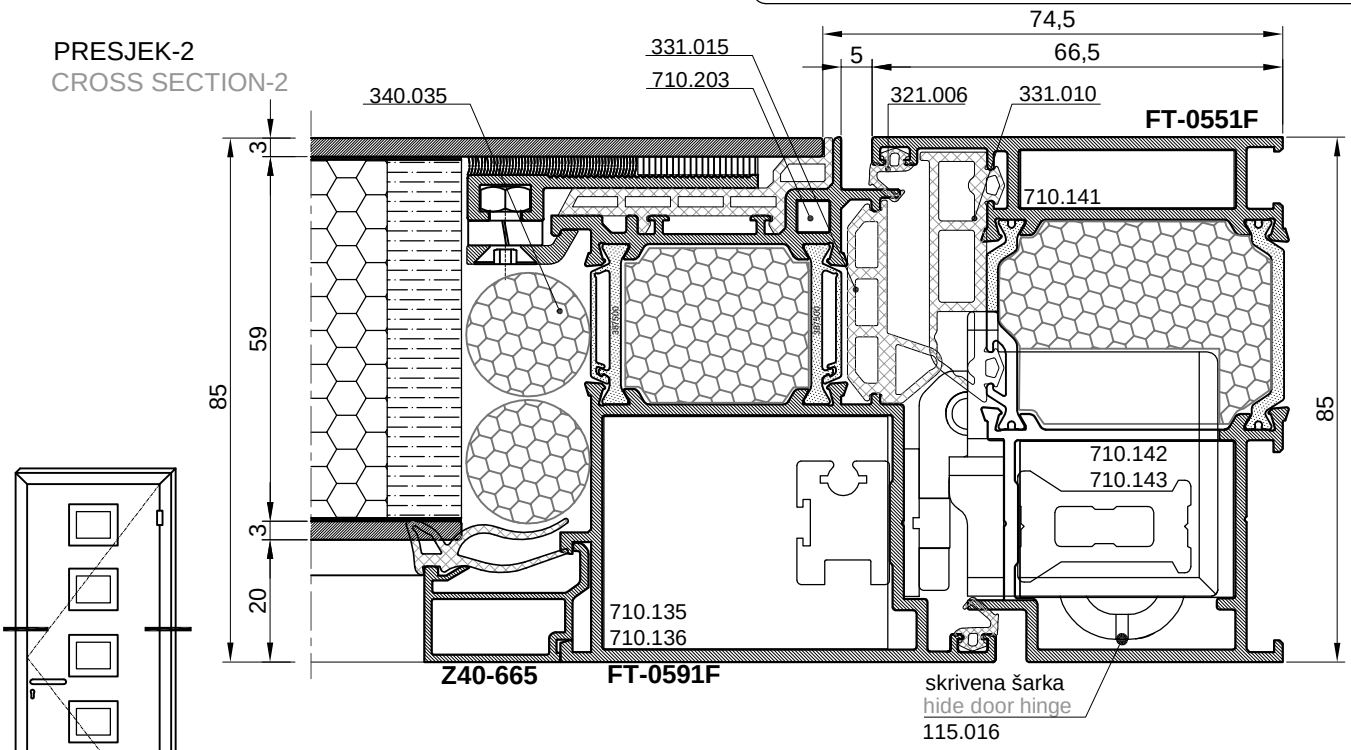

NAPOMENA: KRILO FT-0591F ZA BRAVU 35-icu
REMARK: SASH FT-0591F FOR LOCK - BACKSET 35

PRESJEK-1
CROSS SECTION-1

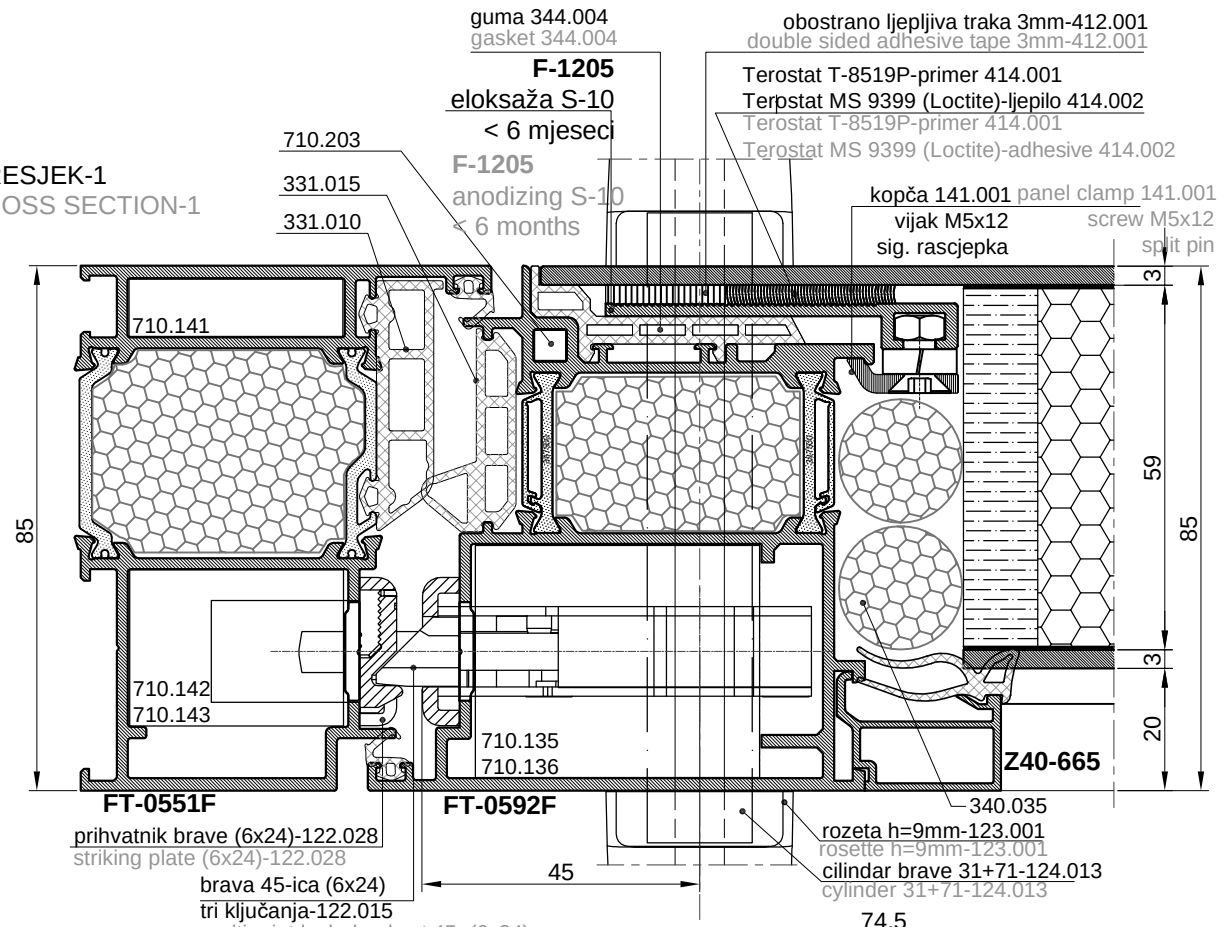

PRESJEK-2
CROSS SECTION-2

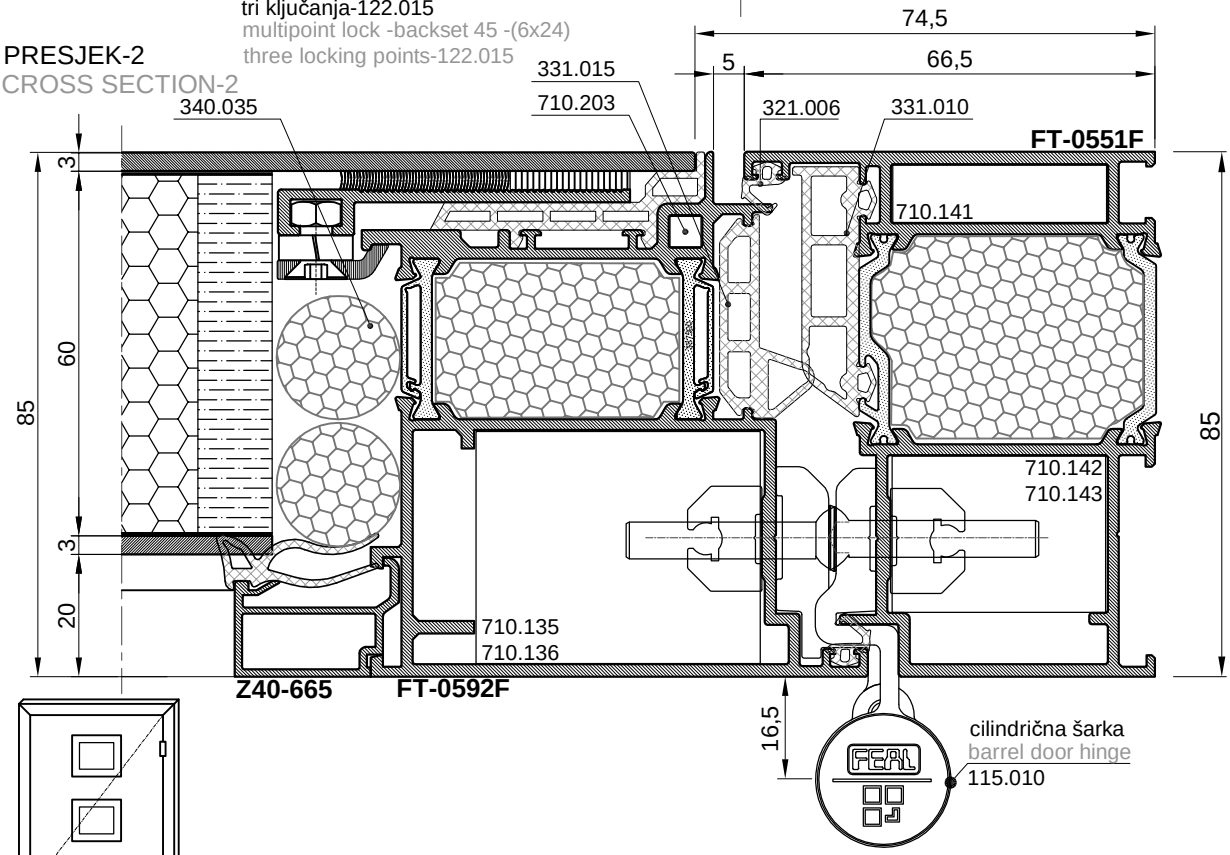

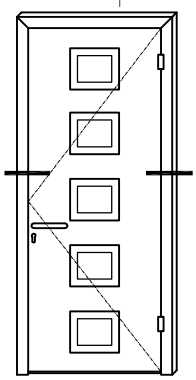

NAPOMENA: KRILO FT-0592F ZA BRAVU 45-icu
REMARK: SASH FT-0592F FOR LOCK - BACKSET 45

PRESJEK-1
CROSS SECTION-1

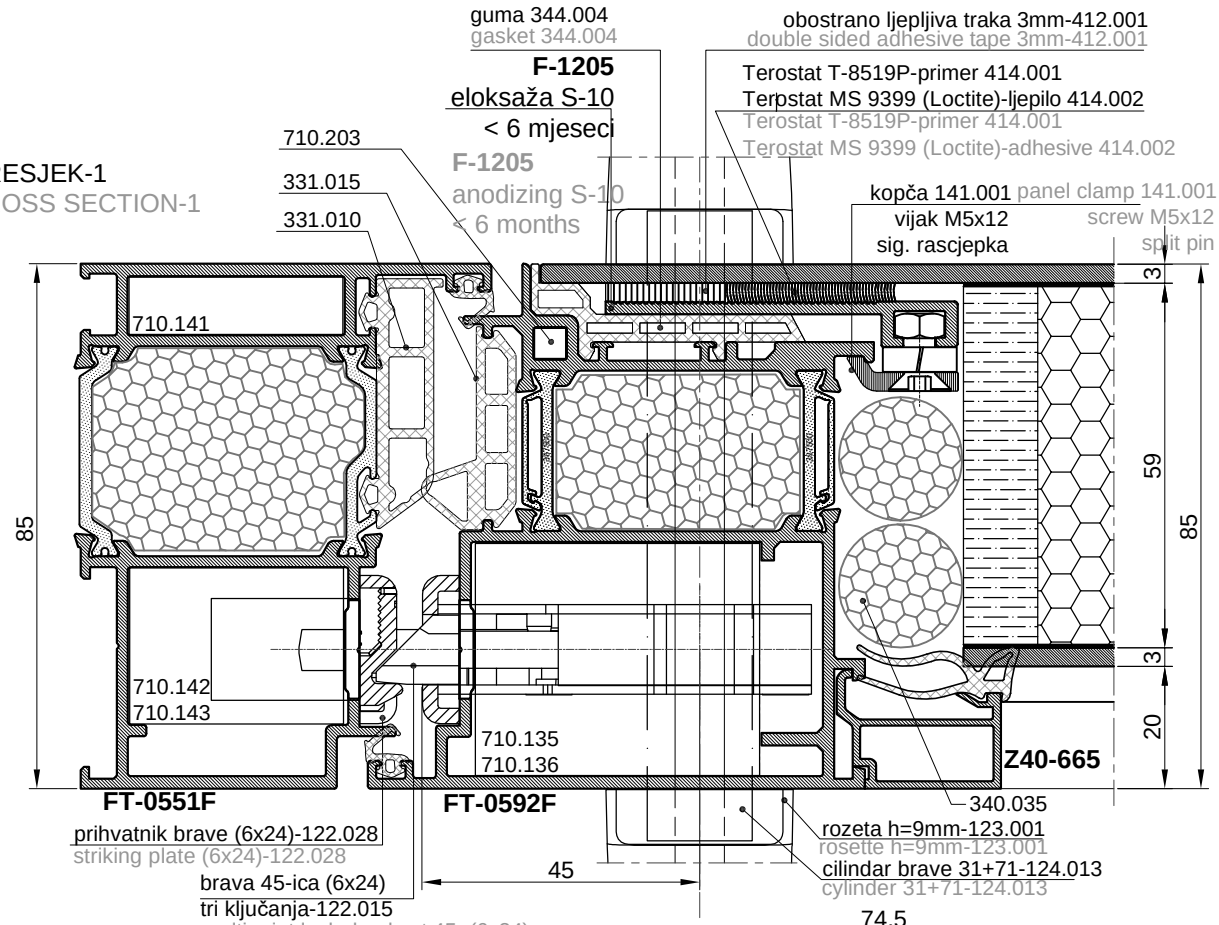

PRESJEK-2
CROSS SECTION-2

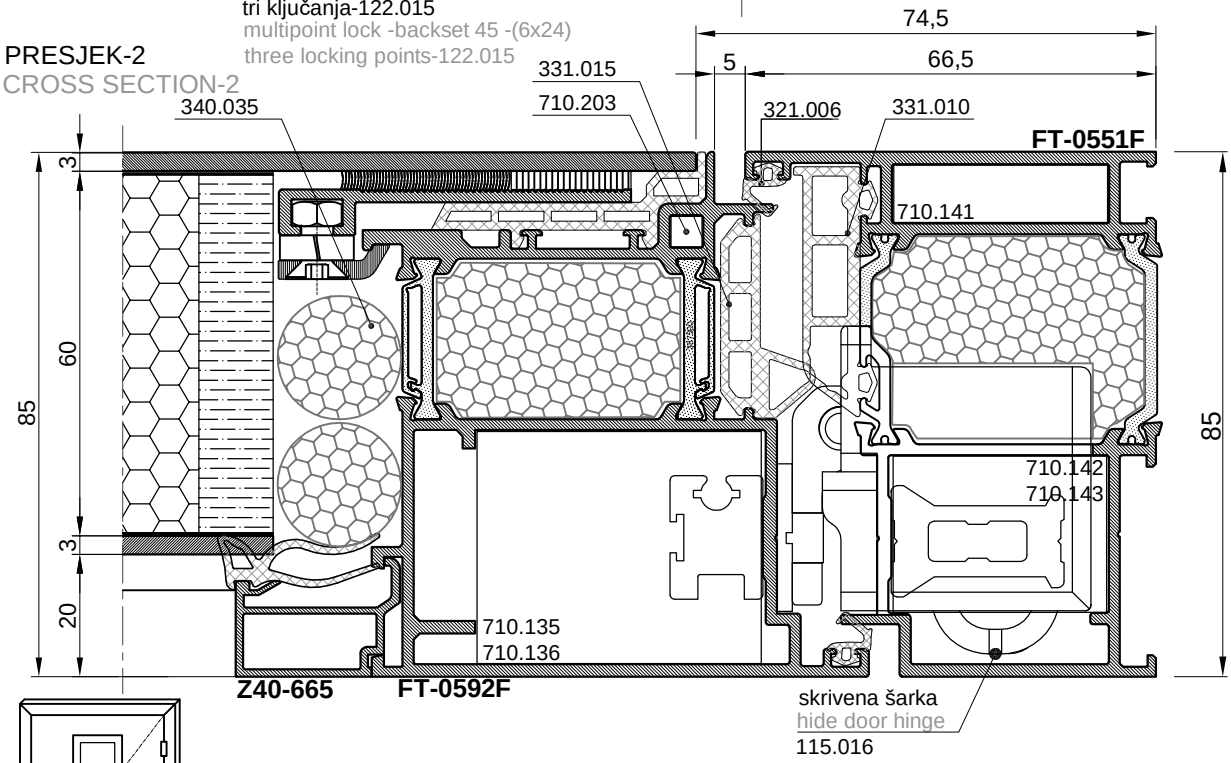

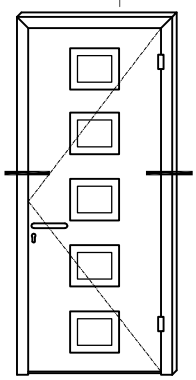

NAPOMENA: KRILO FT-0592F ZA BRAVU 45-icu
REMARK: SASH FT-0592F FOR LOCK - BACKSET 45

PRESJEK-1
CROSS SECTION-1

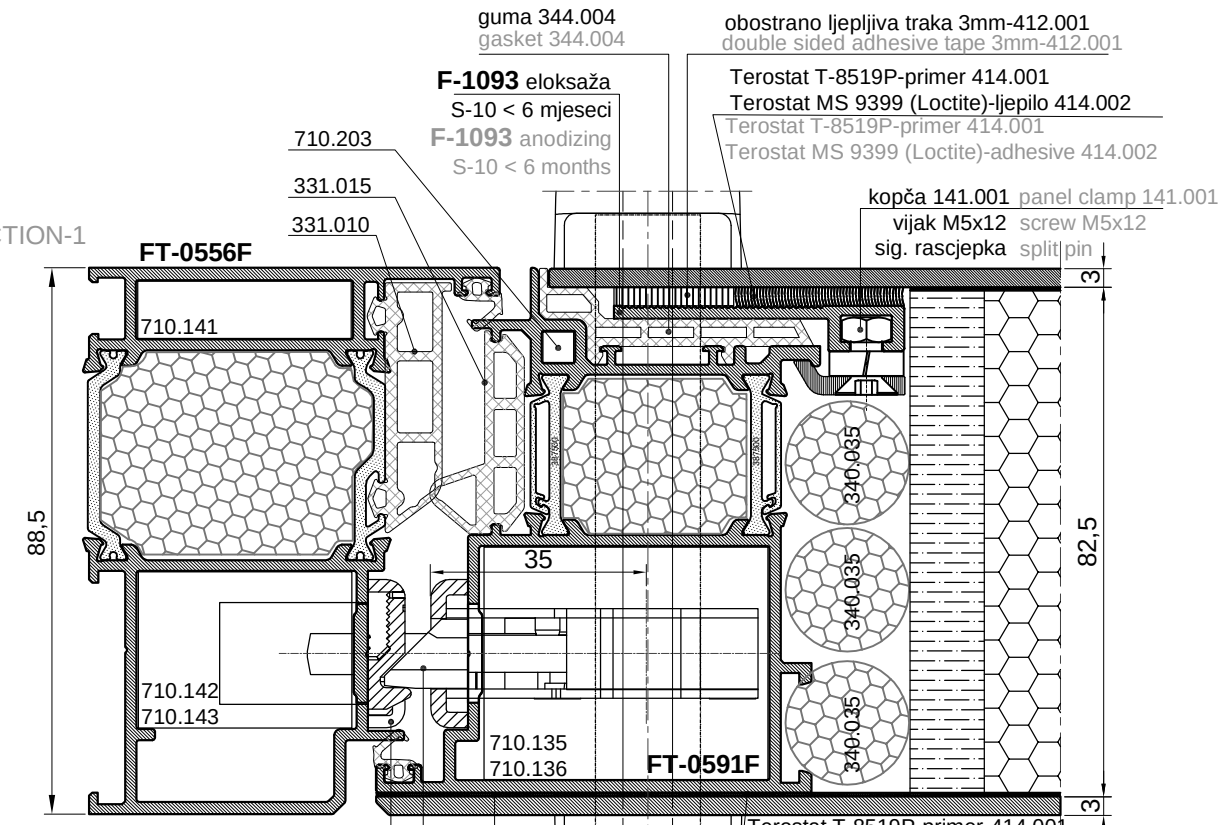

PRESJEK-2
CROSS SECTION-2

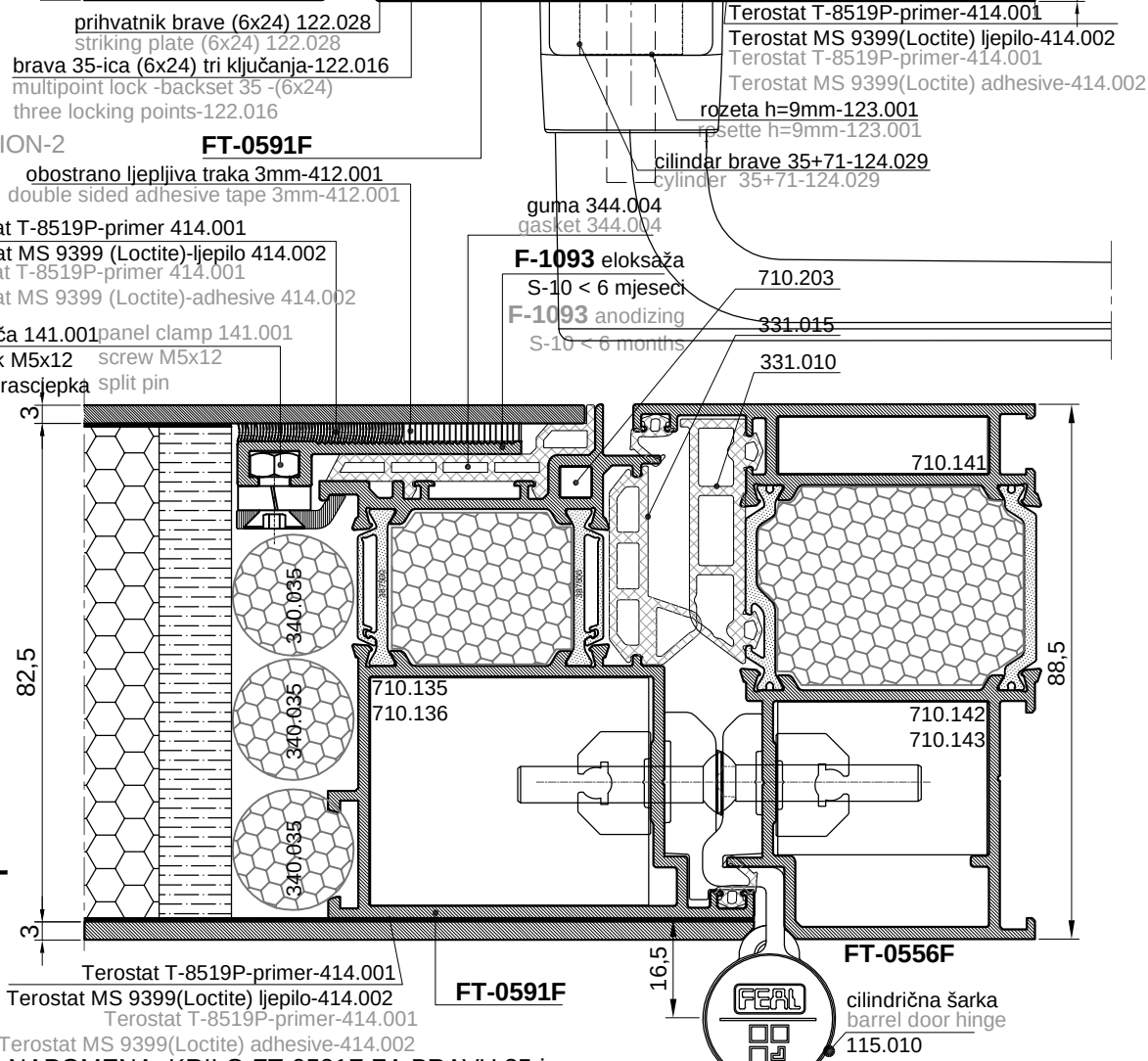

NAPOMENA: KRILO FT-0591F ZA BRAVU 35-icu
RAM FT-0556F (ravna linija unutarnjeg lima)

REMARK: SASH FT-0591F FOR LOCK-BACKSET 35
FRAME FT-0556F (flat line inside sheet)

PRESJEK-1
CROSS SECTION-1

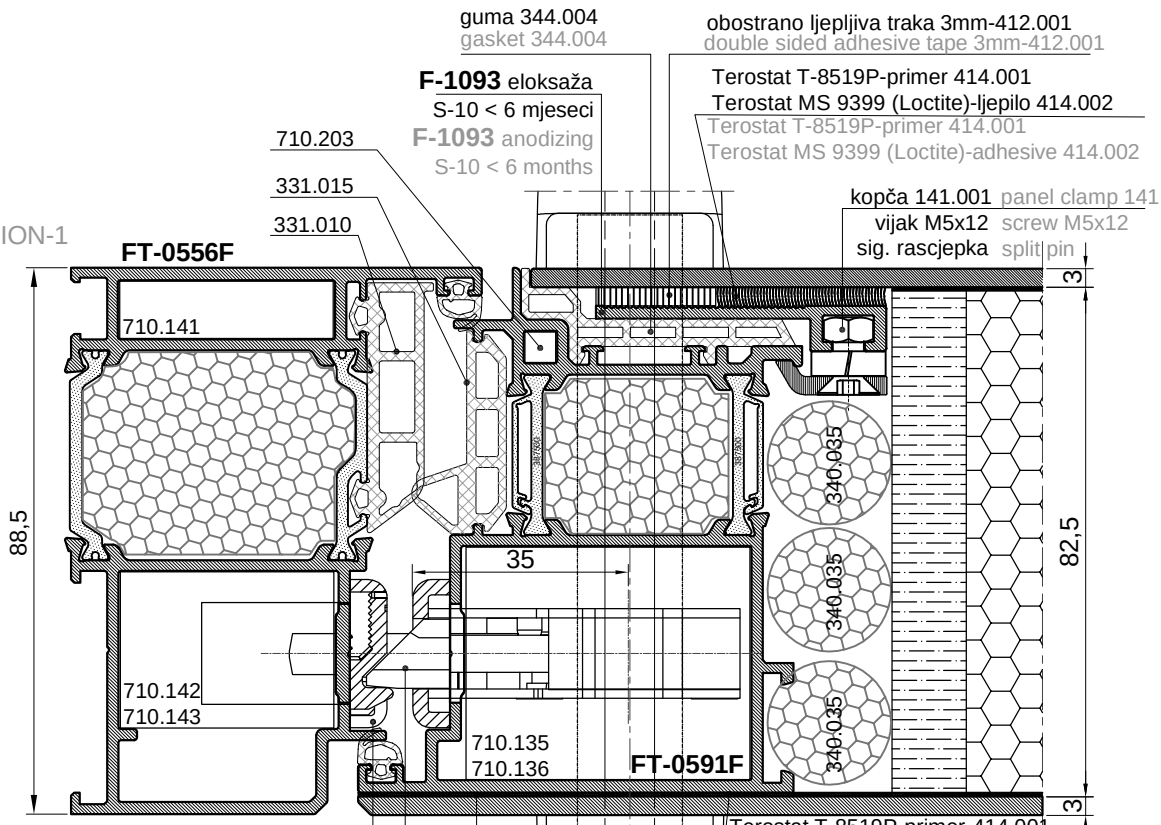

PRESJEK-2
CROSS SECTION-2

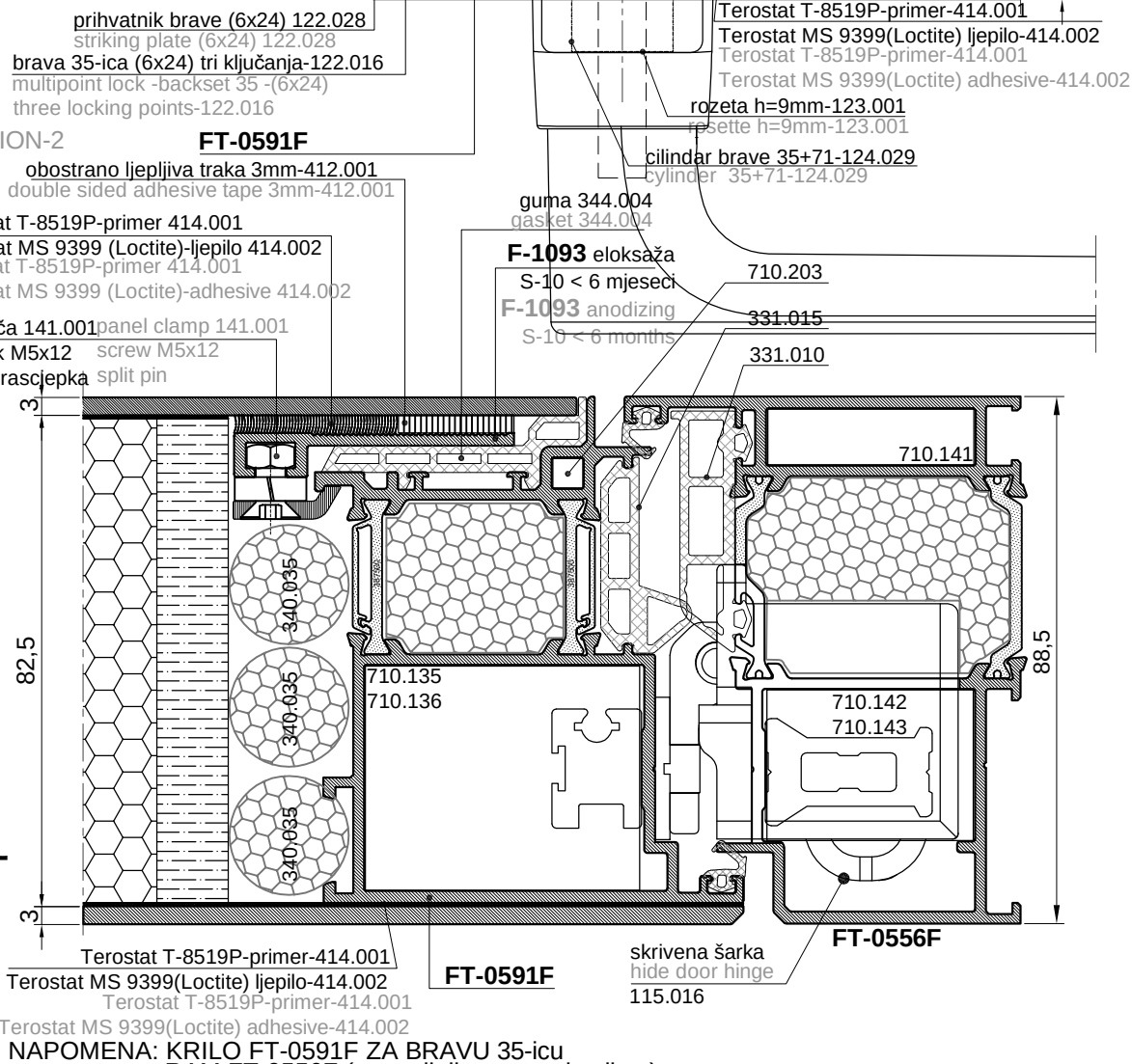

NAPOMENA: KRILO FT-0591F ZA BRAVU 35-icu
RAM FT-0556F (ravna linija unutarnjeg lima)
REMARK: SASH FT-0591F FOR LOCK-BACKSET 35
FRAME FT-0556F (flat line inside sheet)

PRESJEK-1
CROSS SECTION-1

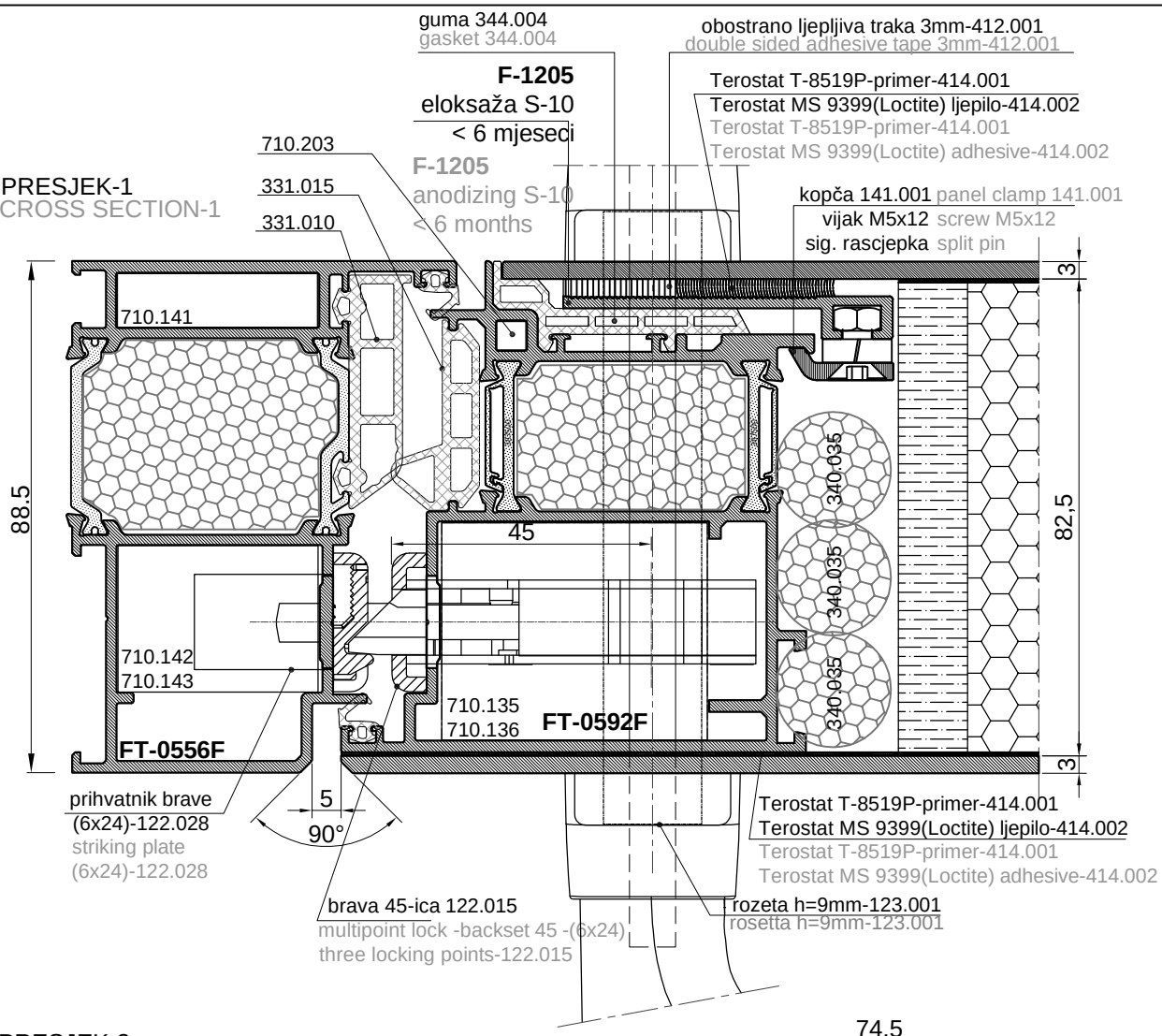

PRESJEK-2
CROSS SECTION-2

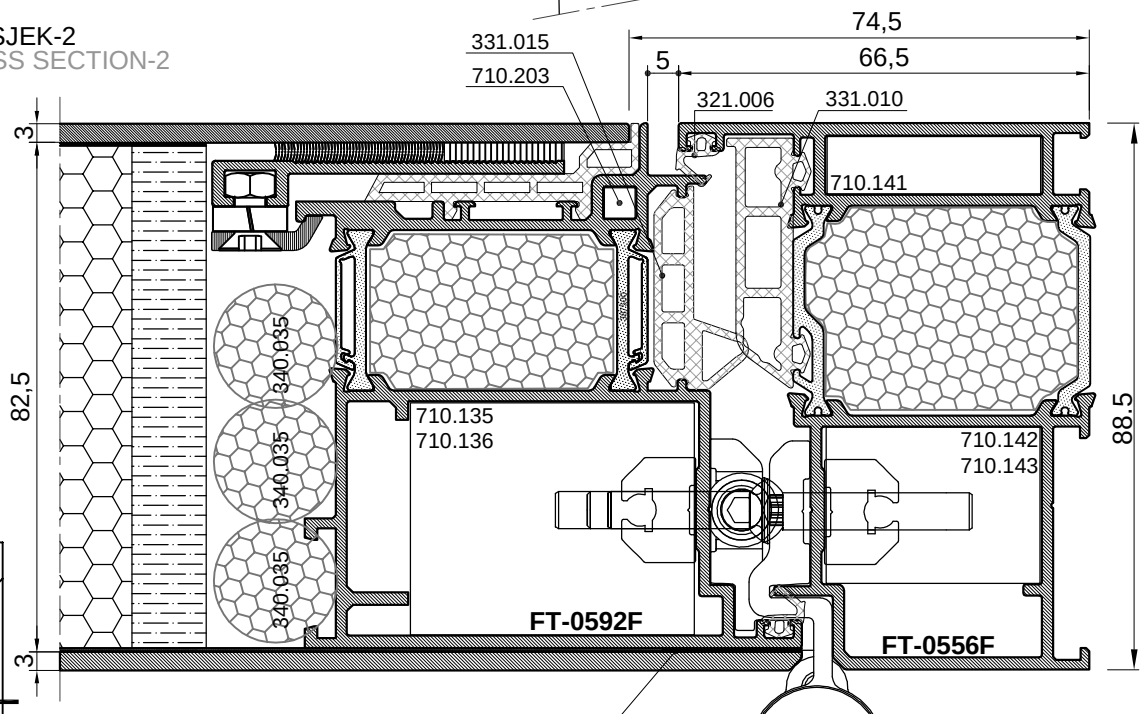

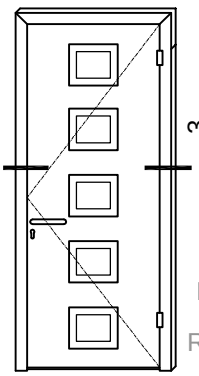

NAPOMENA: KRILO FT-0592F ZA BRAVU 45-icu
RAM FT-0556F (ravna linija unutarnjeg lima)

REMARK: SASH FT-0592F FOR LOCK 45-BACKSET 45
FRAME FT-0556F (flat line inside sheet)

PRESJEK-1
CROSS SECTION-1

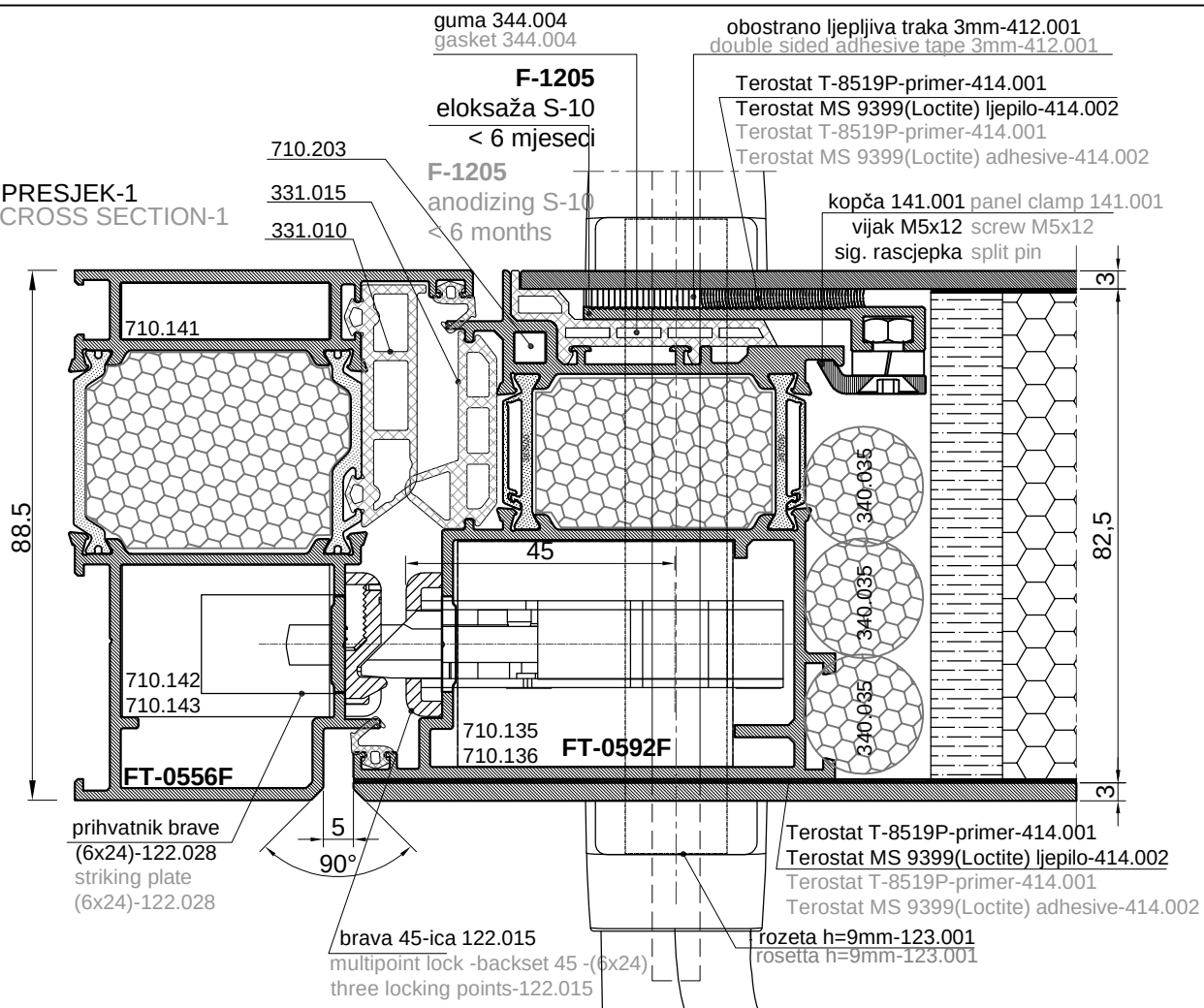

PRESJEK-2
CROSS SECTION-2

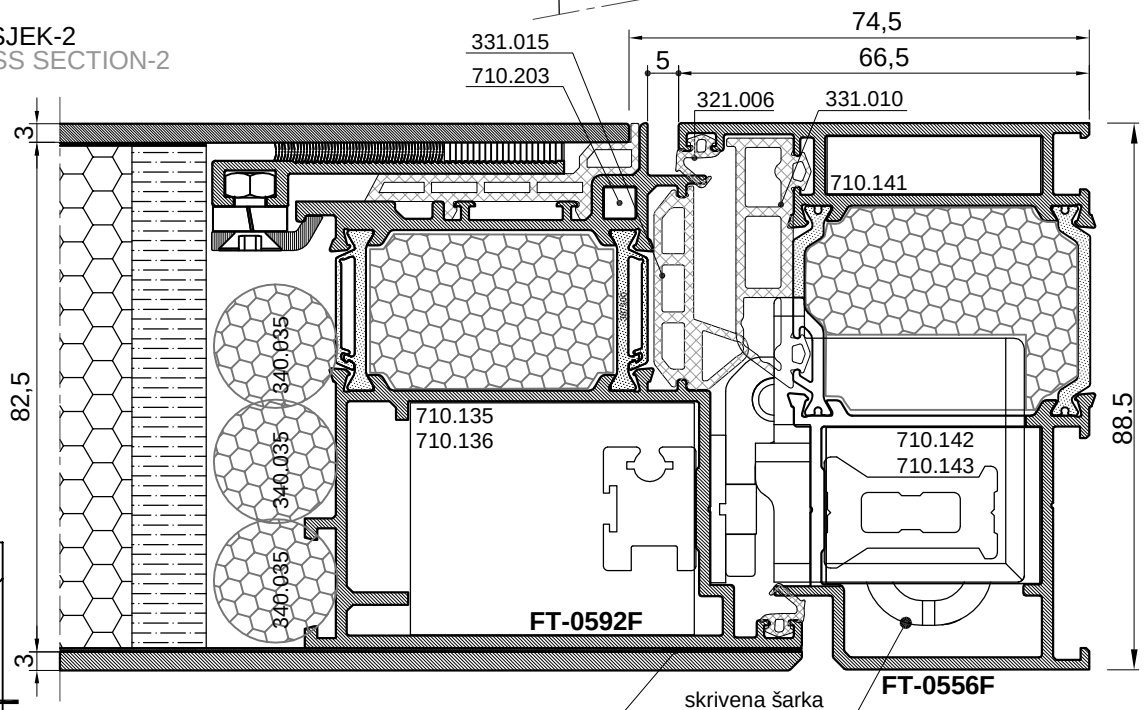

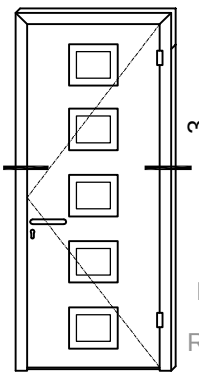

NAPOMENA: KRILO FT-0592F ZA BRAVU 45-icu
RAM FT-0556F (ravna linija unutarnjeg lima)

REMARK: SASH FT-0592F FOR LOCK 45-BACKSET 45
FRAME FT-0556F (flat line inside sheet)

PRESJEK-2
CROSS SECTION-2

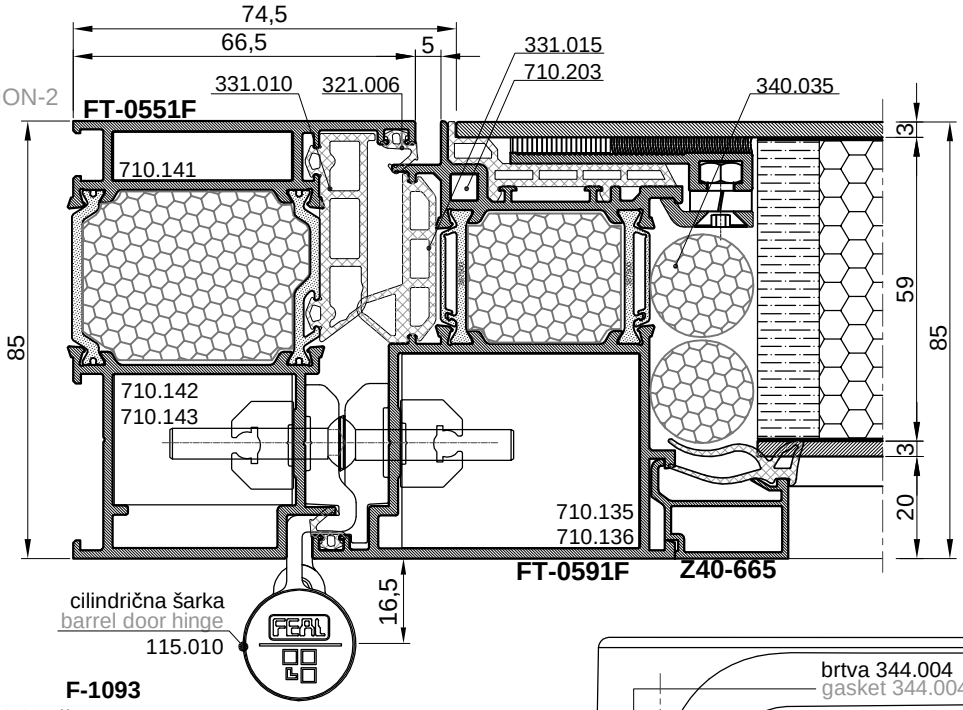

F-1093
eloksaža S-10
< 6 mjeseci

F-1093
anodizing S-10
< 6 months

PRESJEK-3
CROSS SECTION-3

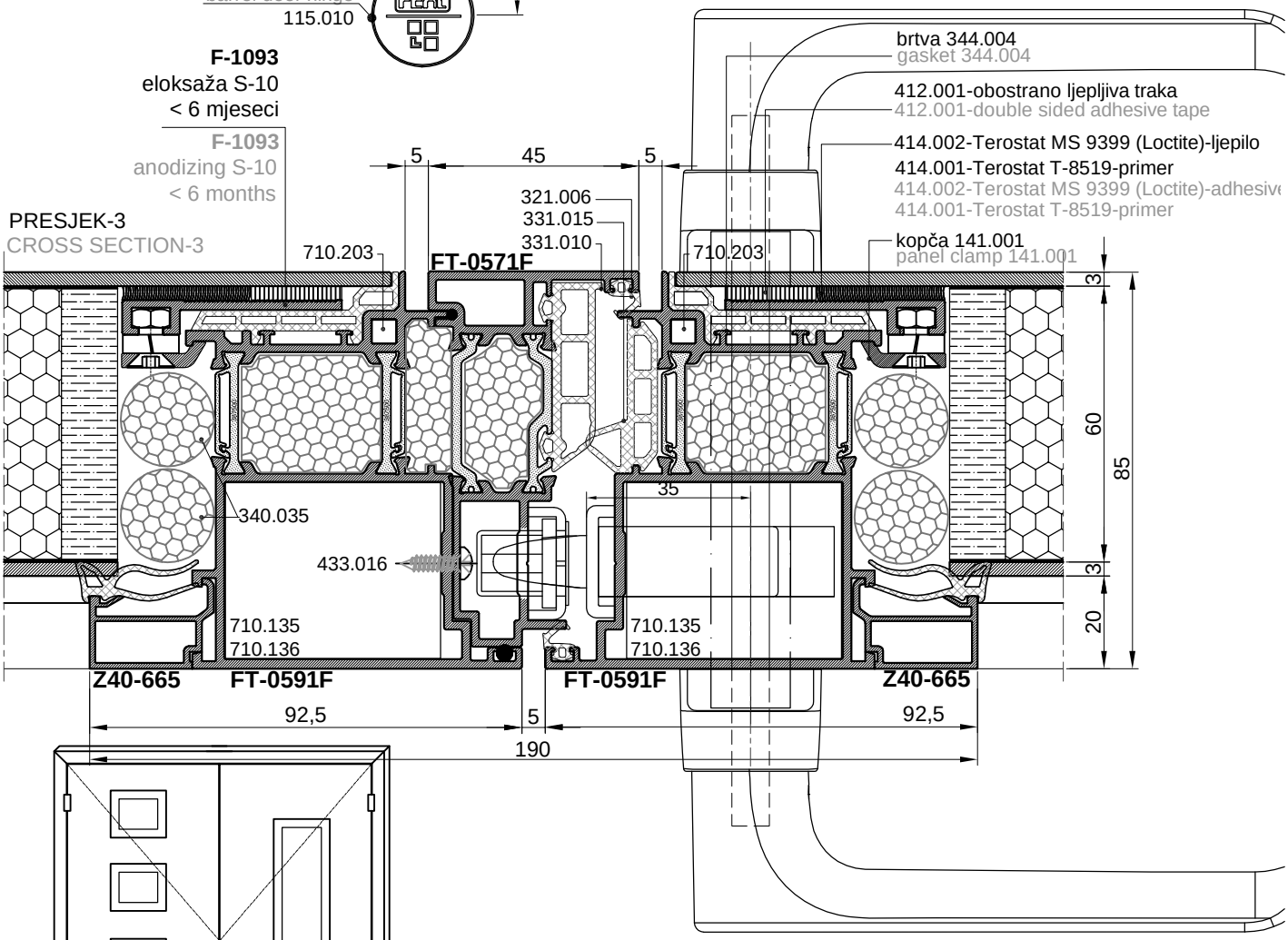

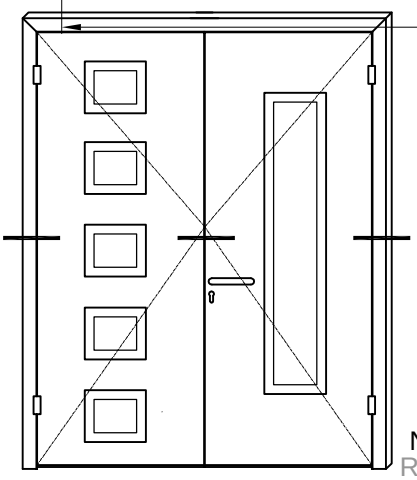

NAPOMENA: KRILO FT-0591F ZA BRAVU 35-icu
REMARK: SASH FT-0591F FOR LOCK - BACKSET 35

PRESJEK-2
CROSS SECTION-2

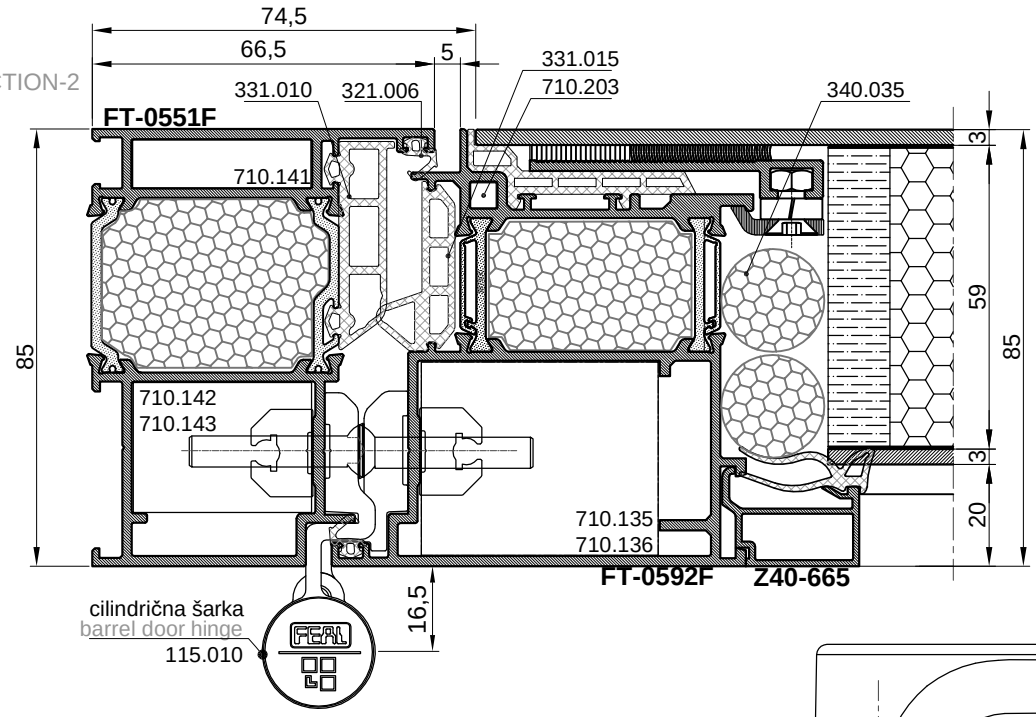

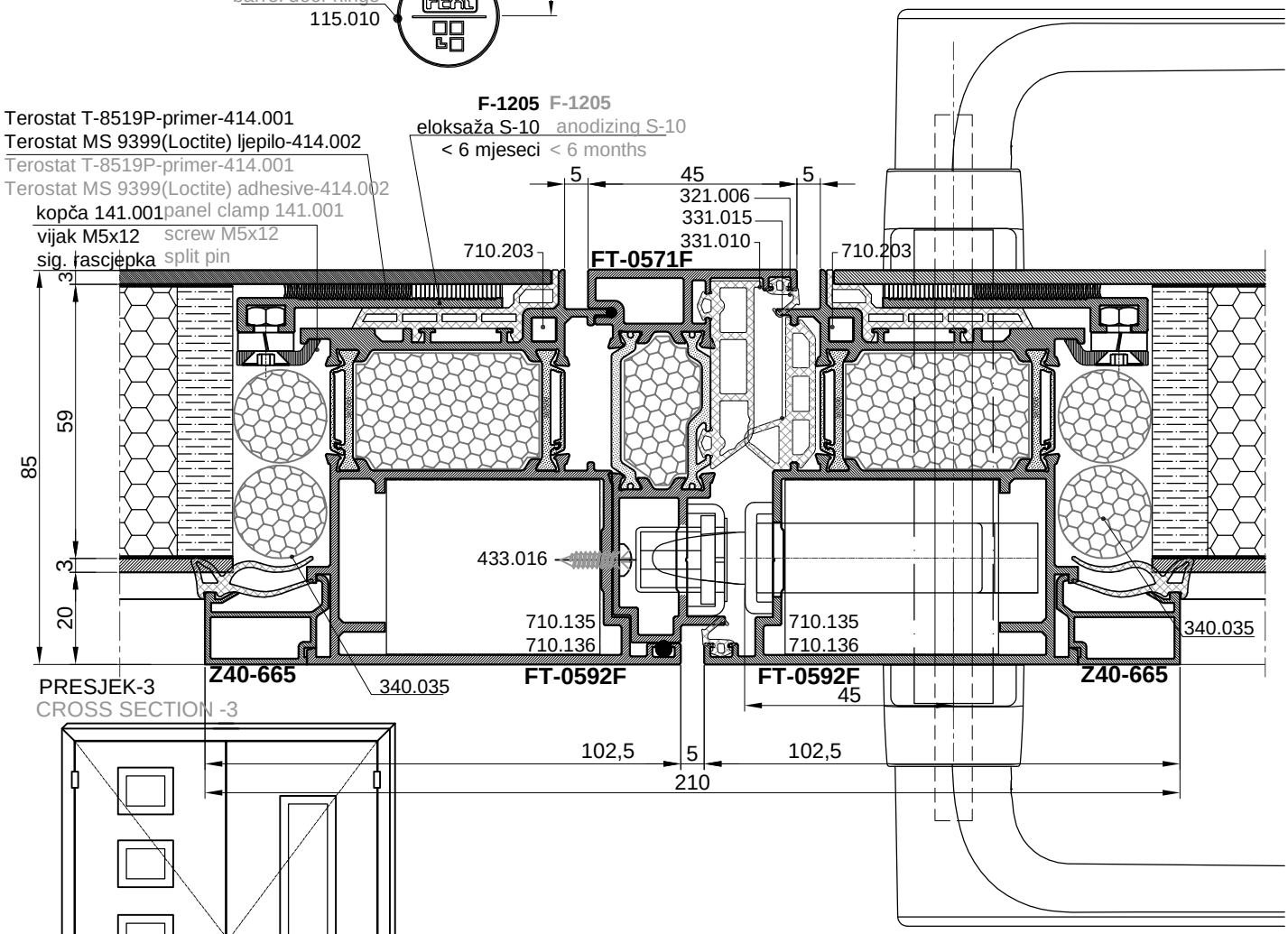

PRESJEK-3
CROSS SECTION -3

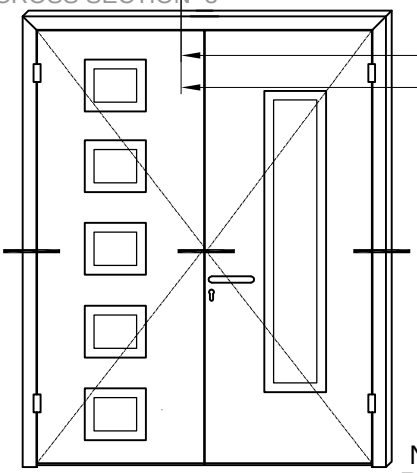

NAPOMENA: KRILO FT-0592F ZA BRAVU 45-icu
REMARK: SASH FT-0592F FOR LOCK -BACKSET 45

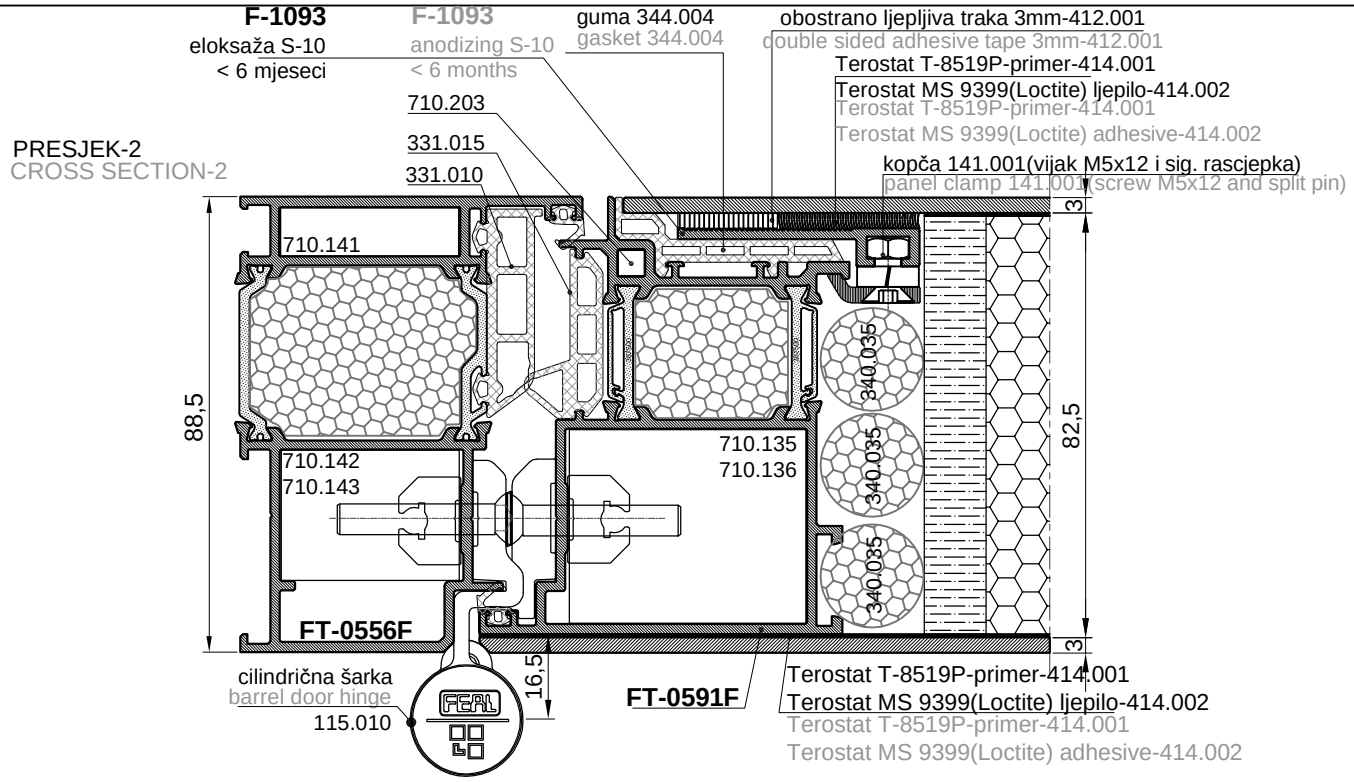

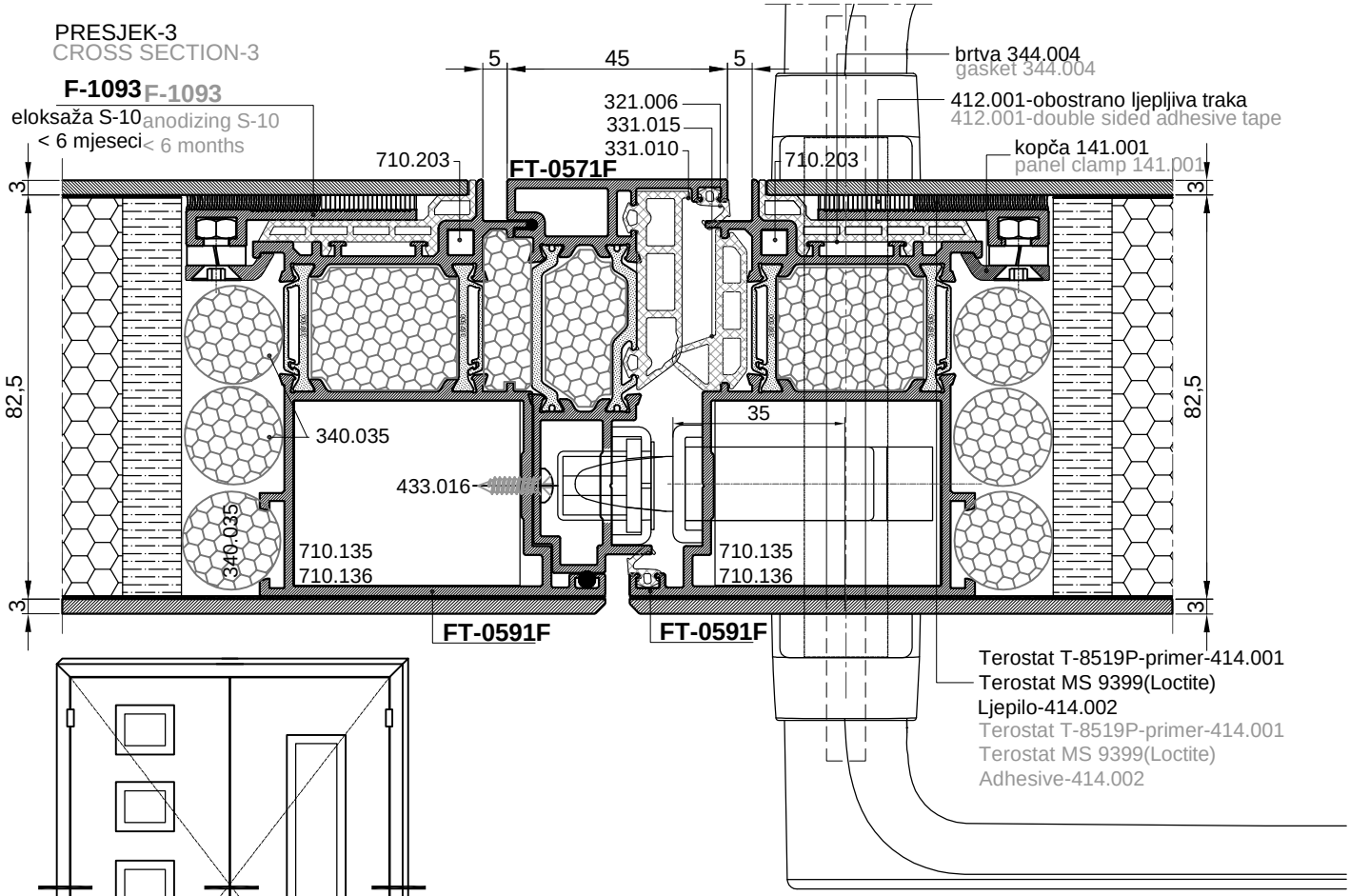

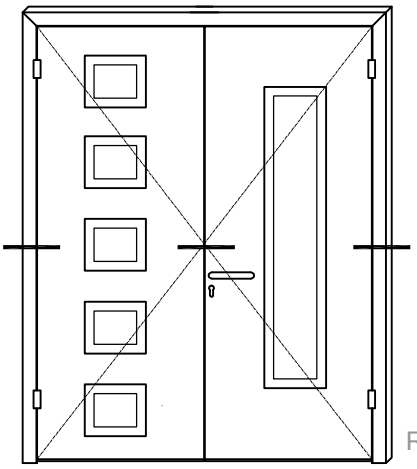

NAPOMENA: KRILO FT-0591F ZA BRAVU 35-icu
RAM FT-0556F (ravna linija unutarnjeg lima)

REMARK: SASH FT-0591F FOR LOCK -BACKSET 35
FRAME FT-0556F (flat line inside sheet)

PRESJEK-2
CROSS SECTION-2

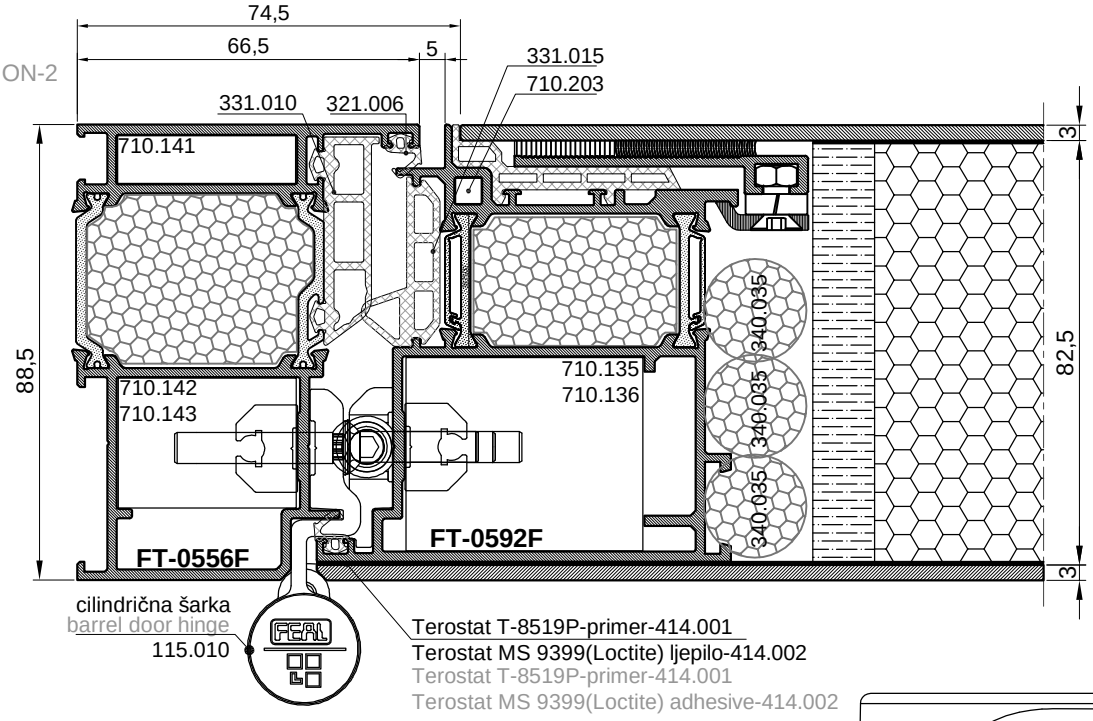

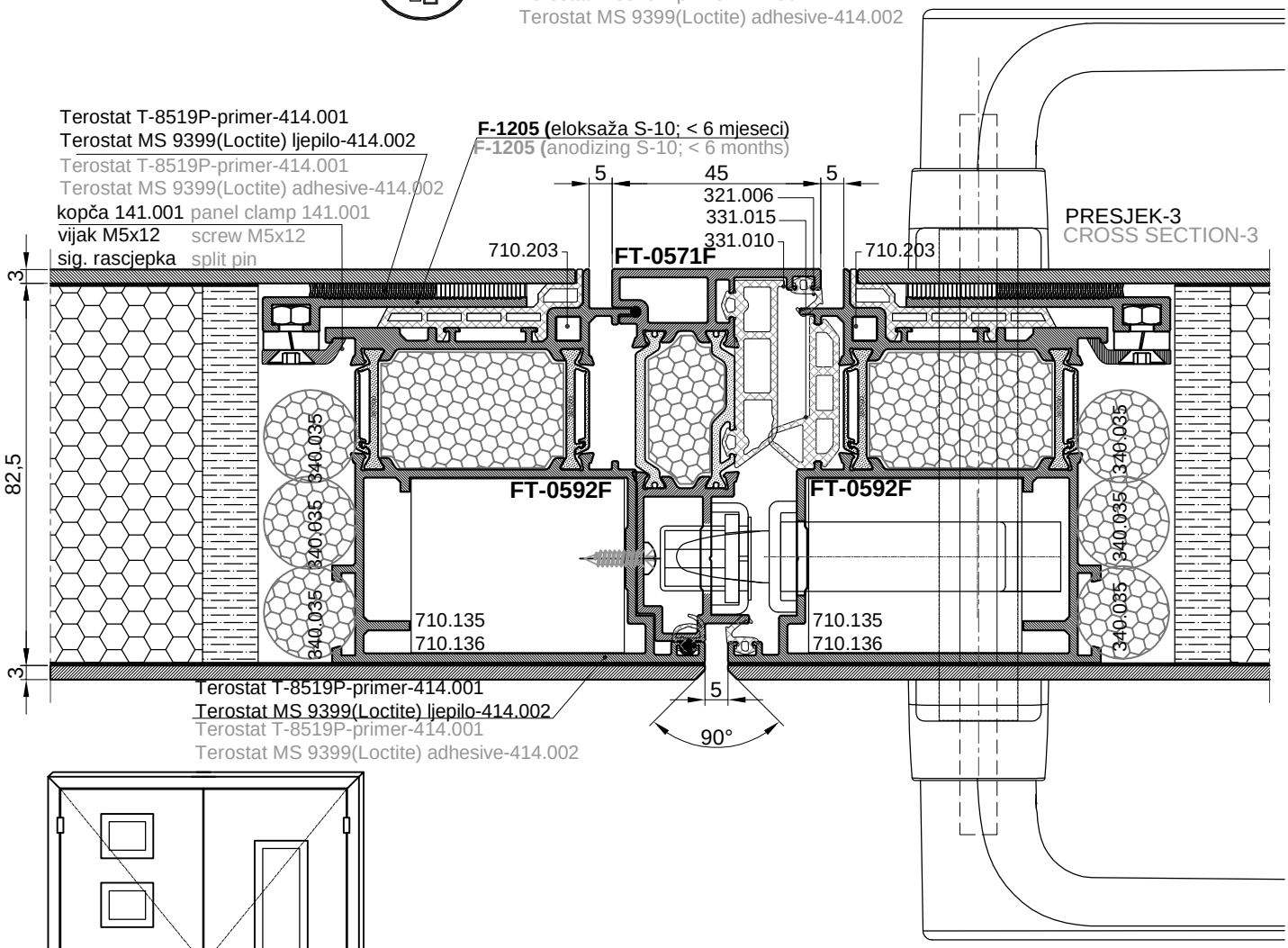

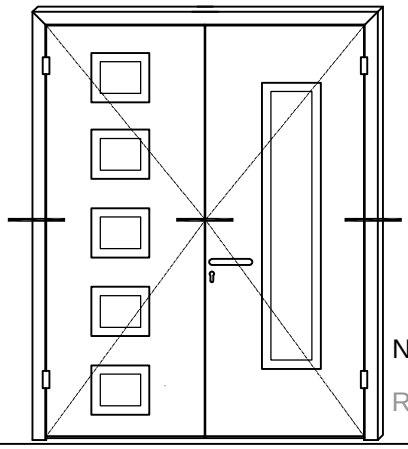

NAPOMENA: KRILO FT-0592F ZA BRAVU 45-icu
RAM FT-0556F (ravna linija unutarnjeg lima)

REMARK: SASH FT-0592F FOR LOCK -BACKSET 45
FRAME FT-0556F (flat line inside sheet)

PRESJEK-4
CROSS SECTION-4

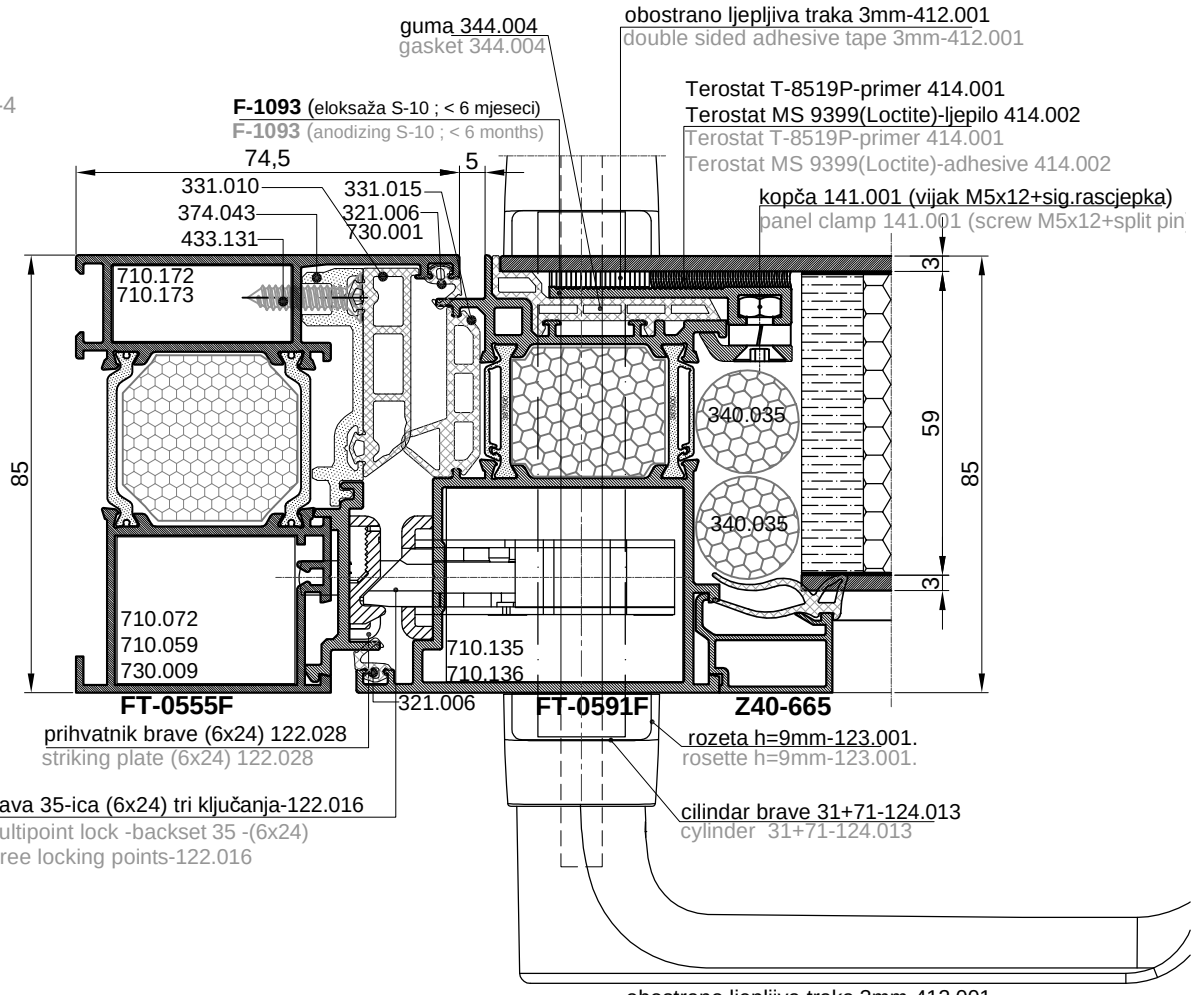

PRESJEK-4
CROSS SECTION-4

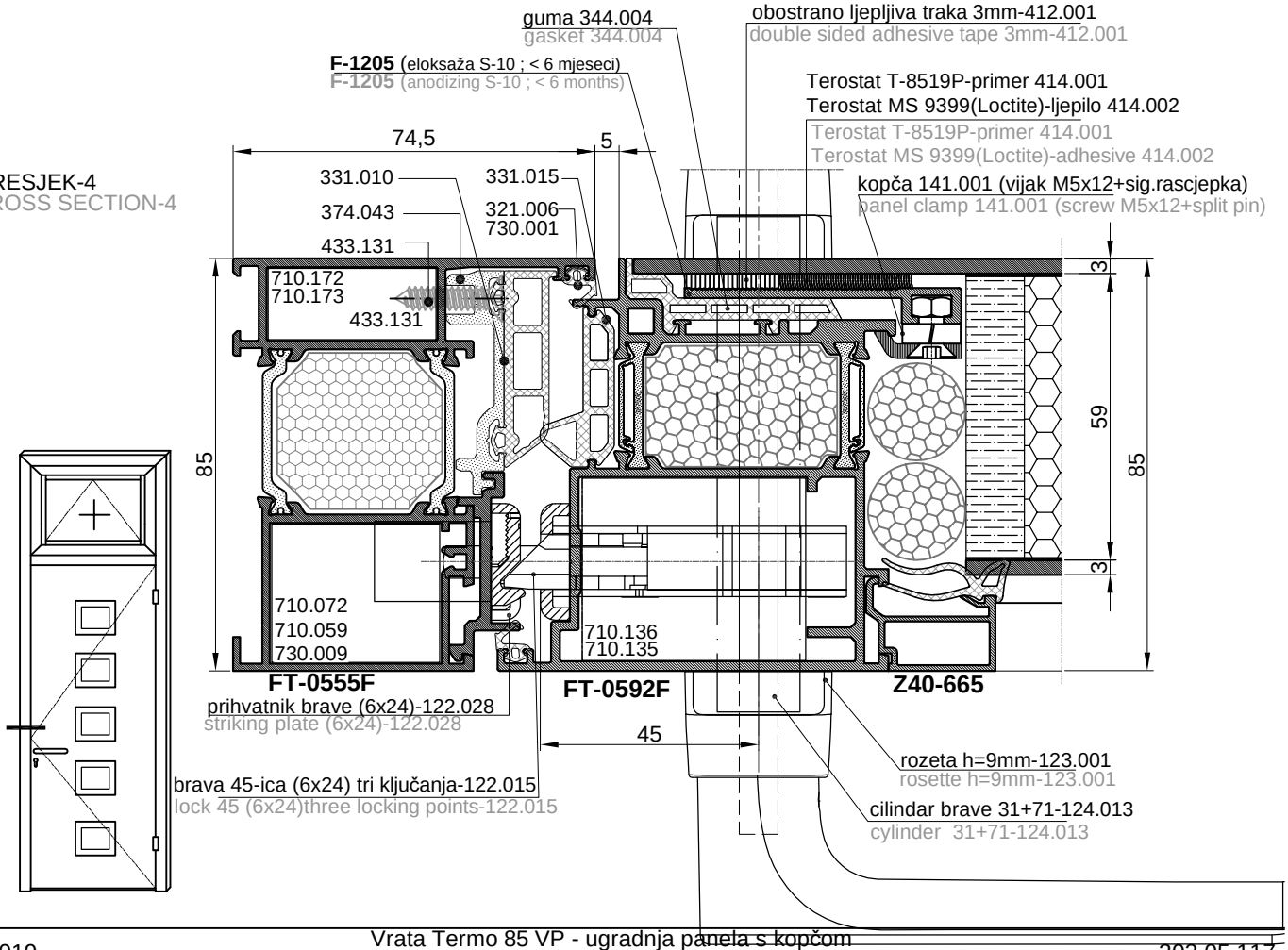

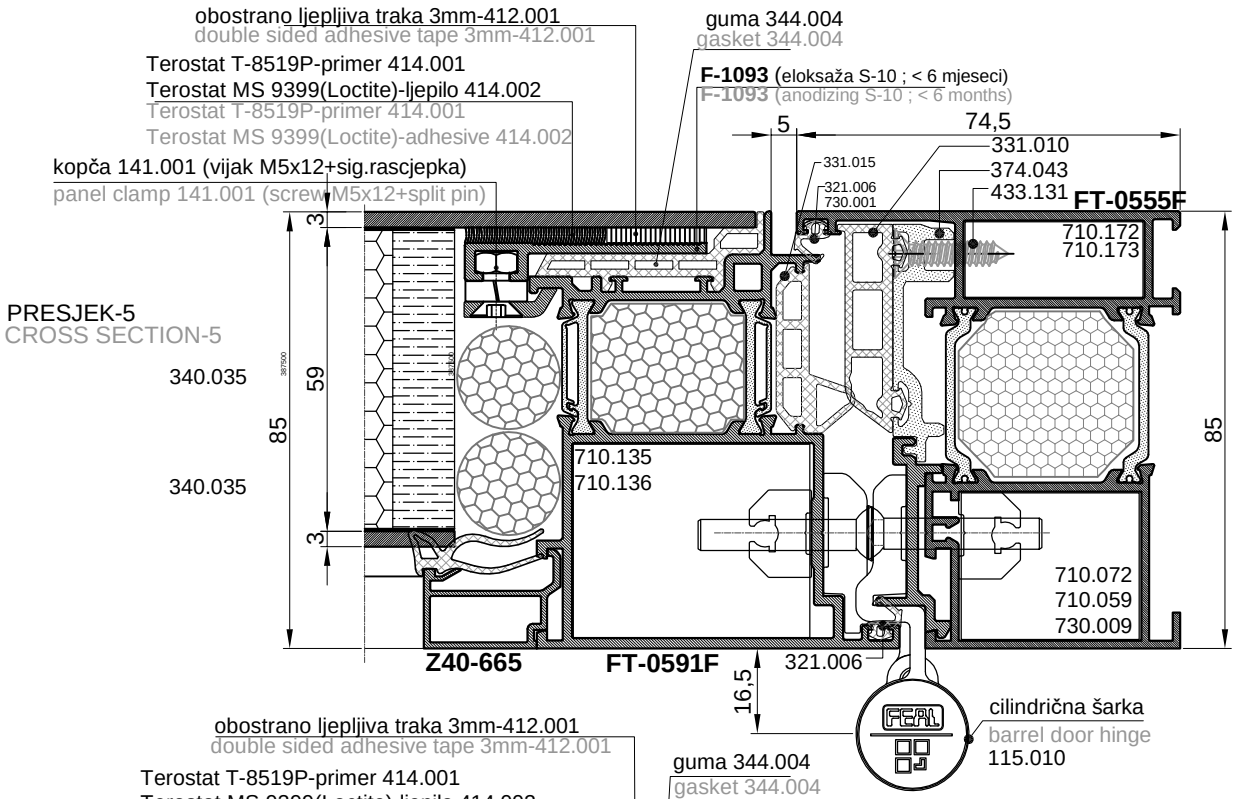
obostrano ljepljiva traka 3mm-412.001
double sided adhesive tape 3mm-412.001
Terostat T-8519P-primer 414.001
Terostat MS 9399(Loctite)-ljepilo 414.002
Terostat T-8519P-primer 414.001
Terostat MS 9399(Loctite)-adhesive 414.002
kopča 141.001 (vijak M5x12+sig.rascjepka)
panel clamp 141.001 (screw M5x12+split pin)
guma 344.004
gasket 344.004
F-1093 (eloksaža S-10 ; < 6 mjeseci)
F-1093 (anodizing S-10 ; < 6 months)
5
74,5
331.010
374.043
433.131
331.015
321.006
730.001
FT-0555F
710.172
710.173
PRESJEK-5
CROSS SECTION-5
340.035
340.035
3
59
85
3
85
710.135
710.136
710.072
710.059
730.009
Z40-665
FT-0591F
321.006
16,5
cilindrična šarka
barrel door hinge
115.010

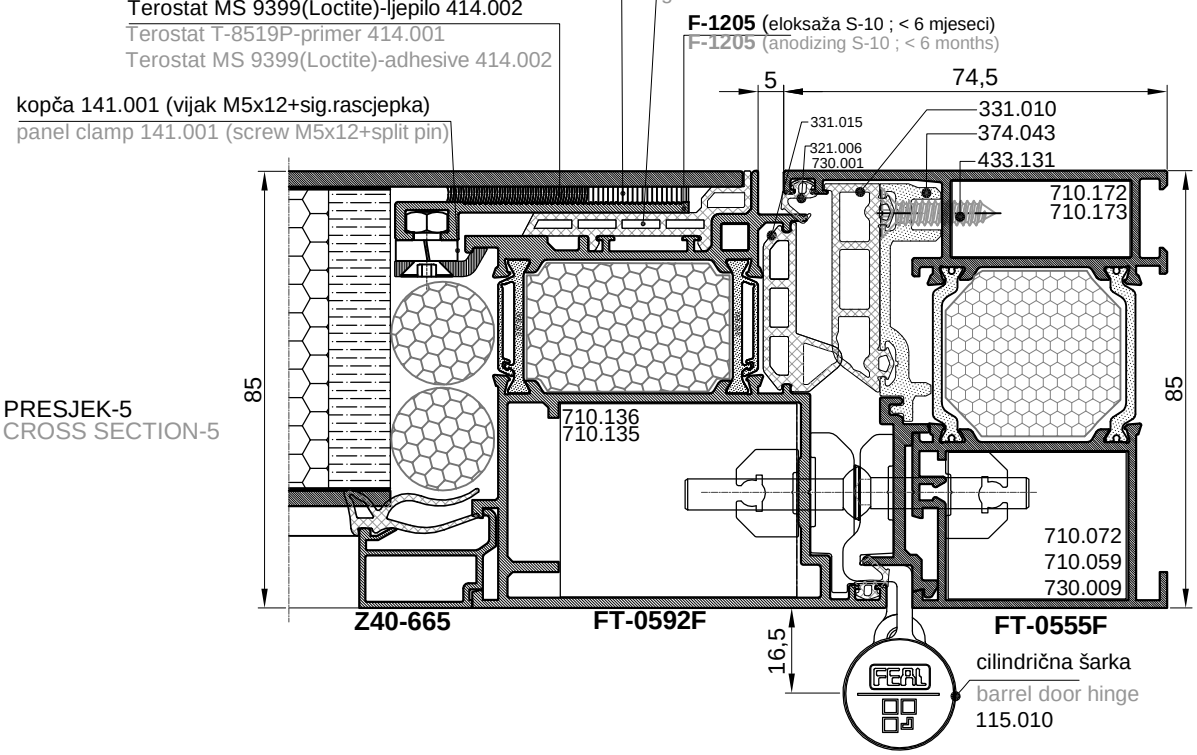
obostrano ljepljiva traka 3mm-412.001
double sided adhesive tape 3mm-412.001
Terostat T-8519P-primer 414.001
Terostat MS 9399(Loctite)-ljepilo 414.002
Terostat T-8519P-primer 414.001
Terostat MS 9399(Loctite)-adhesive 414.002
kopča 141.001 (vijak M5x12+sig.rascjepka)
panel clamp 141.001 (screw M5x12+split pin)
guma 344.004
gasket 344.004
F-1205 (eloksaža S-10 ; < 6 mjeseci)
F-1205 (anodizing S-10 ; < 6 months)
5
74,5
331.010
374.043
433.131
331.015
321.006
730.001
710.172
710.173
PRESJEK-5
CROSS SECTION-5
85
85
710.136
710.135
710.072
710.059
730.009
Z40-665
FT-0592F
FT-0555F
16,5
cilindrična šarka
barrel door hinge
115.010

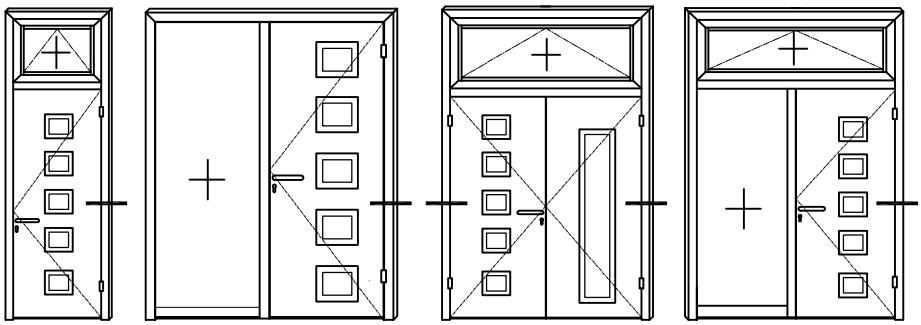

PRESJEK-6
CROSS SECTION-6

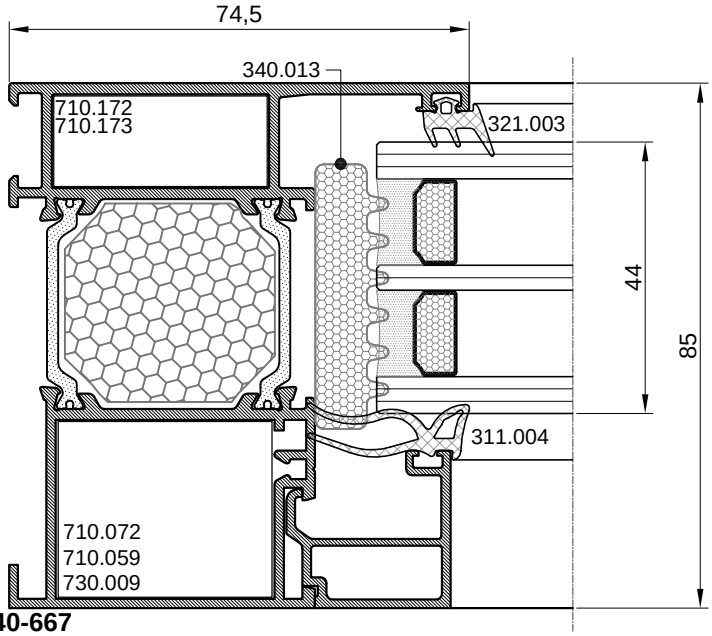

FT-0555F **Z40-667**

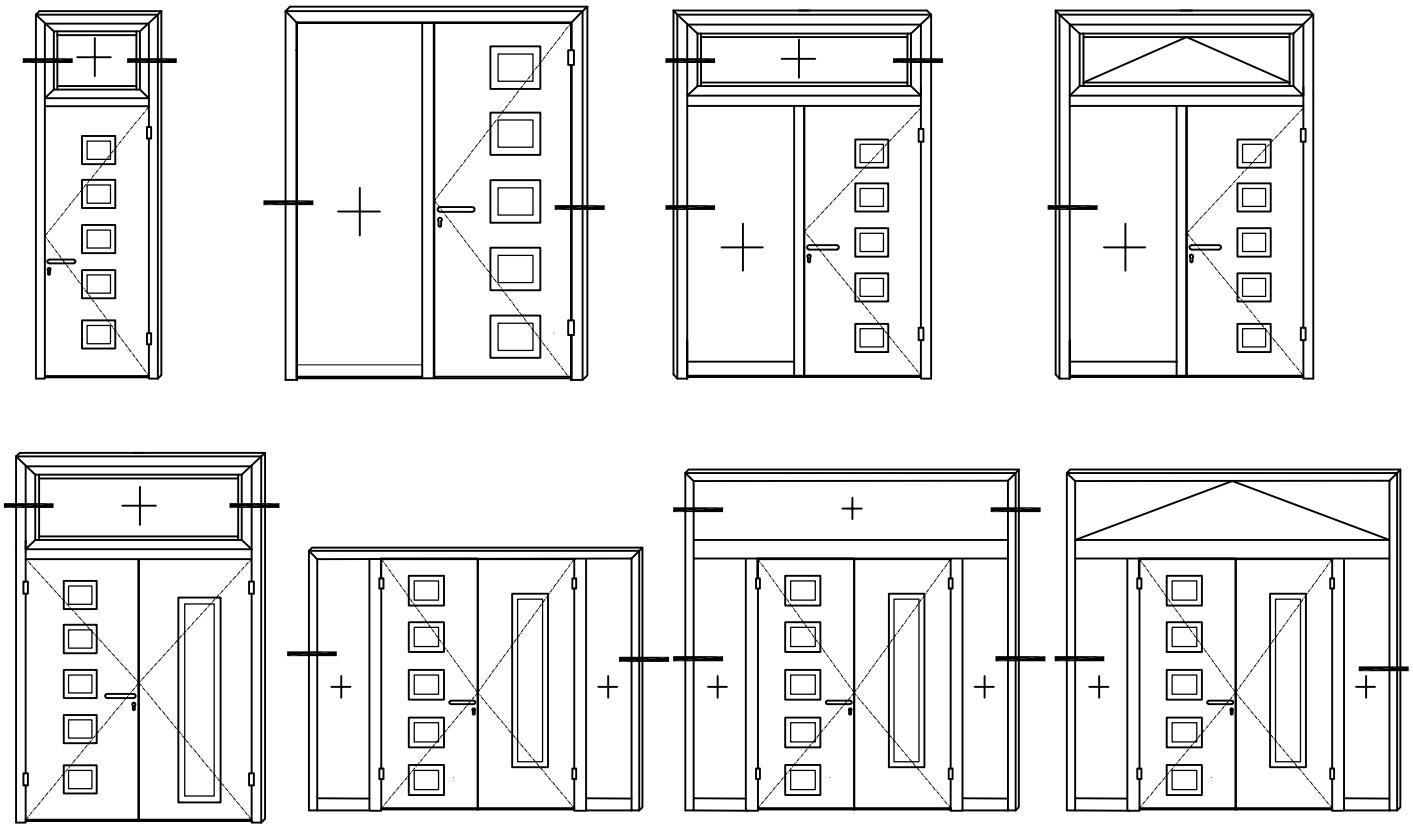

PRESJEK-6A
CROSS SECTION-6A

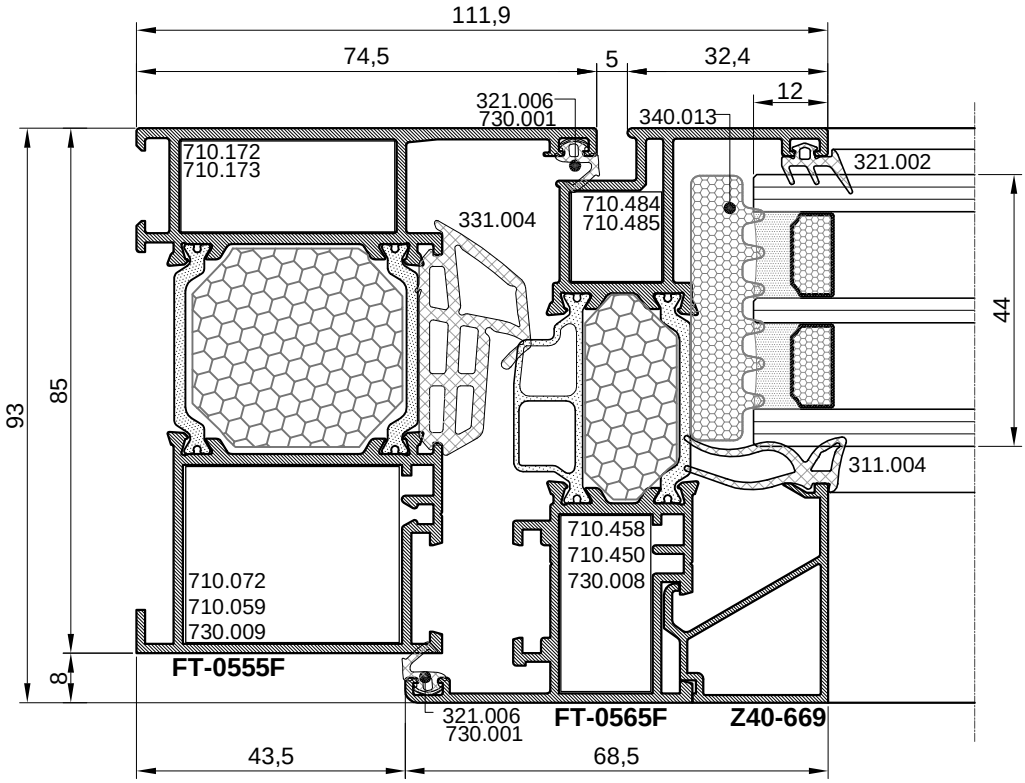

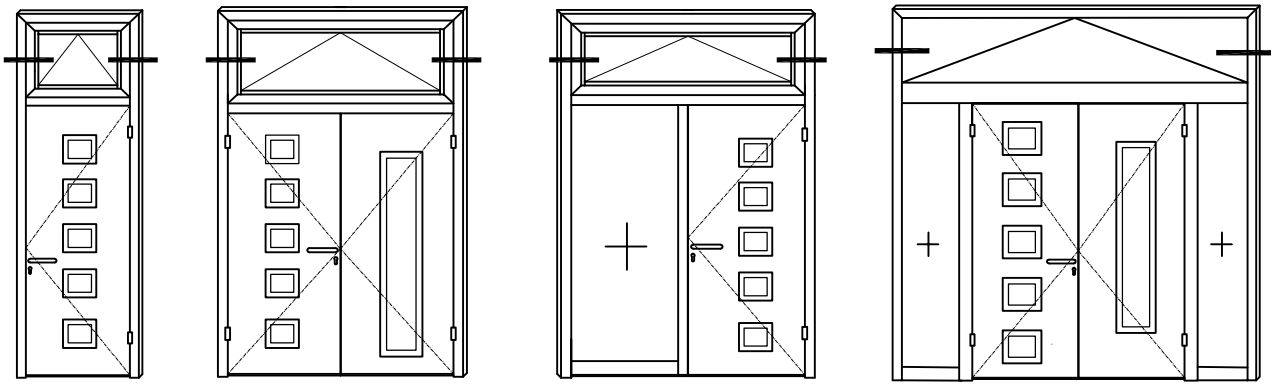

PRESJEK-7
CROSS SECTION -7

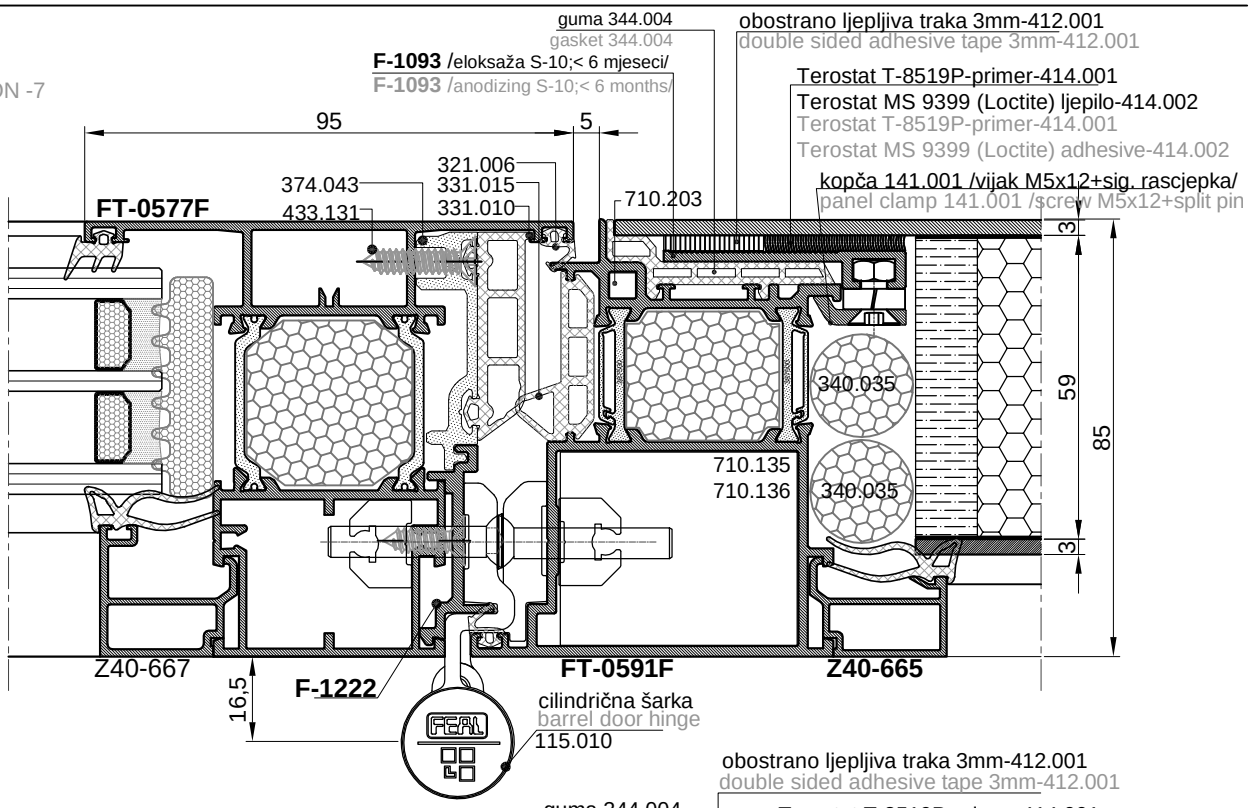

PRESJEK-7
CROSS SECTION-7

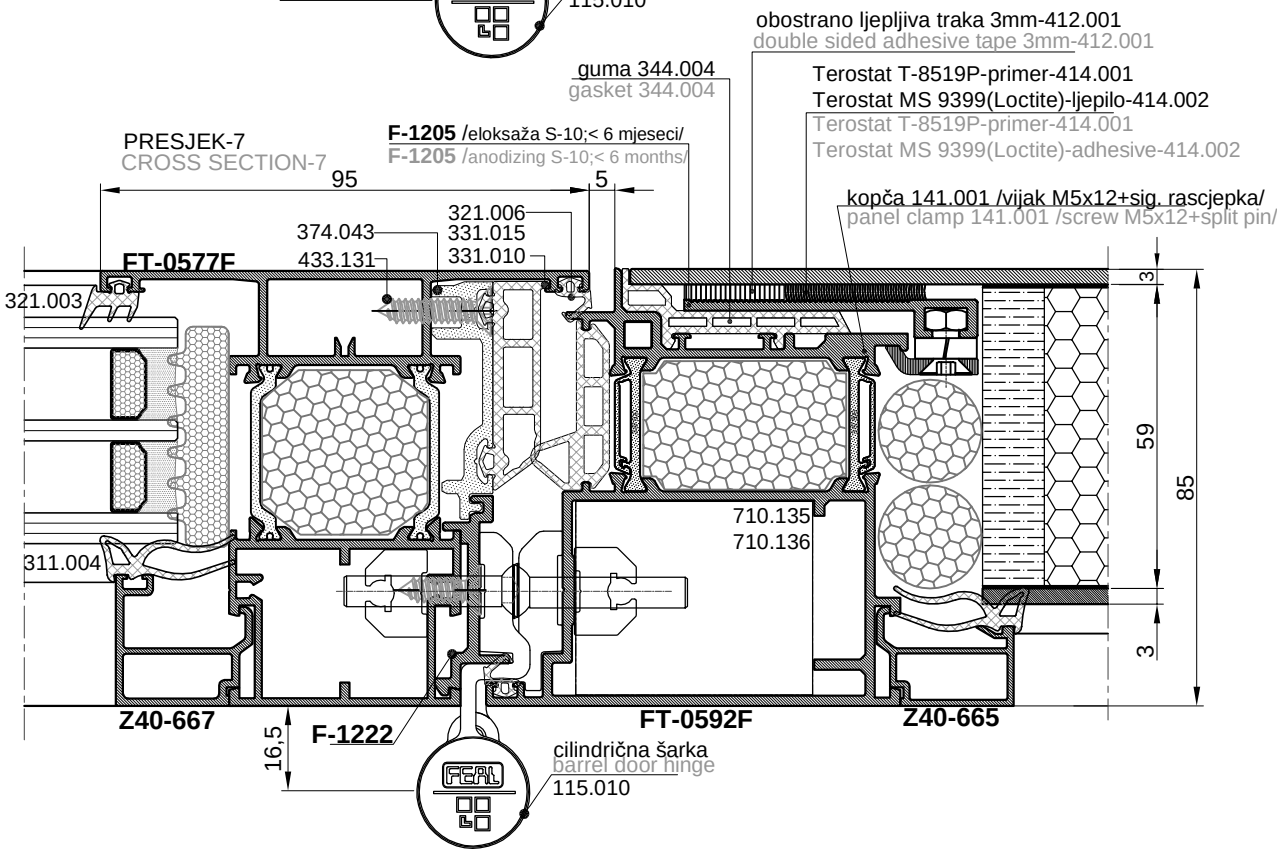

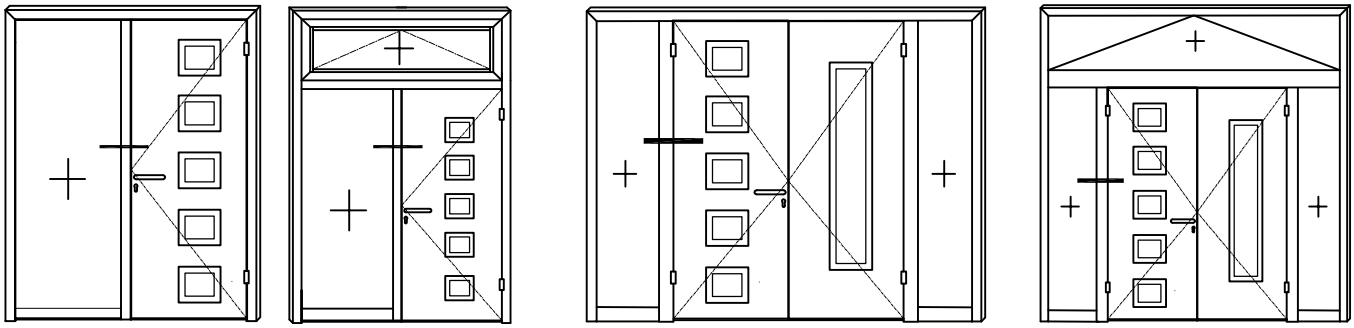

PRESJEK-8
CROSS SECTION-8

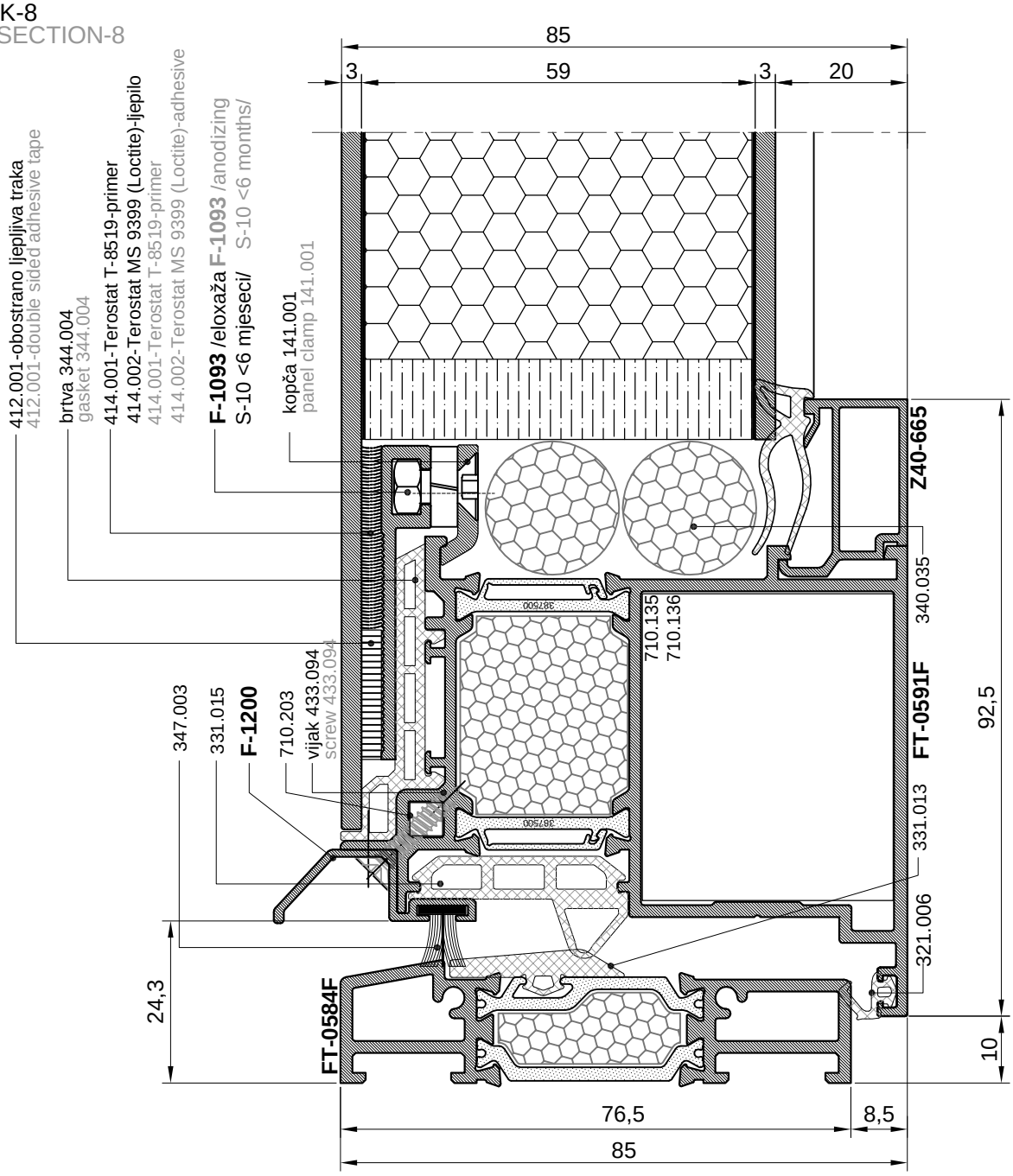

NAPOMENA: KRILO FT-0591F ZA BRAVU 35-icu
REMARK: SASH FT-0591F FOR LOCK -BACKSET 35

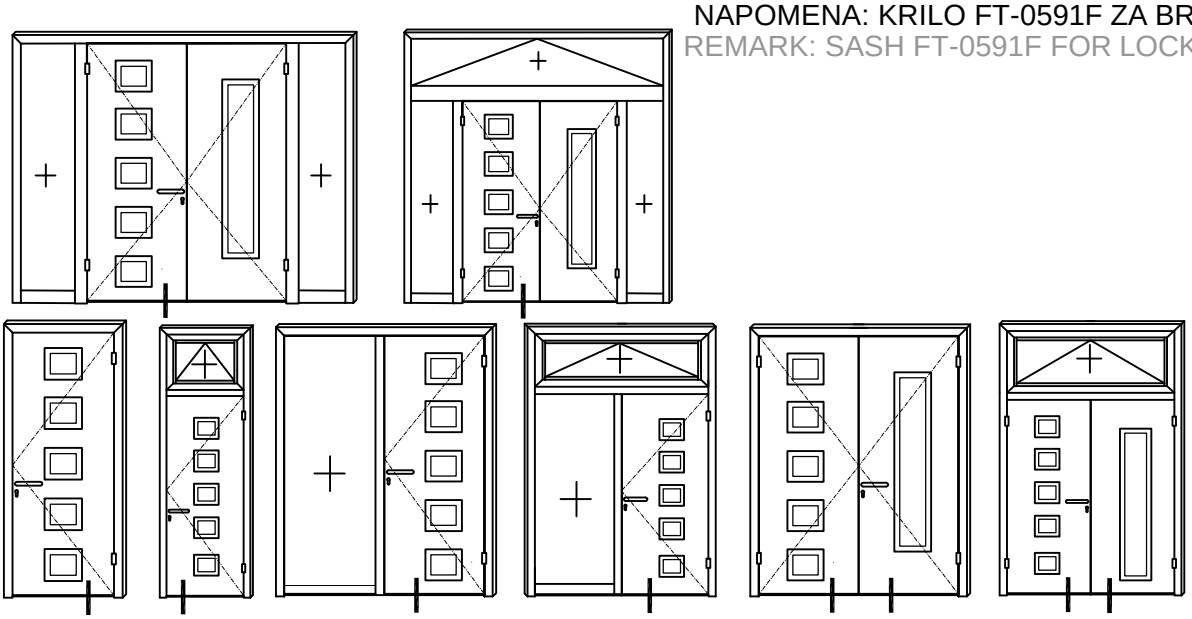

PRESJEK-8
CROSS SECTION-8

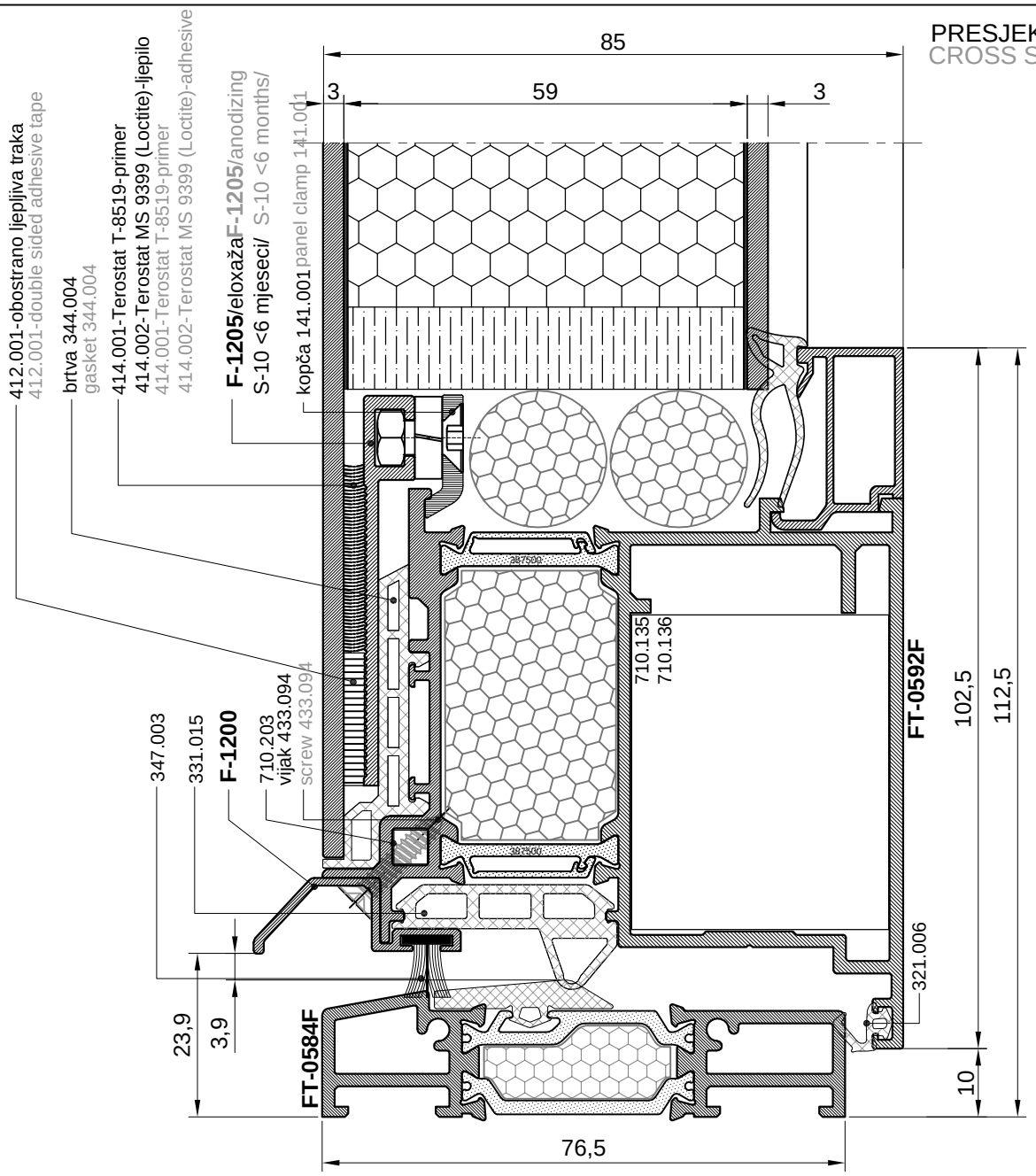

NAPOMENA: KRILO FT-0592F ZA BRAVU 45-icu
REMARK: SASH FT-0592F FOR LOCK -BACKSET 45

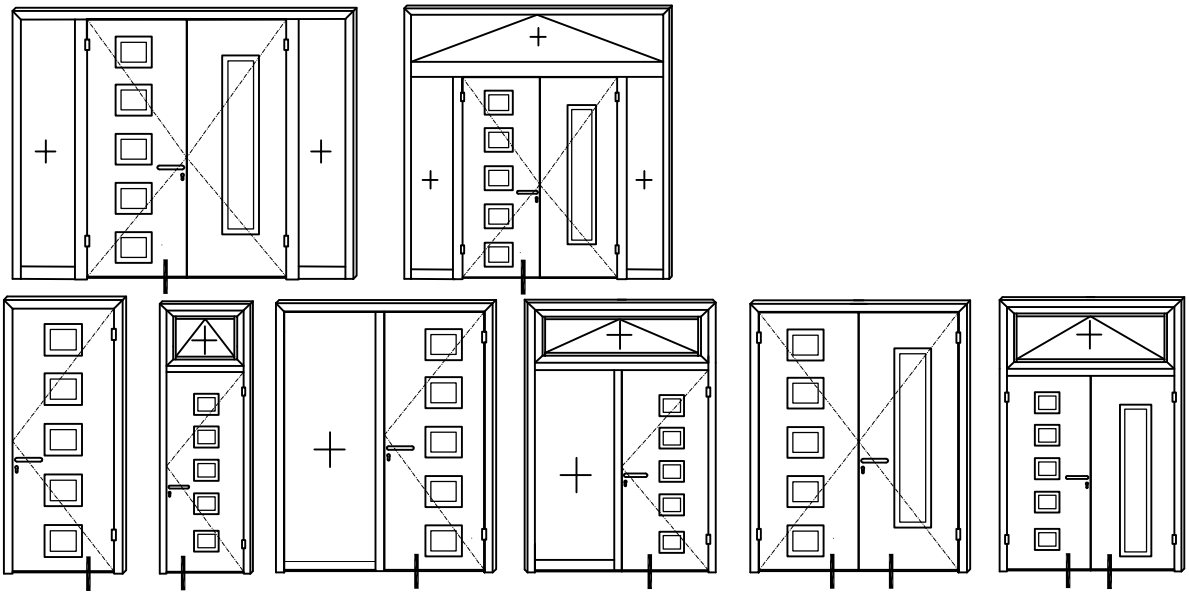

PRESJEK-8
CROSS SECTION-8

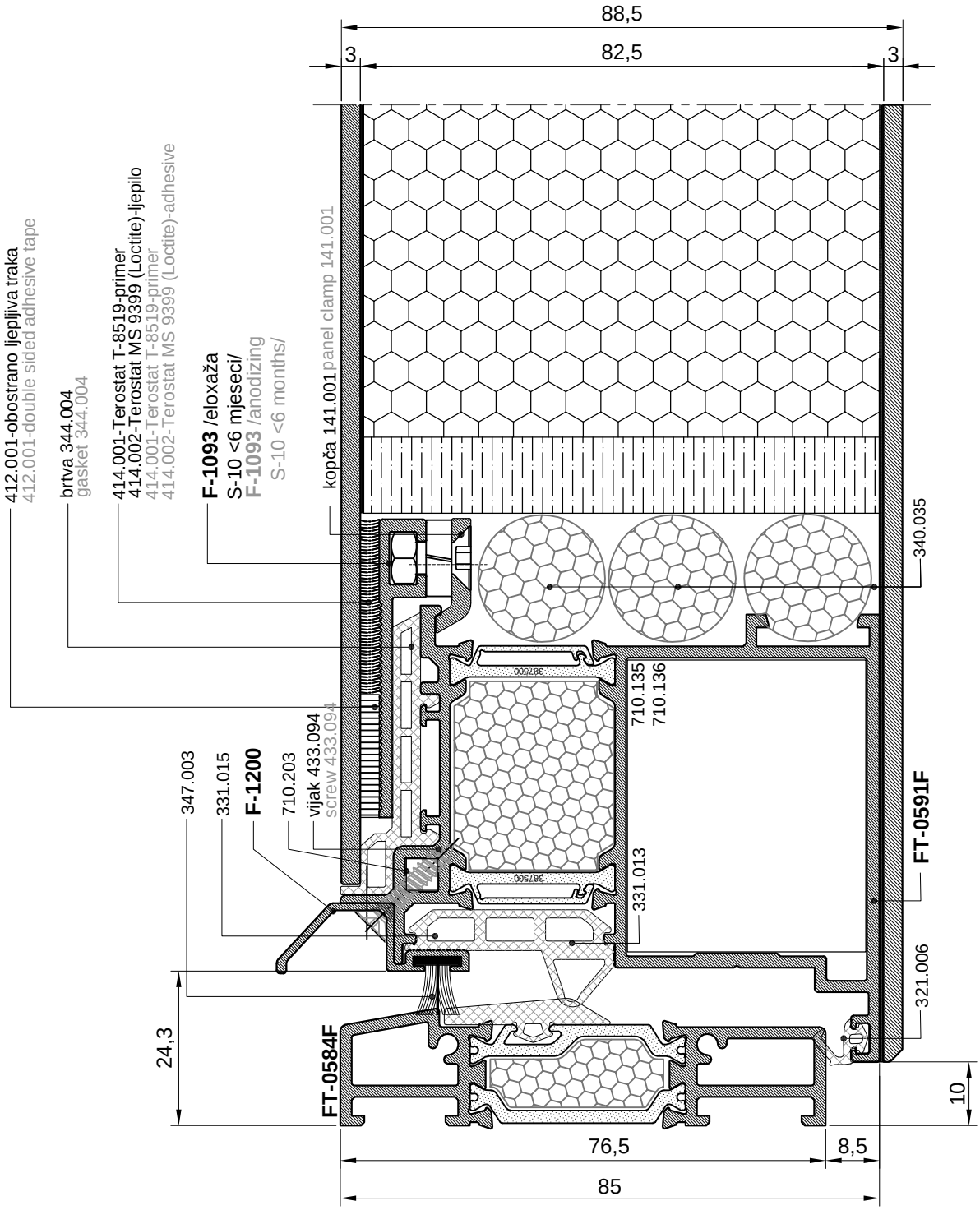

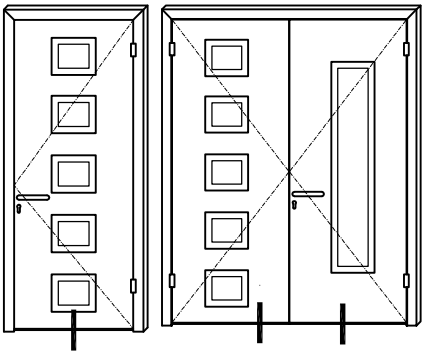

NAPOMENA: KRILO FT-0591 F ZA BRAVU 35-icu
RAM FT-0556 F (ravna linija unutarnjeg lima)
REMARK: SASH FT-0591 F FOR LOCK - BACKSET 35
FRAME FT-0556 F (flat line inside sheet)

PRESJEK-8
CROSS SECTION-8

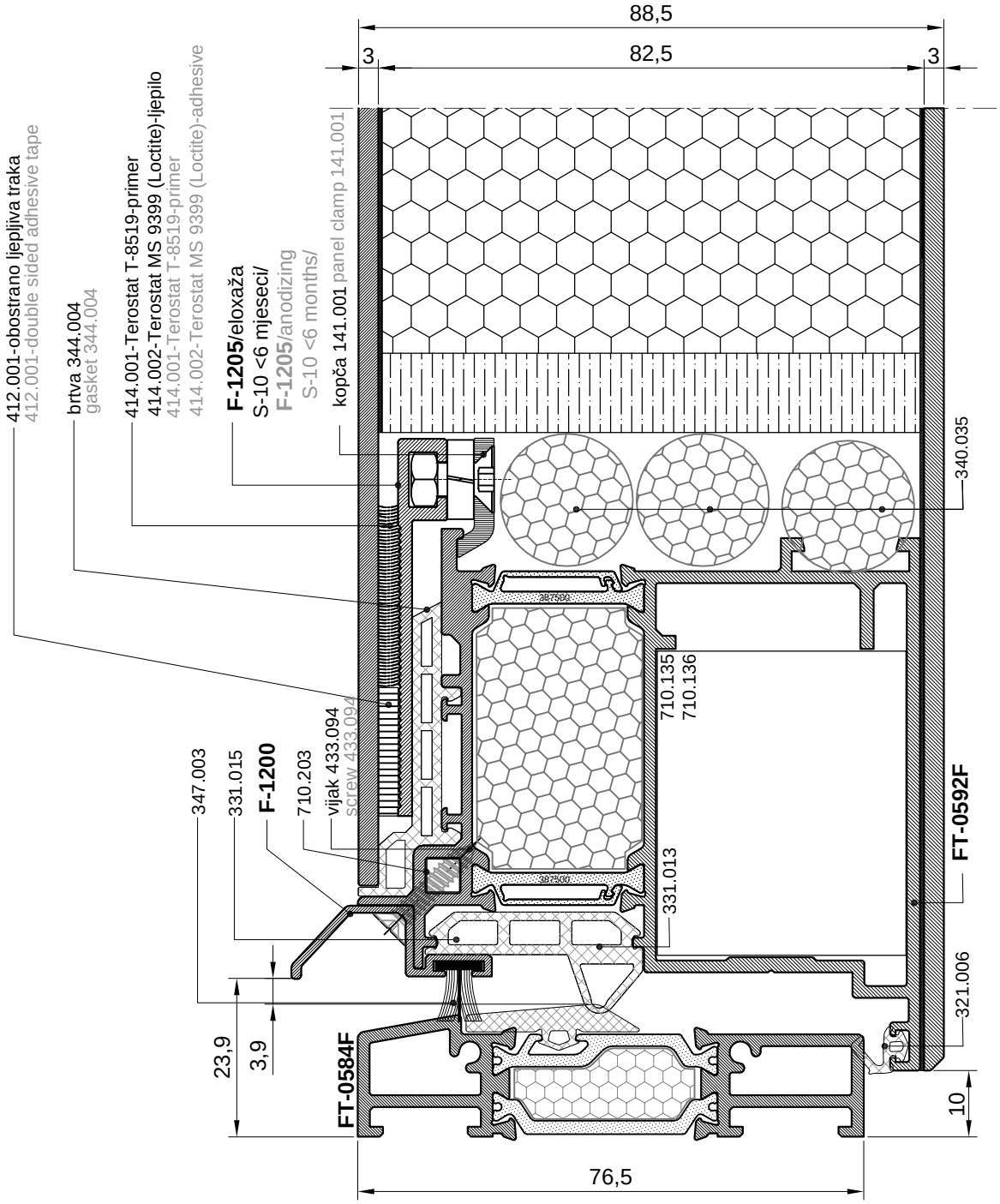

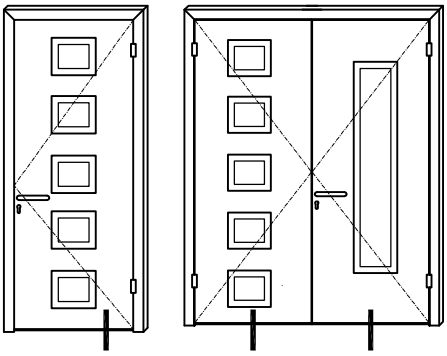

NAPOMENA: KRILO FT-0592F ZA BRAVU 45-icu
RAM FT-0556F (ravna linija unutarnjeg lima)

REMARK: SASH FT-0592F FOR LOCK - BACKSET45
FRAME FT-0556F (flat line inside sheet)

PRESJEK-9
CROSS SECTION-9

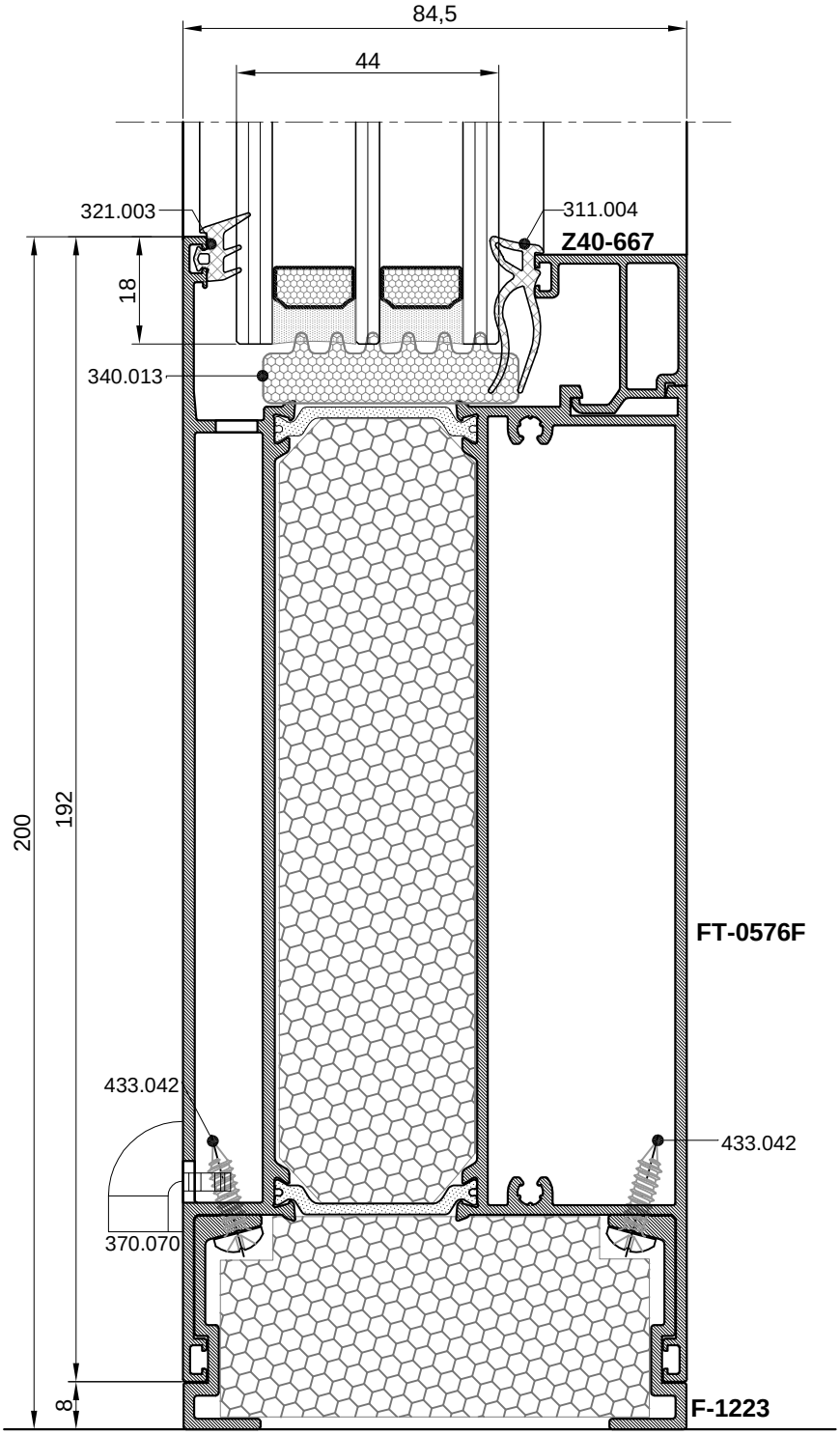

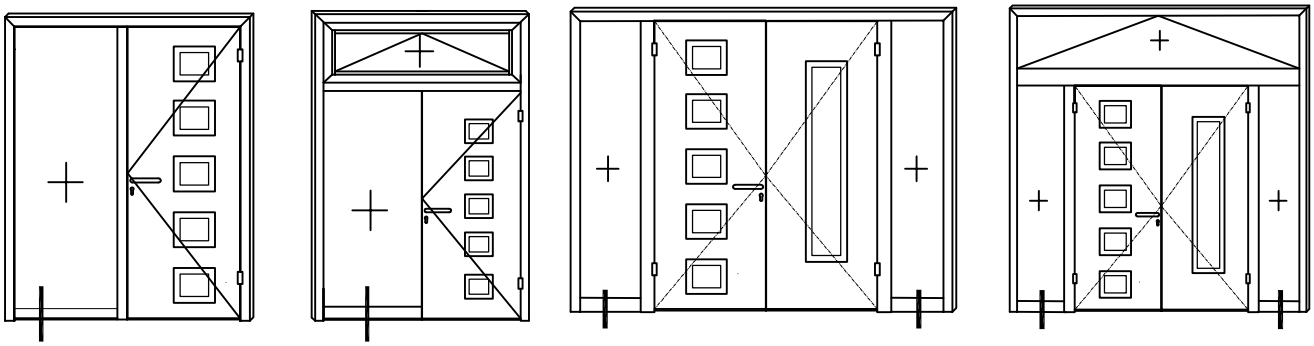

PRESJEK-9A
CROSS SECTION-9A

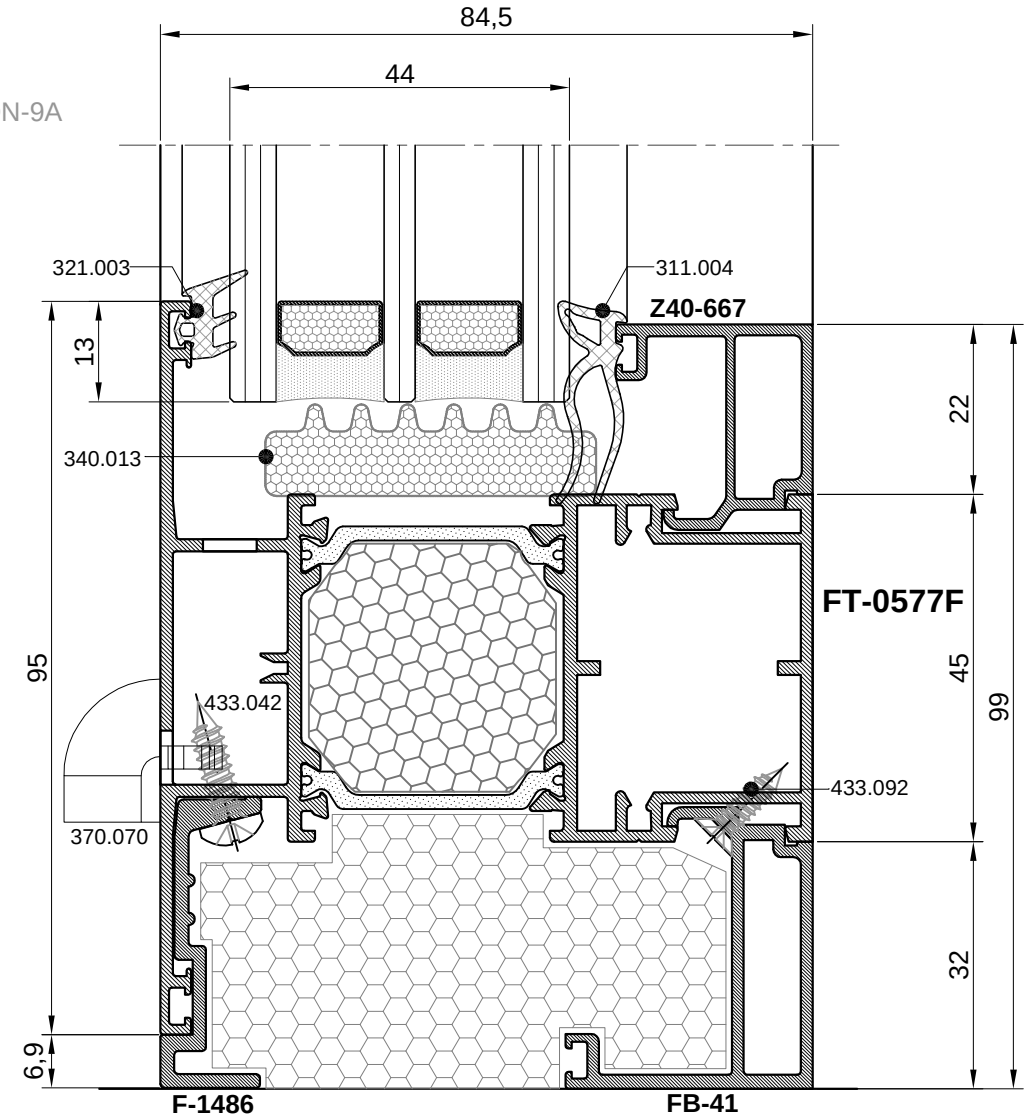

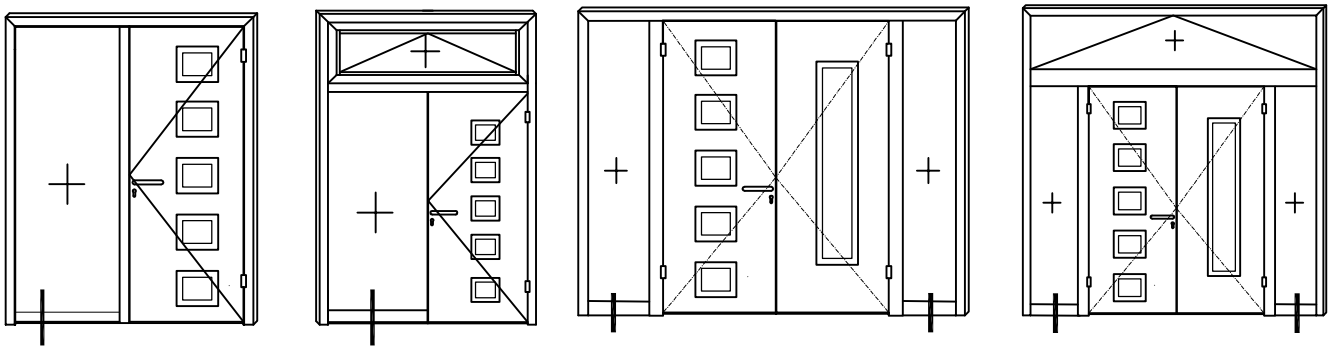

PRESJEK-10
CROSS SECTION-10

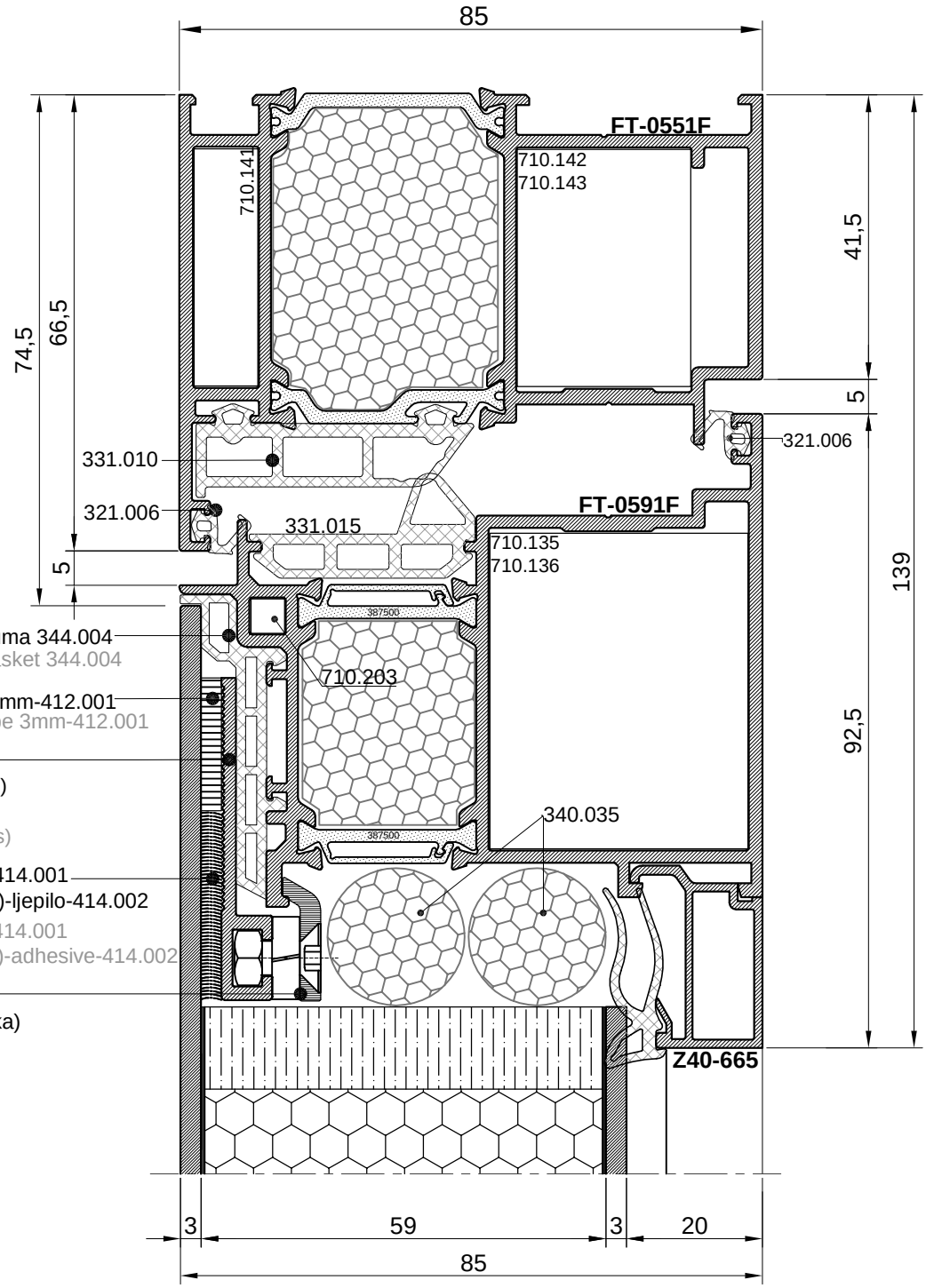

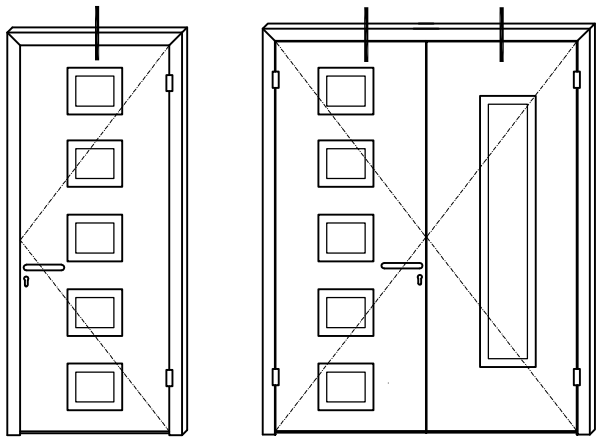

NAPOMENA: KRILO FT-0591F ZA BRAVU 35-icu
REMARK: SASH FT-0591F FOR LOCK BACKSET 35

PRESJEK-10
CROSS SECTION-10

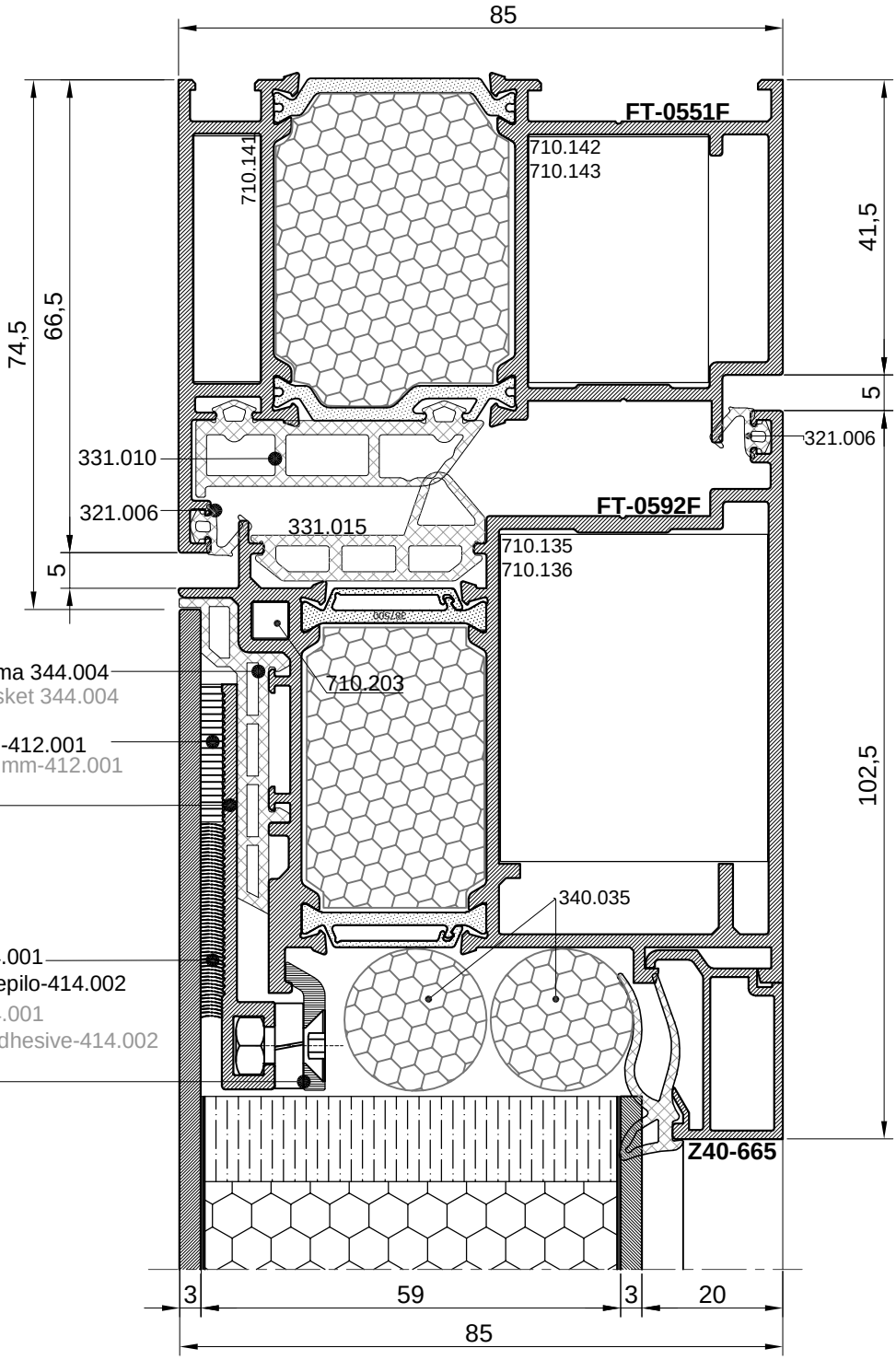

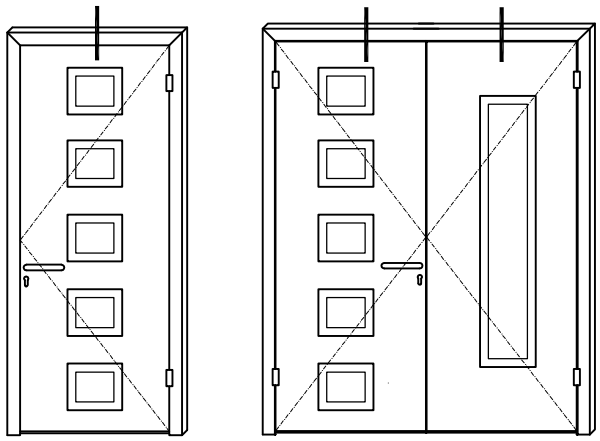

NAPOMENA: KRILO FT-0592F ZA BRAVU 45-icu
REMARK: SASH FT-0592F FOR LOCK- BACKSET 45

PRESJEK-10
CROSS SECTION-10

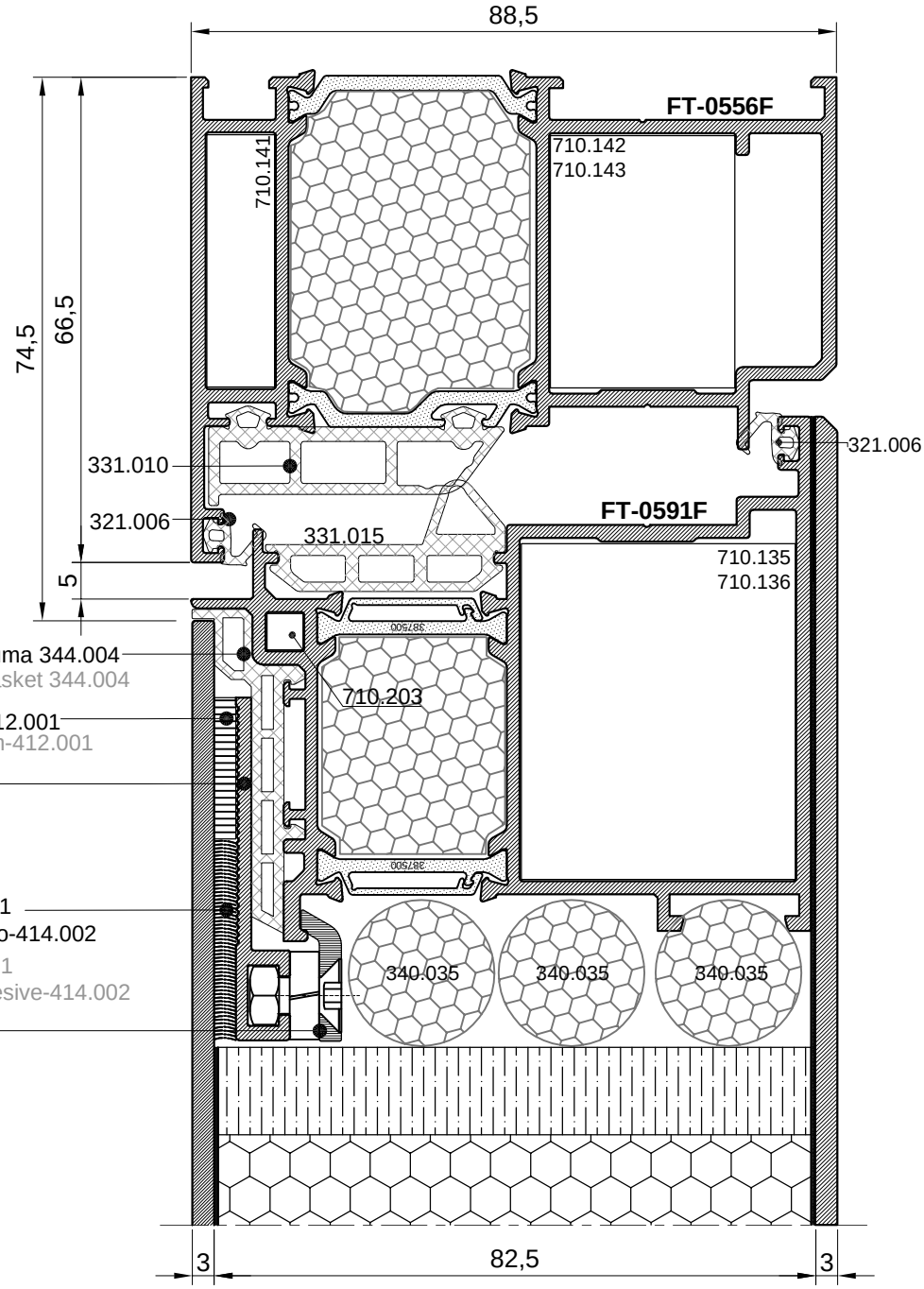

obostrano ljepljiva traka 3mm-412.001
double sided adhesive tape 3mm-412.001

F-1093
(eloksaža S-10; < 6 mjeseci)
F-1093
(anodizing S-10; < 6 months)

Terostat T-8519P-primer-414.001
Terostat MS 9399 (Loctite)-ljepilo-414.002
Terostat T-8519P-primer-414.001
Terostat MS 9399 (Loctite)-adhesive-414.002

kopča 141.001
(vijak M5x12+sig. rascjepka)
panel clamp 141.001
(screw M5x12+split pin)

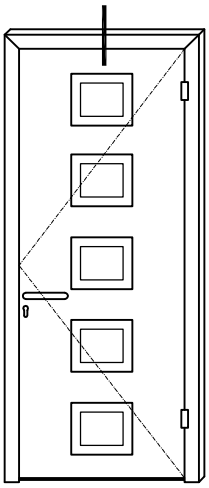

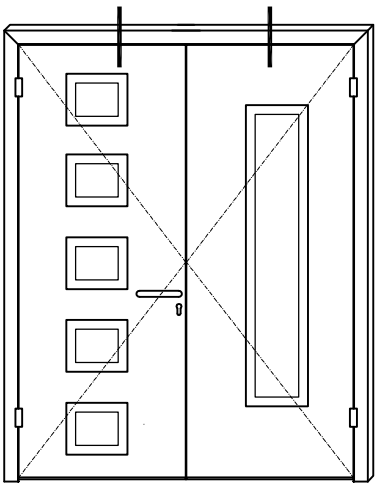

NAPOMENA: KRILO FT-0591F ZA BRAVU 35-icu
RAM FT-0556F (ravna linija unutarnjeg lima)
REMARK: SASH FT-0591F FOR LOCK - BACKSET 35
FRAME FT-0556F (flat line inside sheet)

PRESJEK-10
CROSS SECTION-10

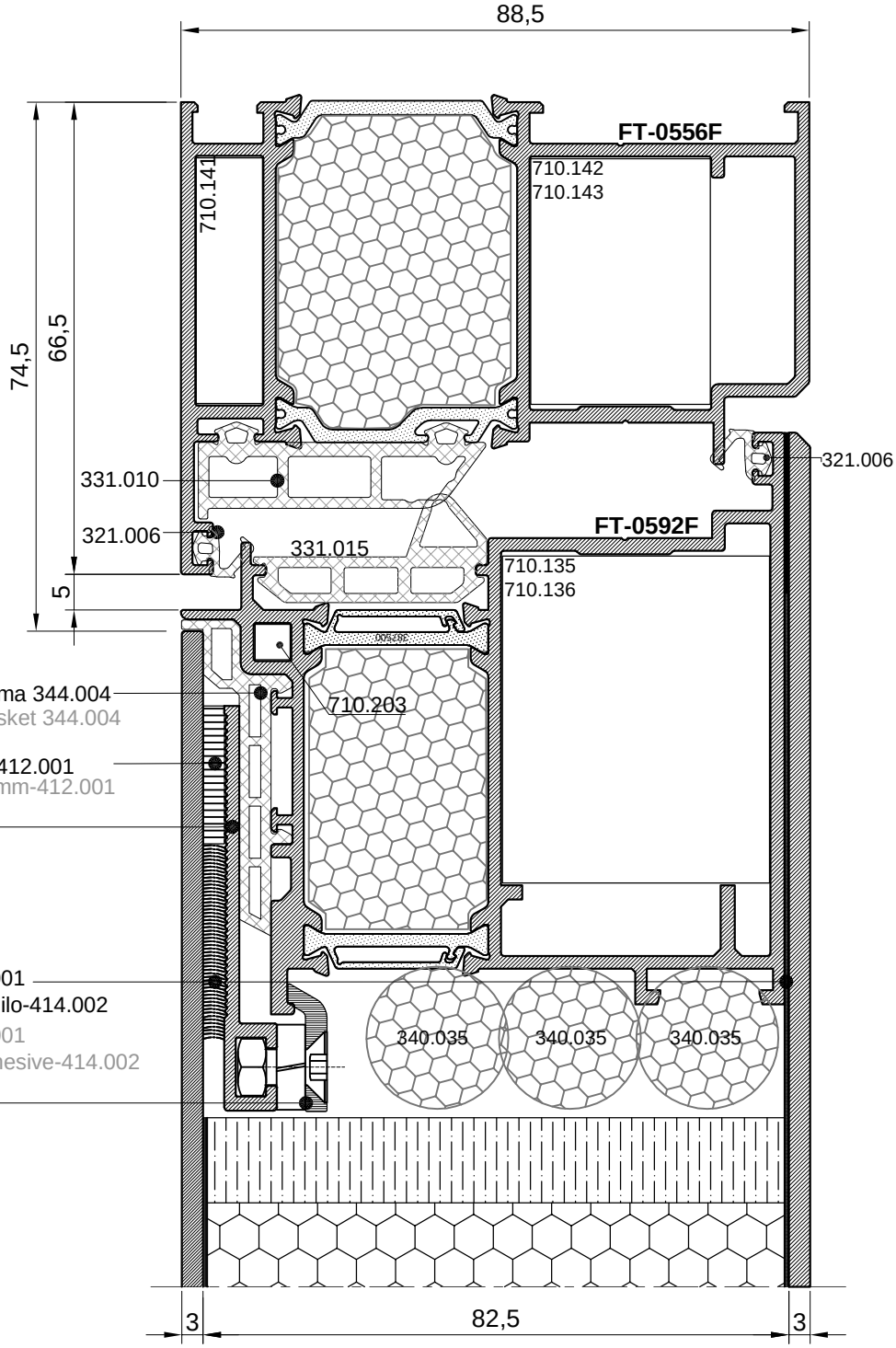

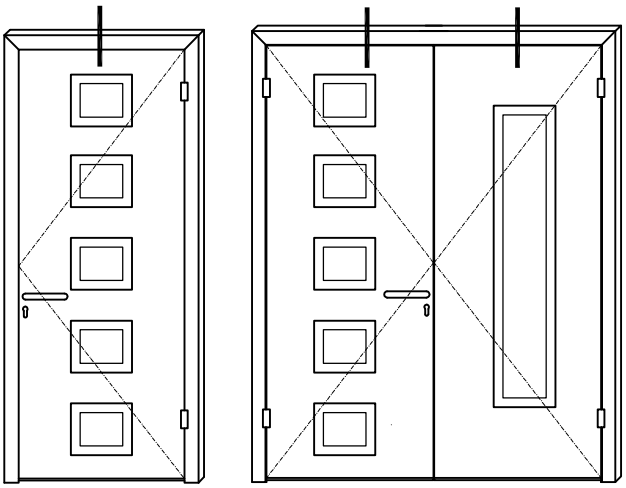

NAPOMENA: KRILO FT-0592F ZA BRAVU 45-icu
RAM FT-0556F (ravna linija unutarnjeg lima)

REMARK: SASH FT-0592F FOR LOCK -BACKSET 45
FRAME FT-0556F (flat line inside sheet)

PRESJEK-11
CROSS SECTION-11

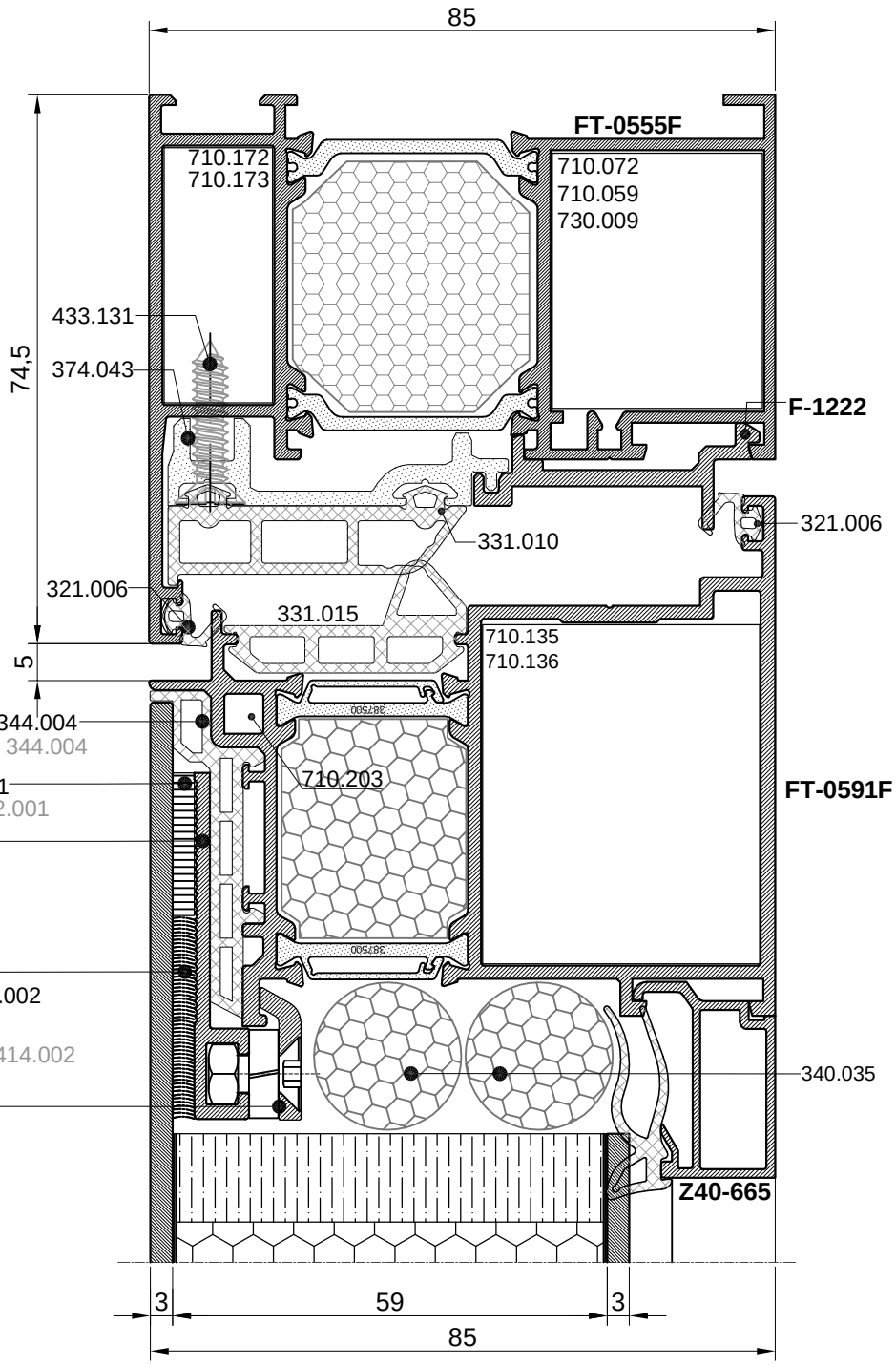

obostrano ljepljiva traka 3mm-412.001
double sided adhesive tape 3mm-412.001

F-1093
(eloksaža S-10; < 6 mjeseci)
F-1093
(anodizing S-10; < 6 months)

Terostat T-8519P-primer-414.001
Terostat MS 9399 (Loctite)-ljepilo-414.002
Terostat T-8519P-primer-414.001
Terostat MS 9399 (Loctite)-adhesive-414.002

kopča 141.001
(vijak M5x12+sig. rascjepka)
panel clamp 141.001
(screw M5x12+split pin)

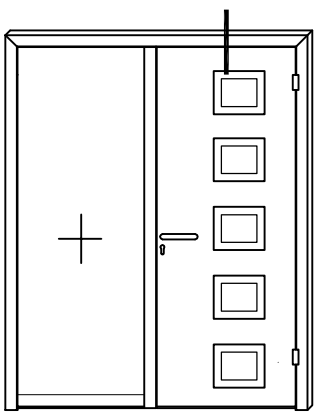

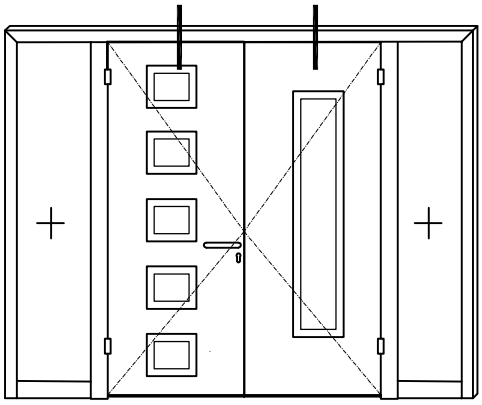

NAPOMENA: KRILO FT-0591F ZA BRAVU 35-icu
REMARK: SASH FT-0591F FOR LOCK - BACKSET 35

PRESJEK-11
CROSS SECTION-11

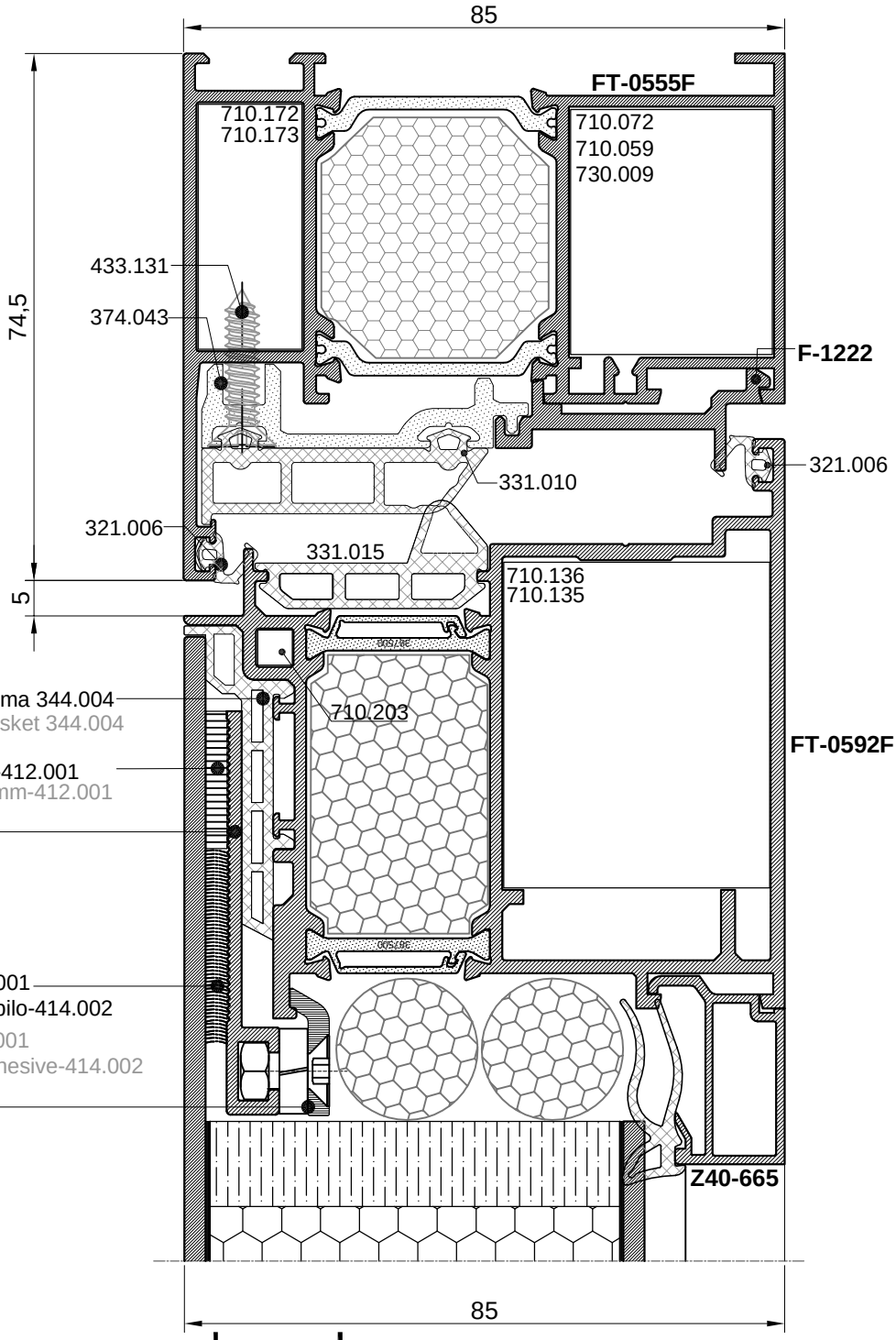

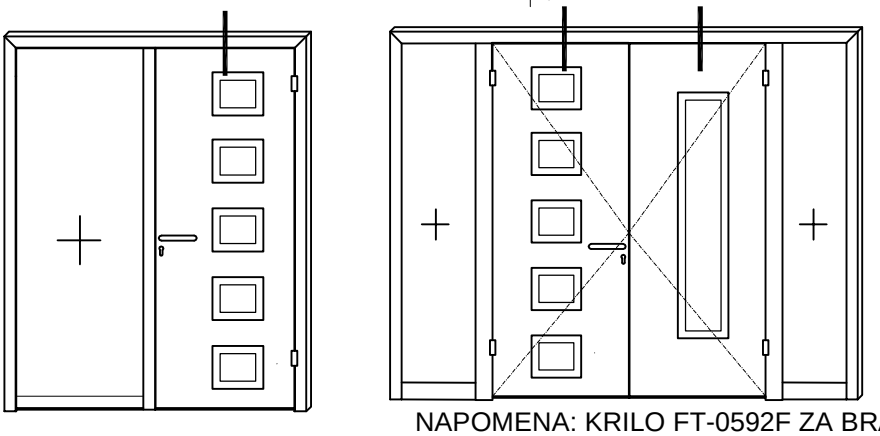

NAPOMENA: KRILO FT-0592F ZA BRAVU 45-icu
REMARK: SASH FT-0592F FOR LOCK - BACKSET 45

PRESJEK-12
CROSS SECTION-12

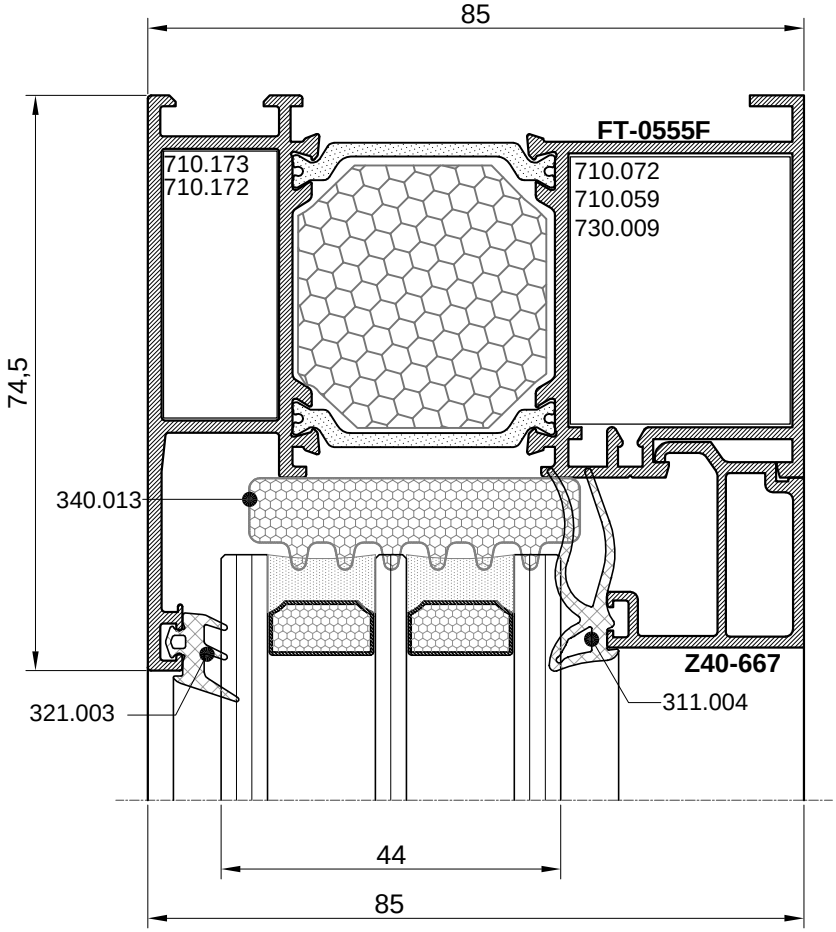

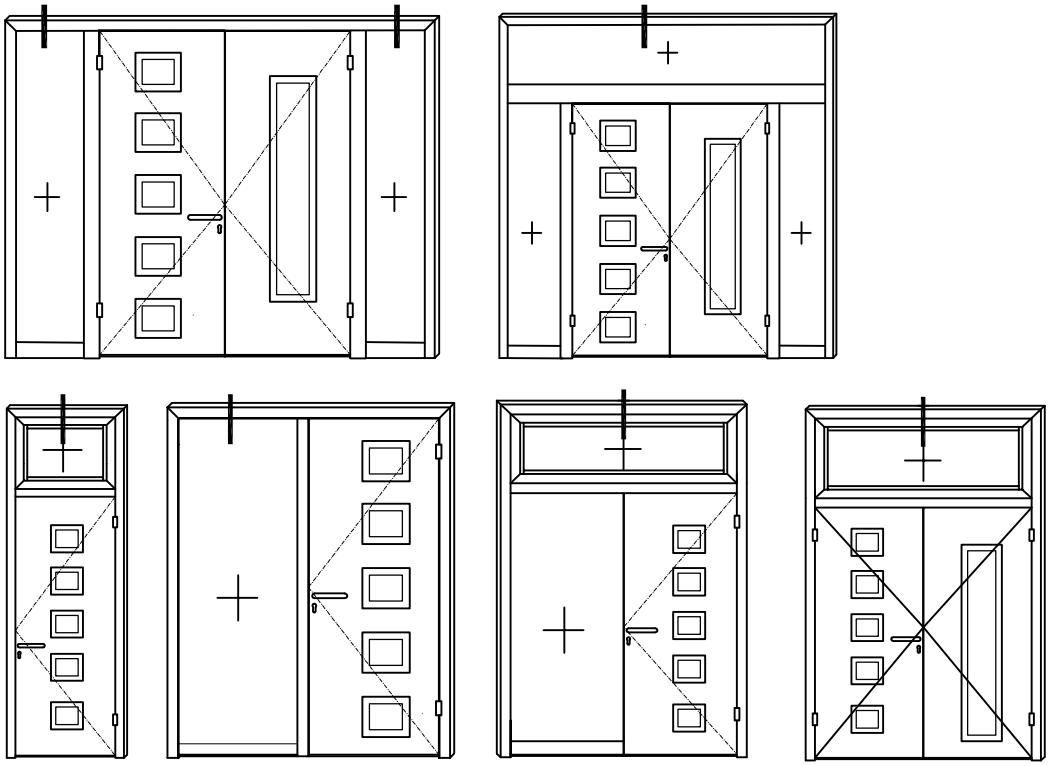

PRESJEK-13
CROSS SECTION-13

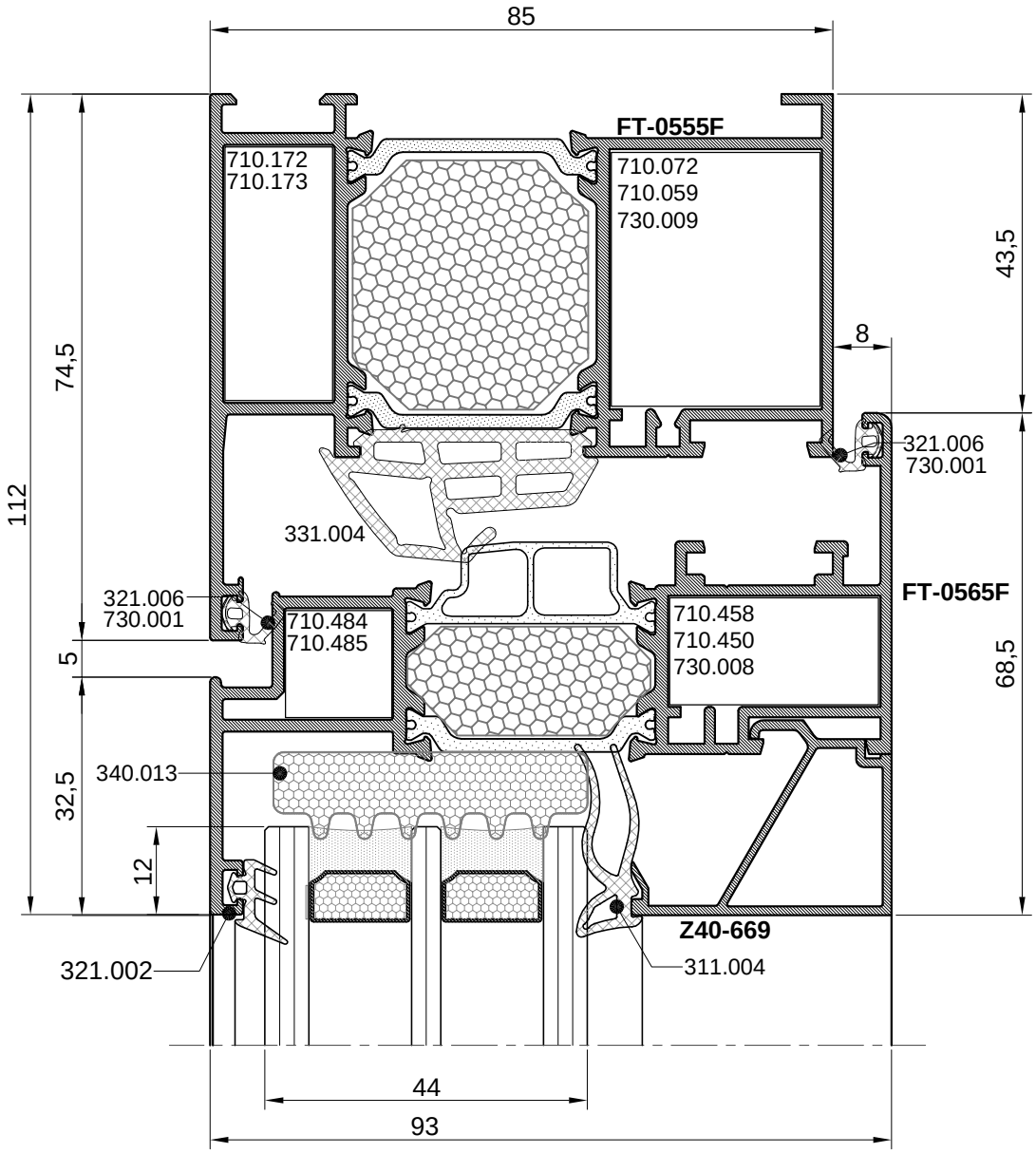

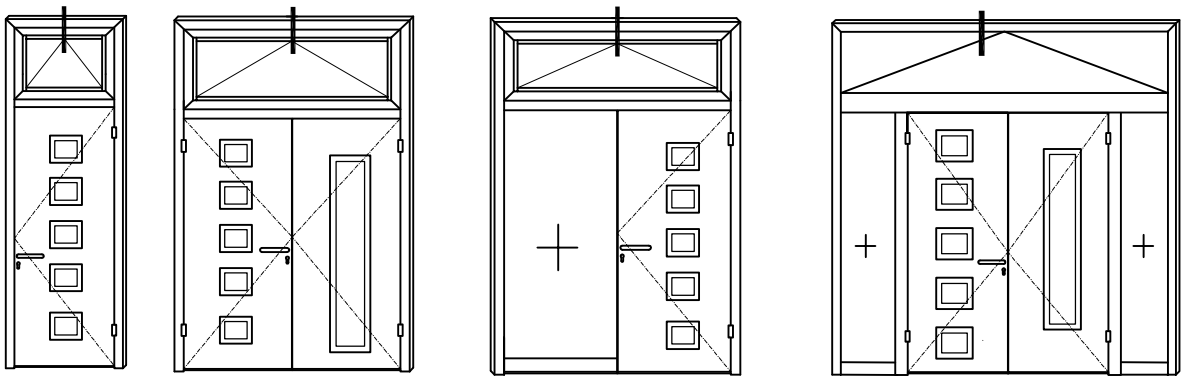

PRESJEK-14
CROSS SECTION-14

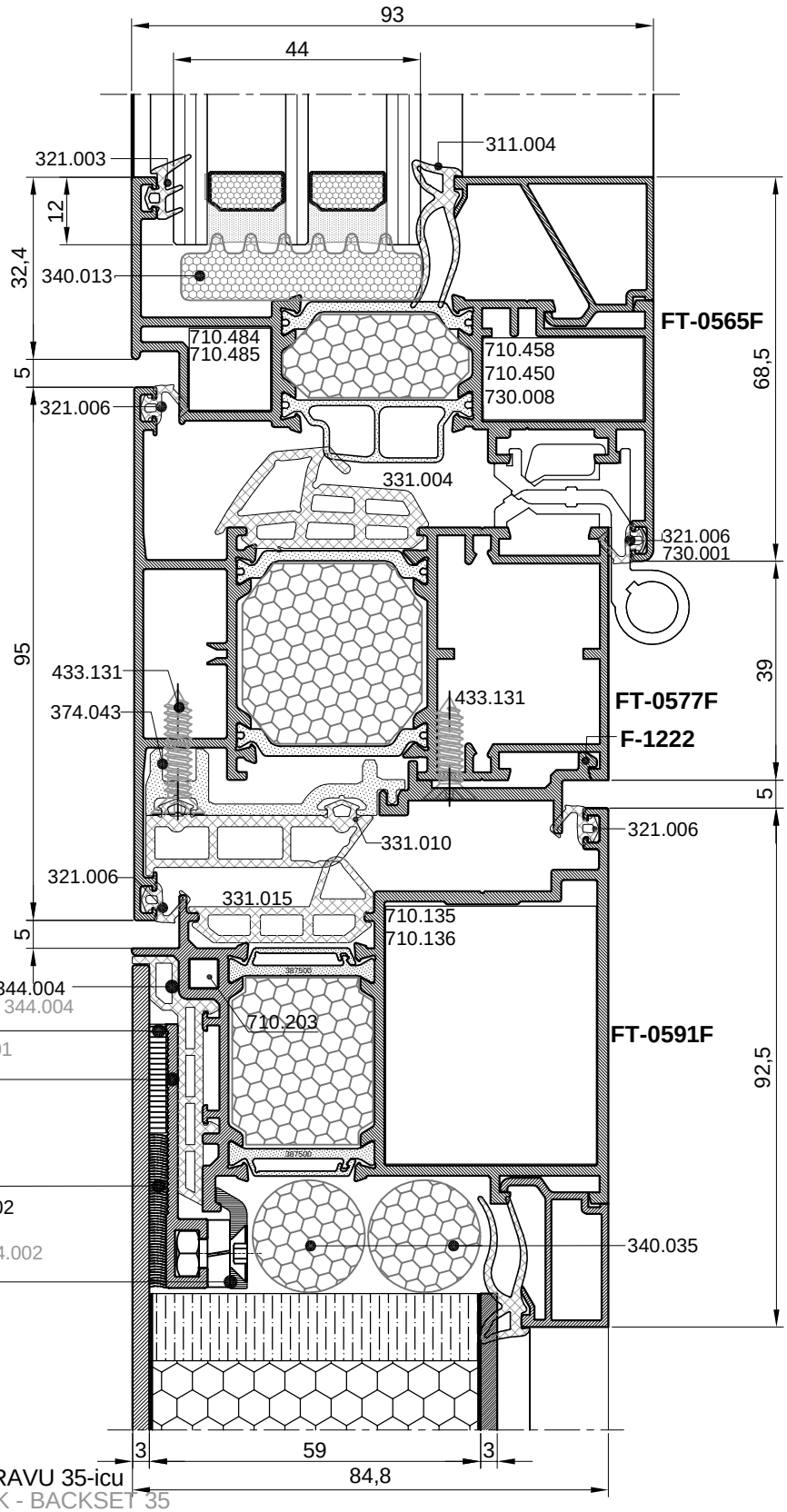

NAPOMENA: KRILO FT-0591F ZA BRAVU 35-icu
REMARK: SASH FT-0591F FOR LOCK - BACKSET 35

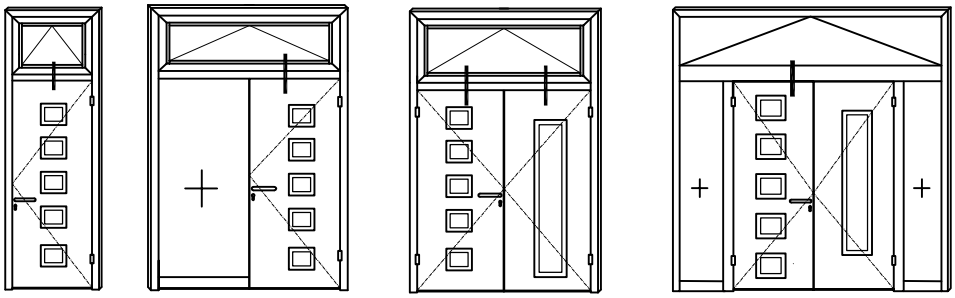

PRESJEK-14
CROSS SECTION-14

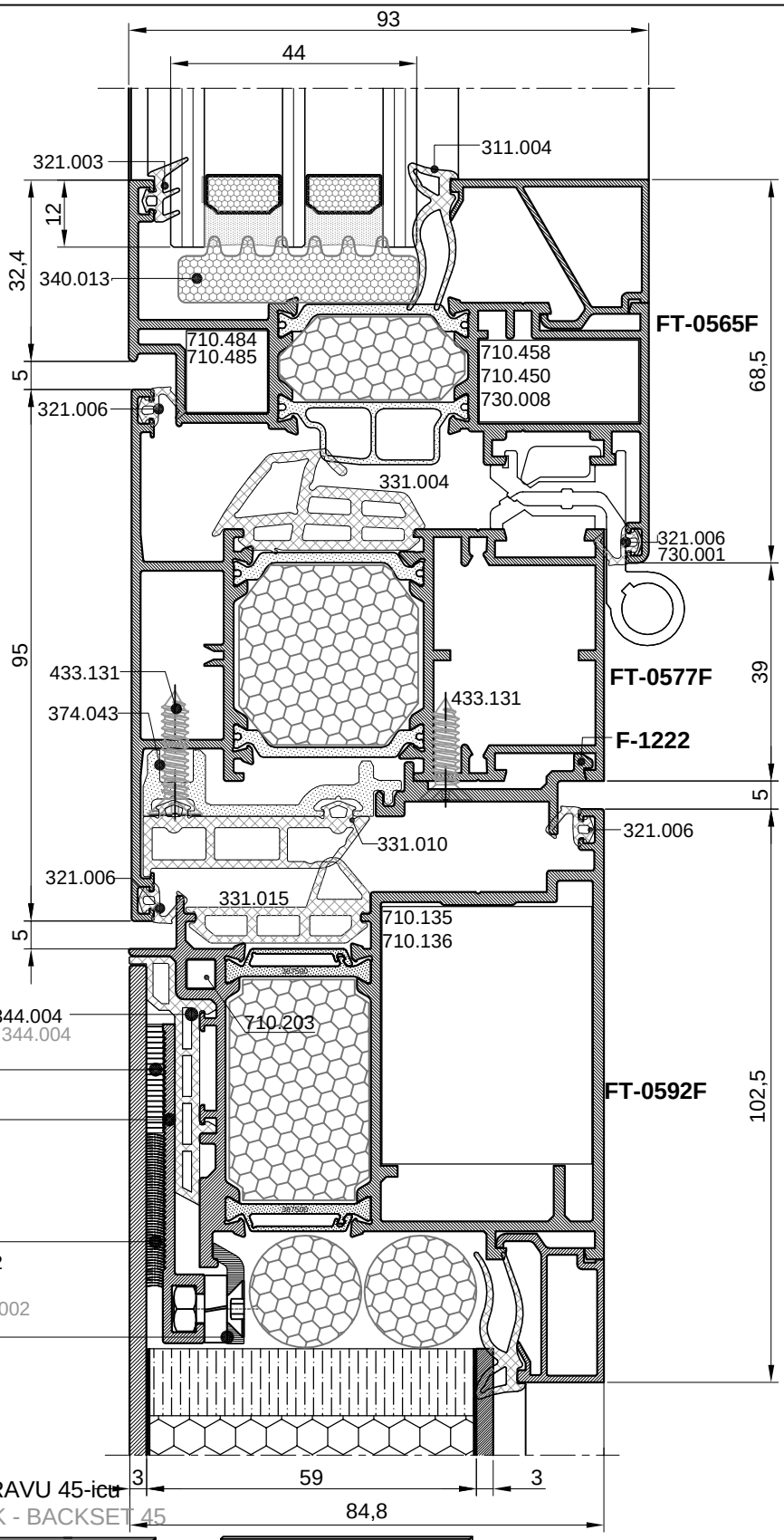

NAPOMENA: KRILO FT-0592F ZA BRAVU 45-icu
REMARK: SASH FT-0592F FOR LOCK - BACKSET 45

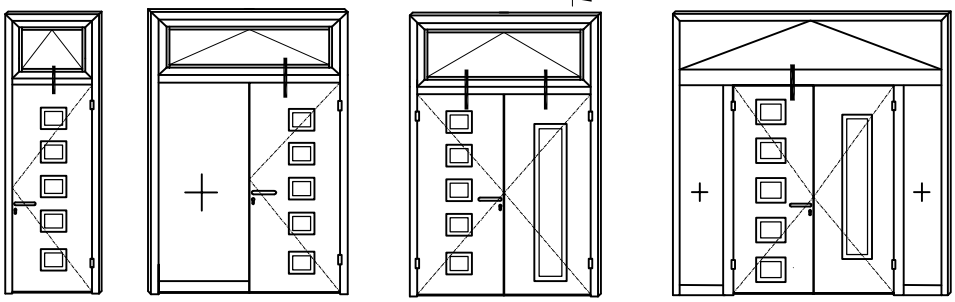

PRESJEK-15
CROSS SECTION-15

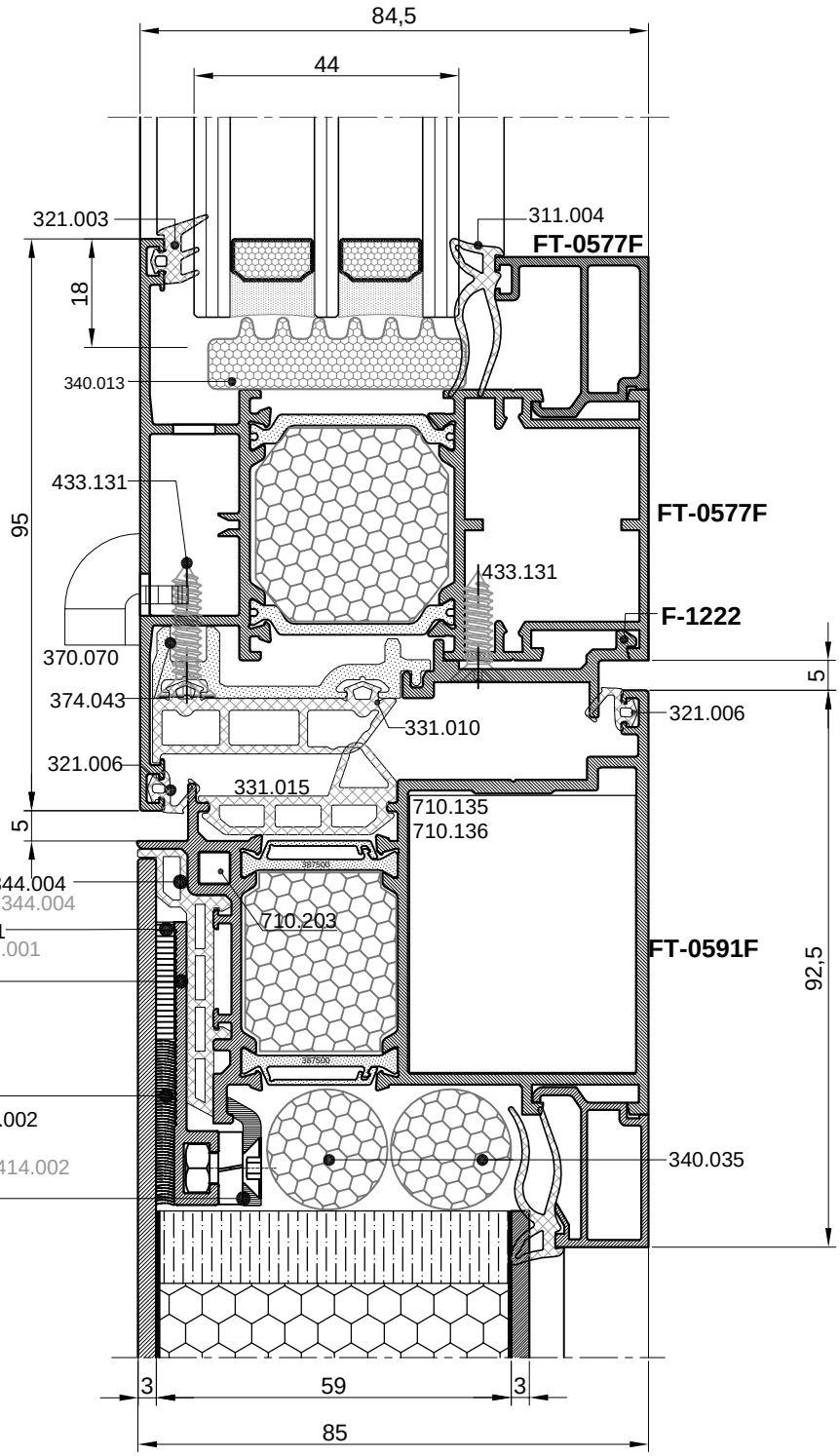

NAPOMENA: KRILO FT-0591F ZA BRAVU 35-icu
REMARK: SASH FT-0591F FOR LOCK - BACKSET 35

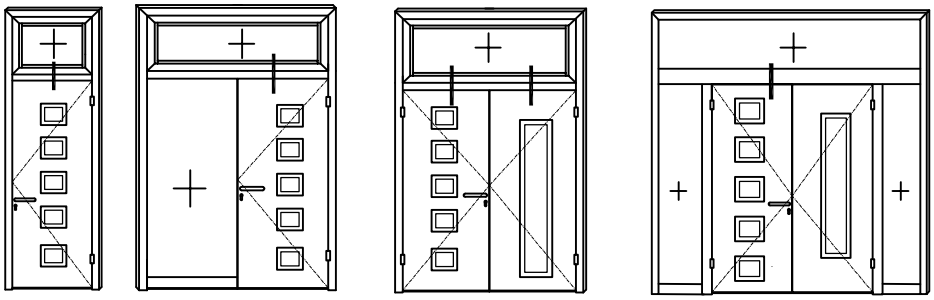

PRESJEK-15
CROSS SECTION-15

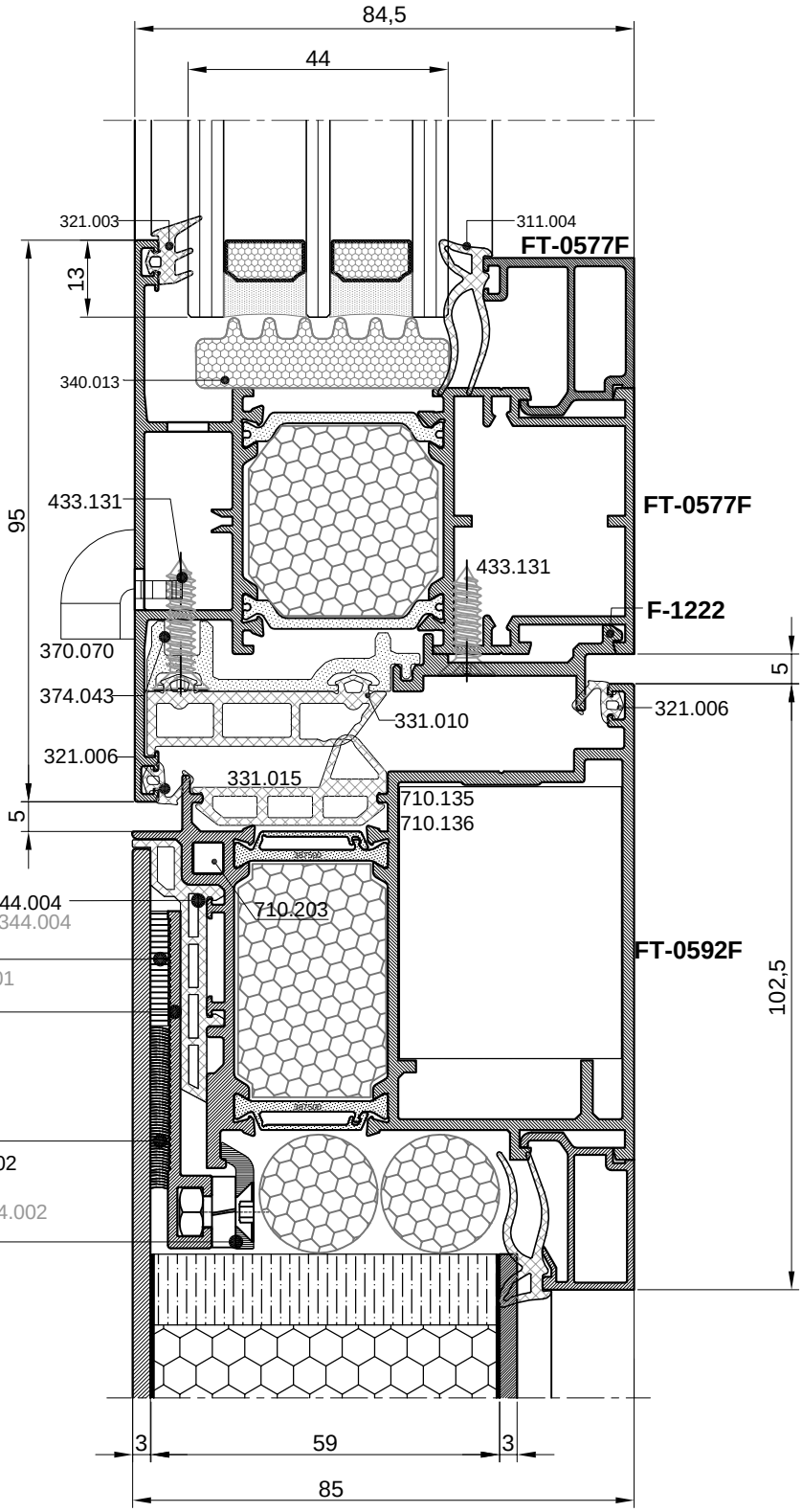

obostrano ljepljiva traka 3mm-412.001
double sided adhesive tape 3mm-412.001

F-1205
(eloksaža S-10; < 6 mjeseci)
F-1205
(anodizing S-10; < 6 months)

Terostat T-8519P-primer-414.001
Terostat MS 9399 (Loctite)-ljepilo-414.002
Terostat T-8519P-primer-414.001
Terostat MS 9399 (Loctite)-adhesive-414.002

kopča 141.001
(vijak M5x12+sig. rascjepka)
panel clamp 141.001
(screw M5x12+split pin)

NAPOMENA: KRILO FT-0592F ZA BRAVU 45-icu
REMARK: SASH FT-0592F FOR LOCK - BACKSET 45

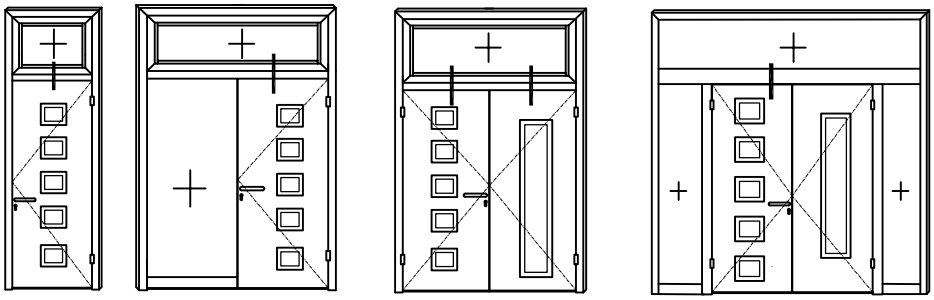

PRESJEK-16
CROSS SECTION-16

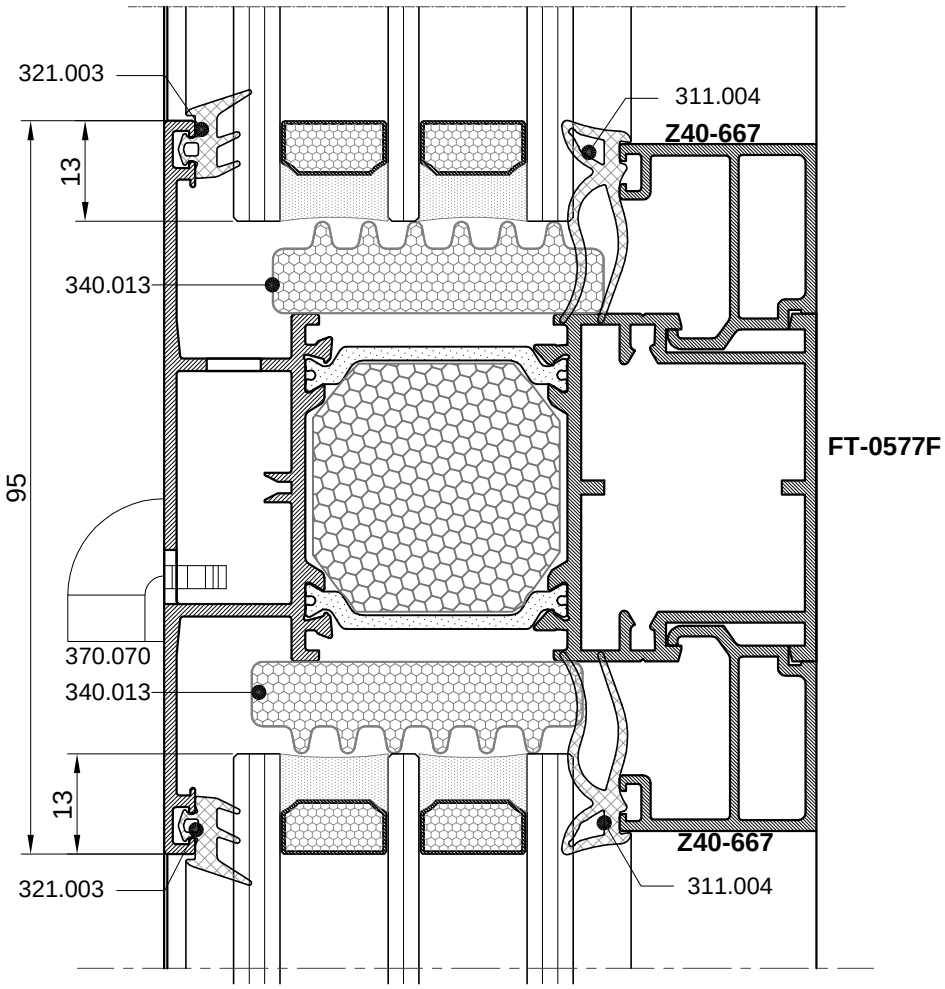

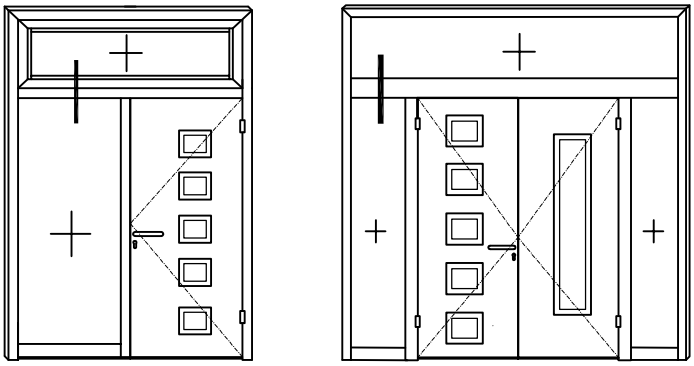

PRESJEK-17
CROSS SECTION-17

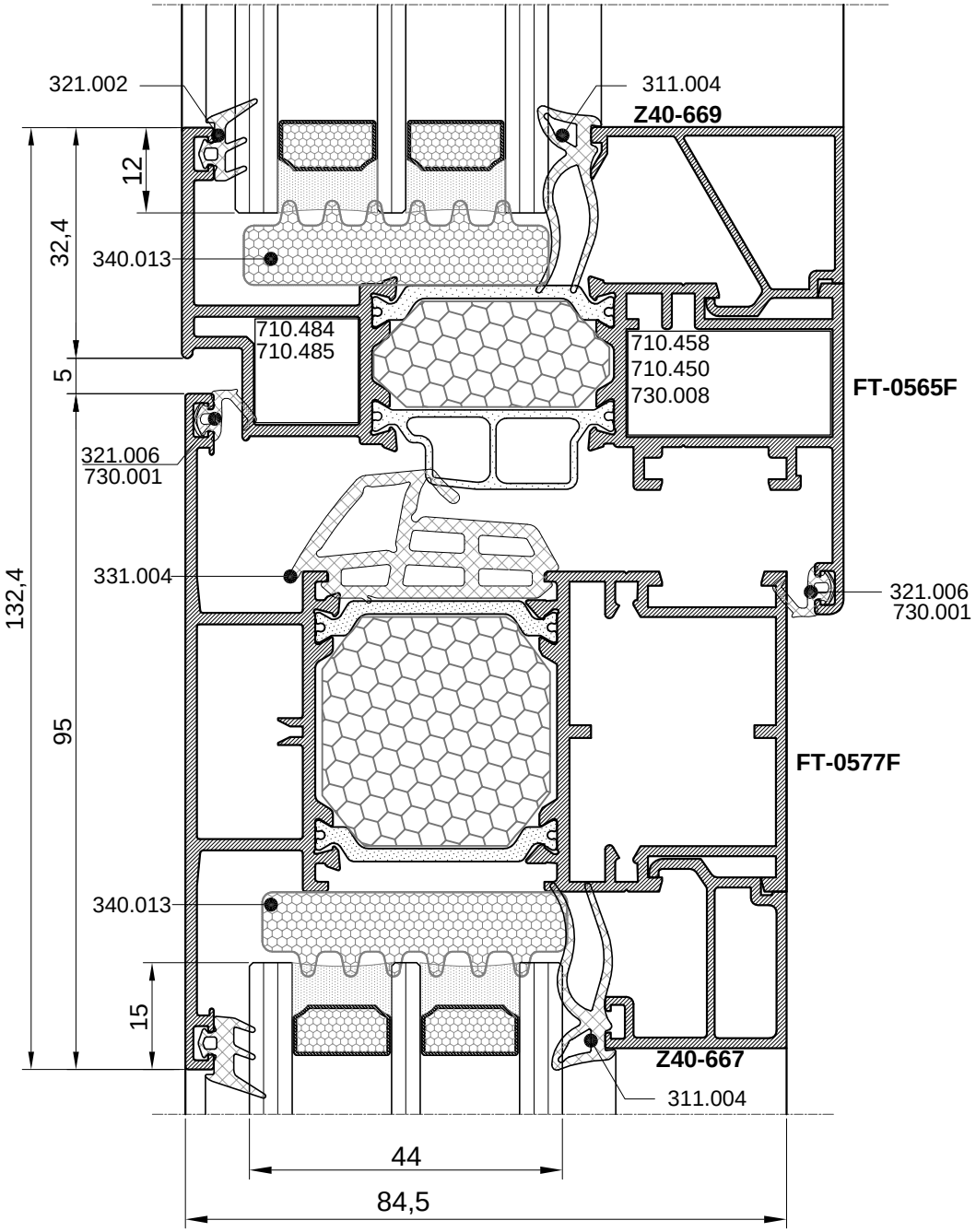

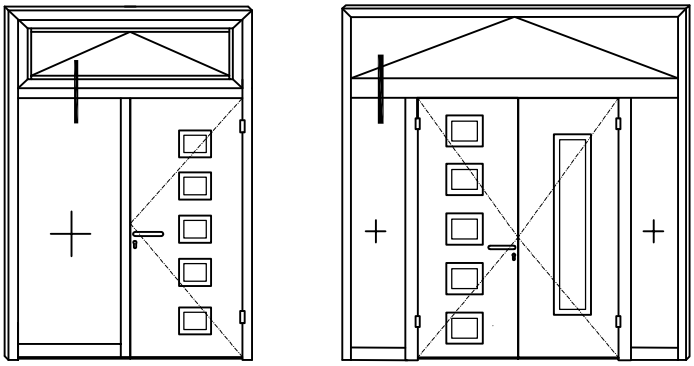

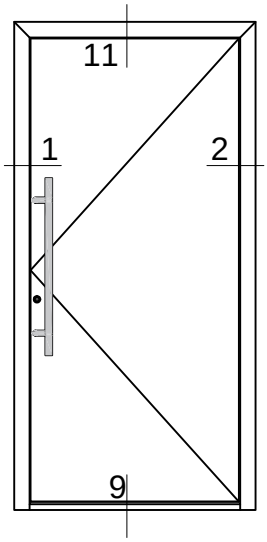
11
1
2
9

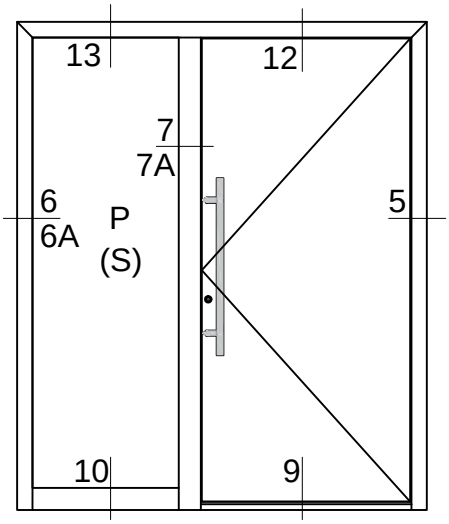
13
12
7
7A
6
6A
P
(S)
5
10
9

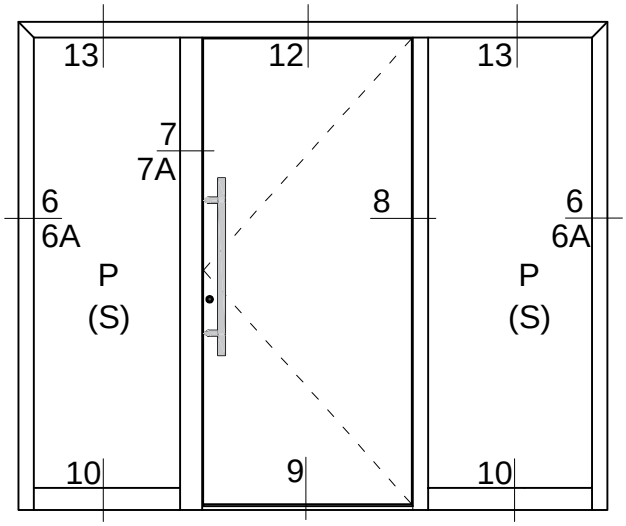
13
12
13
7
7A
6
6A
P
(S)
8
6
6A
P
(S)
10
9
10

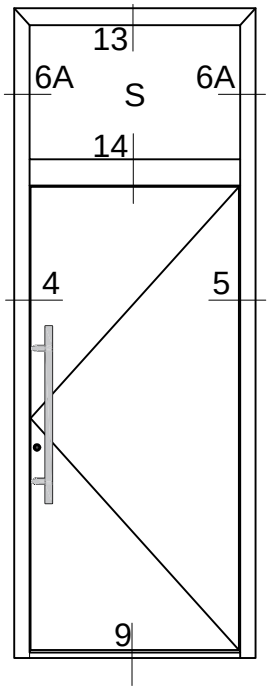
13
6A
S
6A
14
4
5
9

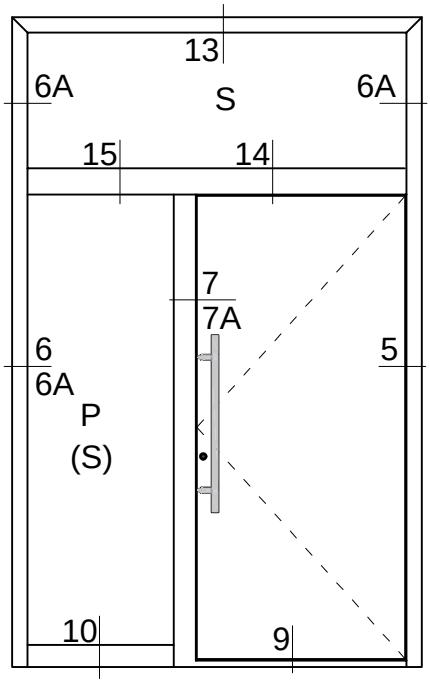
13
6A
S
6A
15
14
7
7A
6
6A
P
(S)
5
10
9

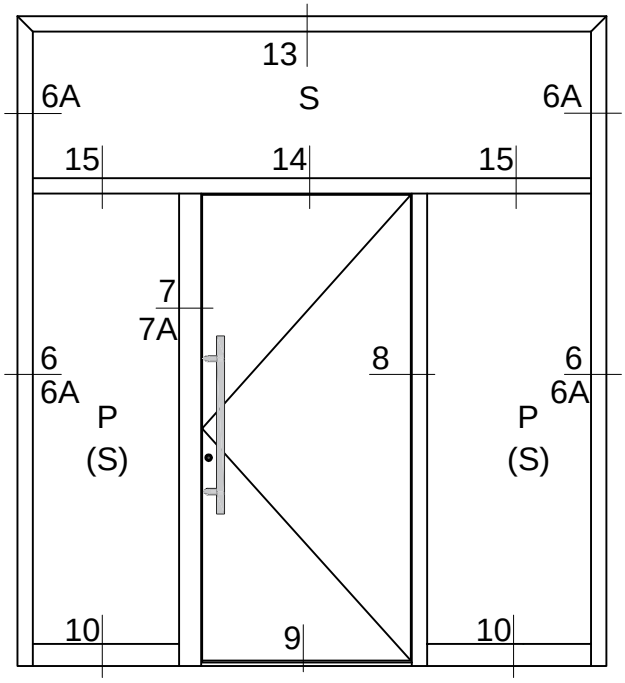
13
6A
S
6A
15
14
15
7
7A
6
6A
P
(S)
8
6
6A
P
(S)
10
9
10

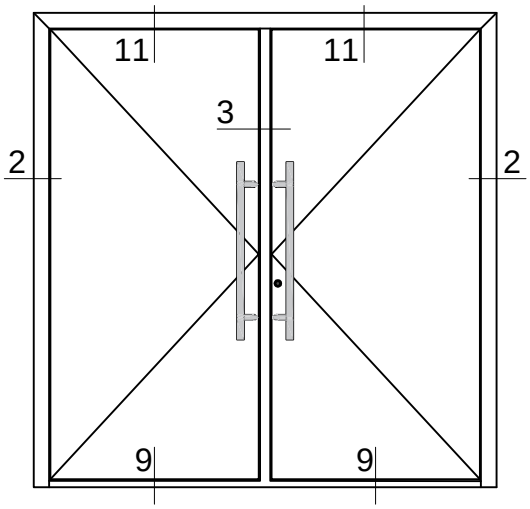
11
11
3
2
2
9
9

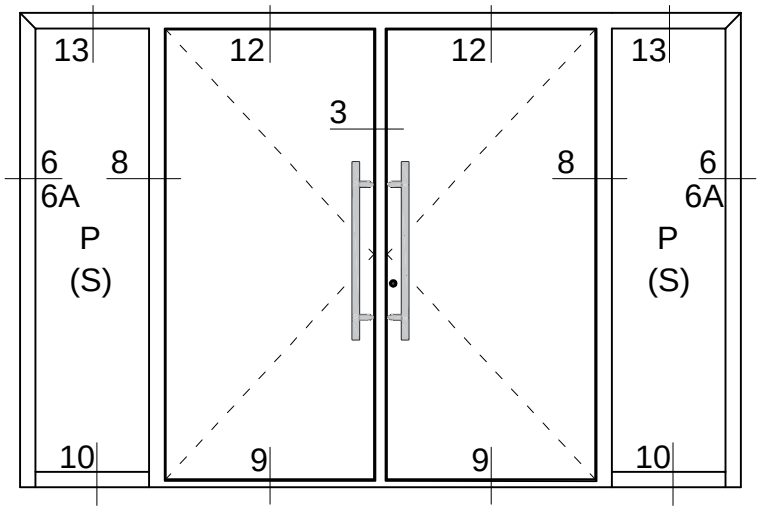
13
12
12
13
3
6
6A
8
8
6
6A
P
(S)
P
(S)
10
9
9
10

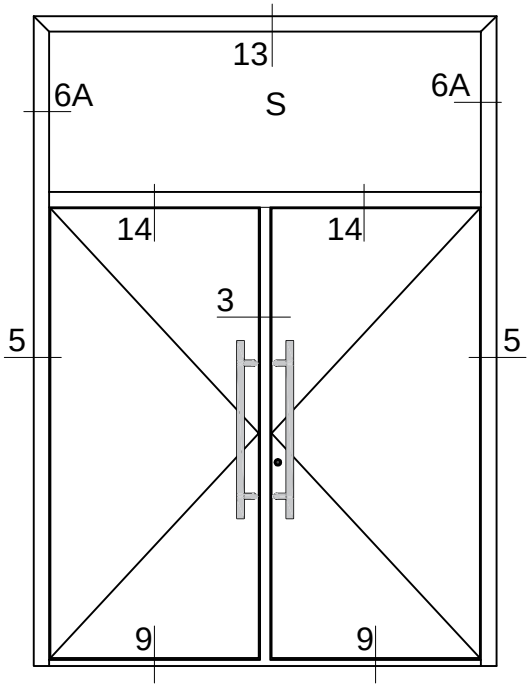
13
6A
S
6A
14
14
3
5
5
9
9

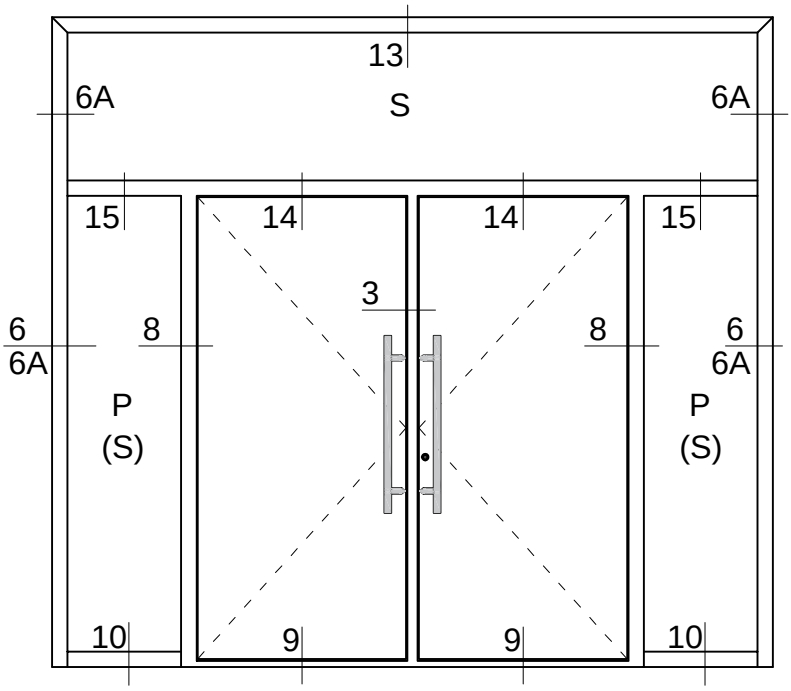
13
6A
S
6A
15
14
14
15
3
6
6A
8
8
6
6A
P
(S)
P
(S)
10
9
9
10

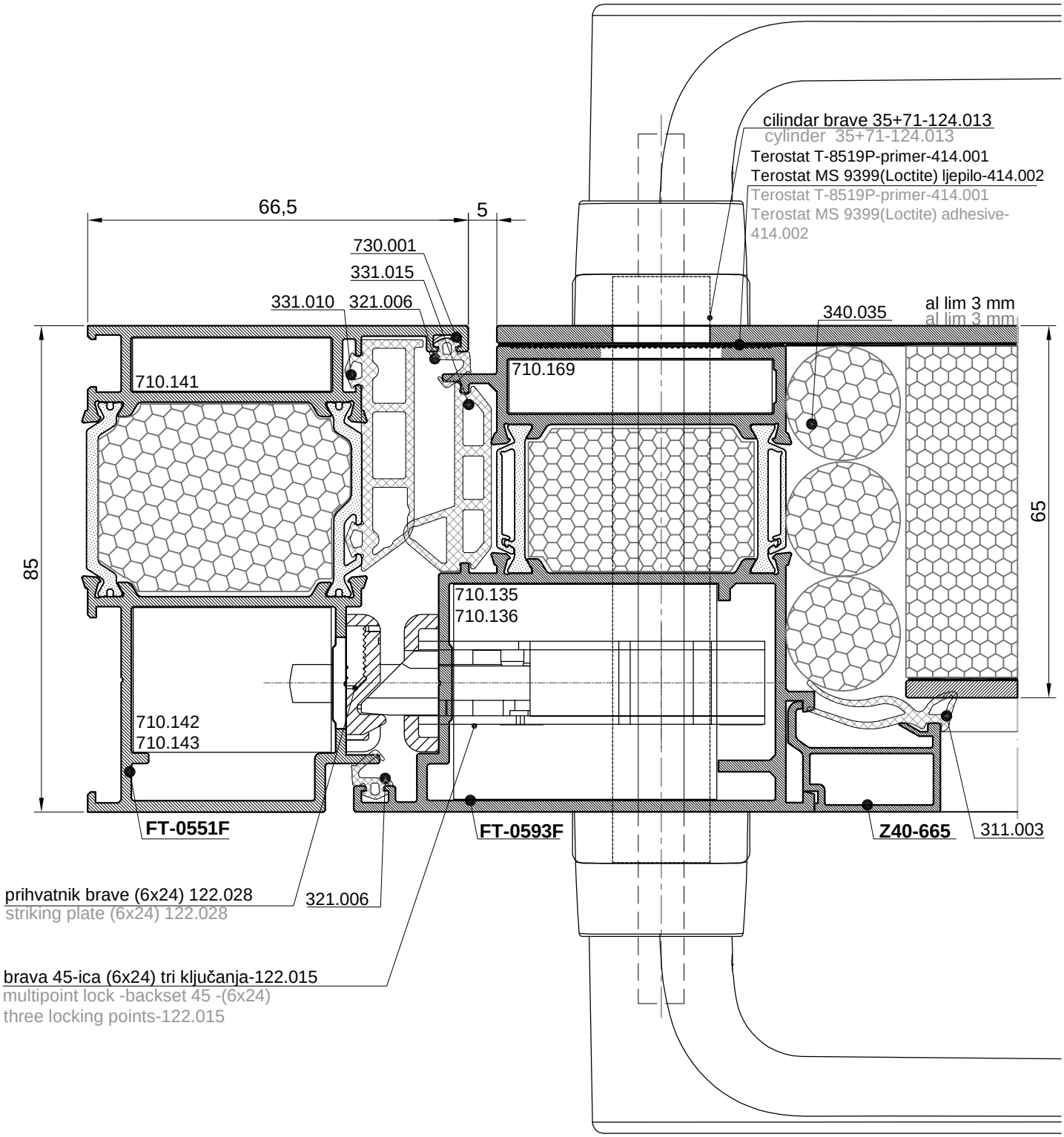

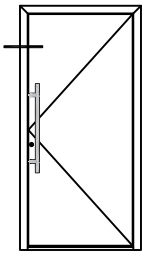

PRESJEK-1
CROSS SECTION-1

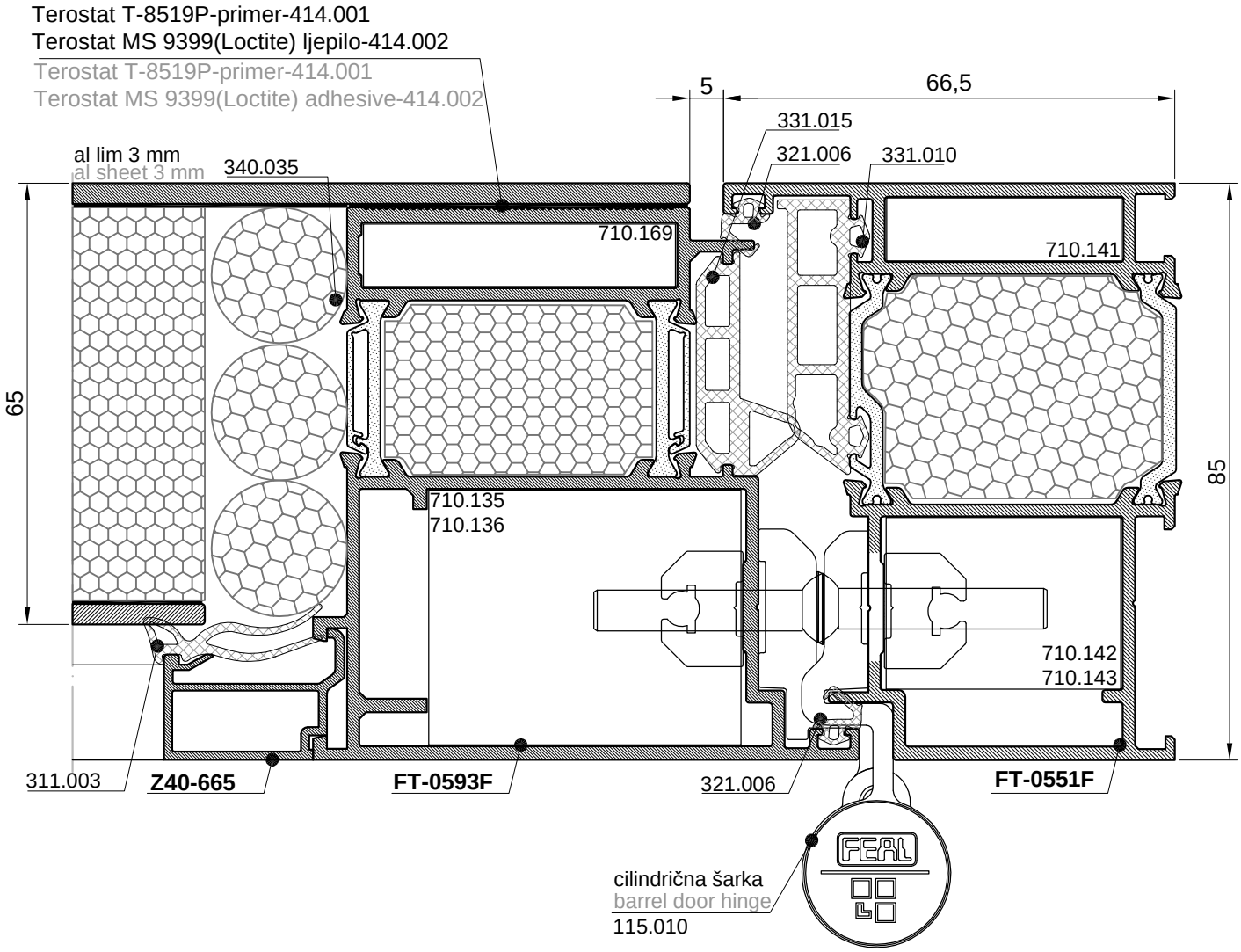

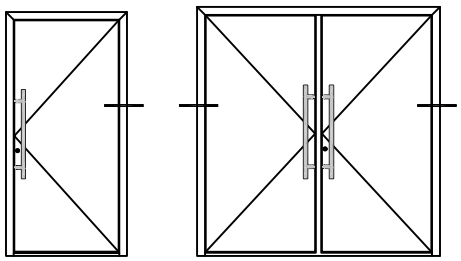

PRESJEK-2
CROSS SECTION-2

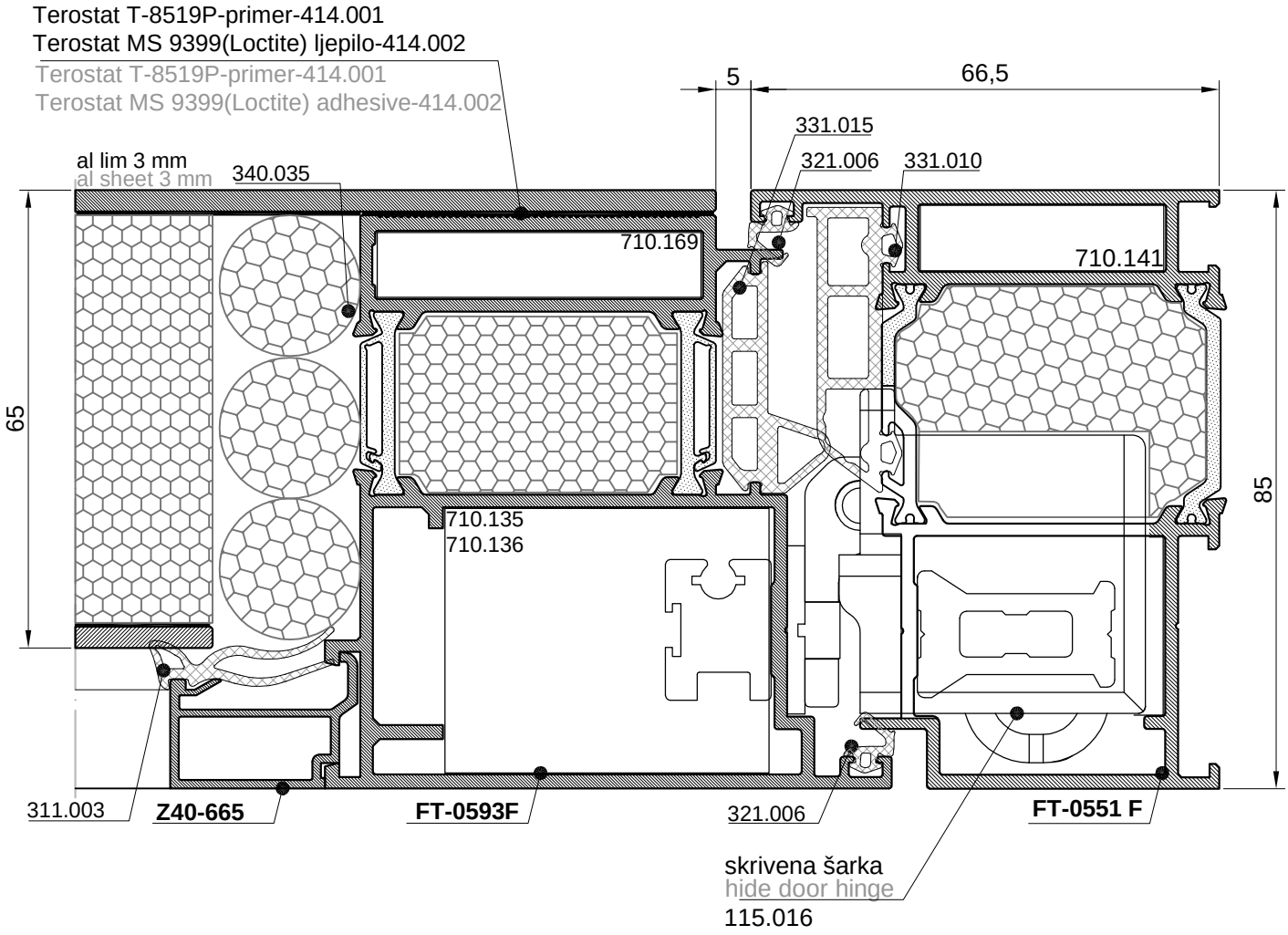

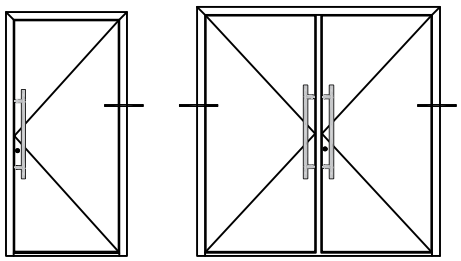

PRESJEK-2
CROSS SECTION-2

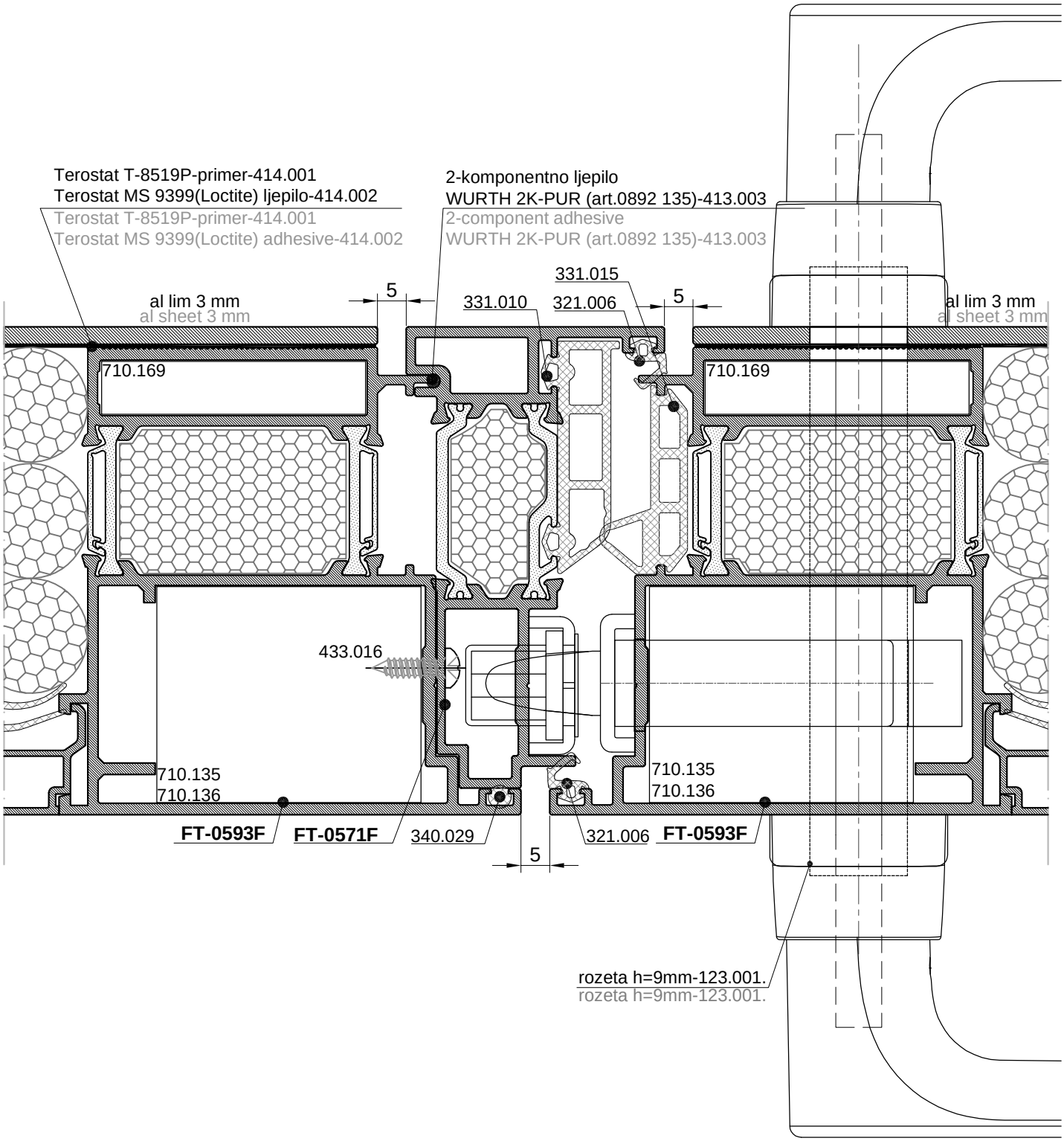

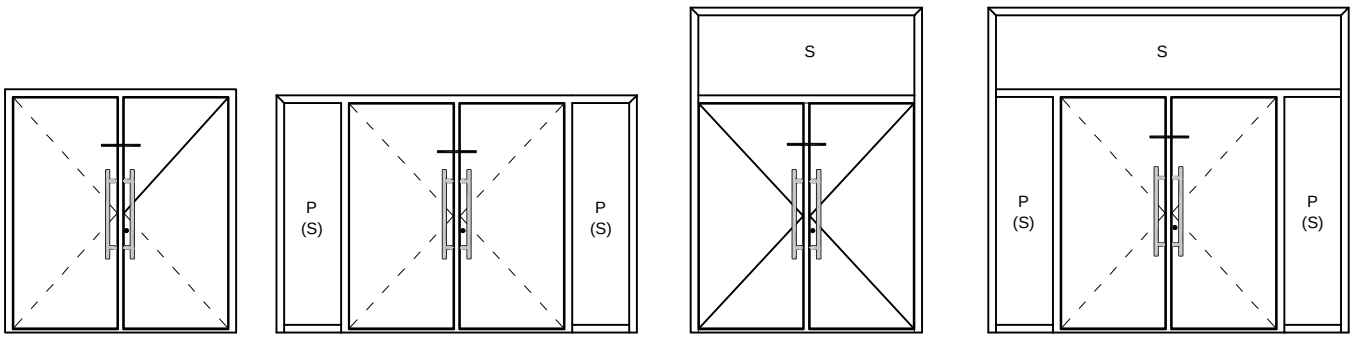

PRESJEK-3
CROSS SECTION-3

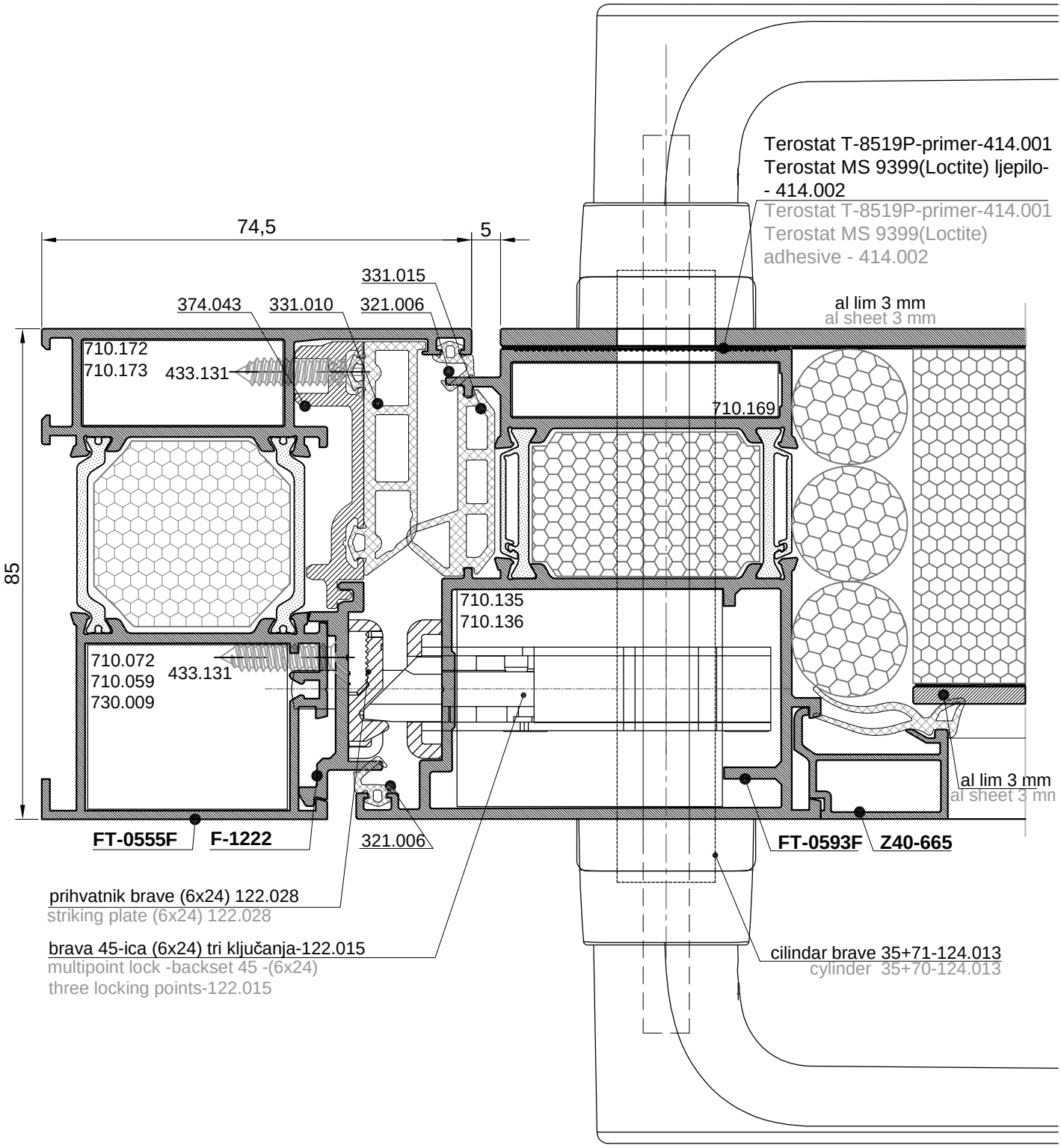

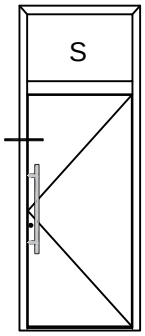

PRESJEK-4
CROSS SECTION-4

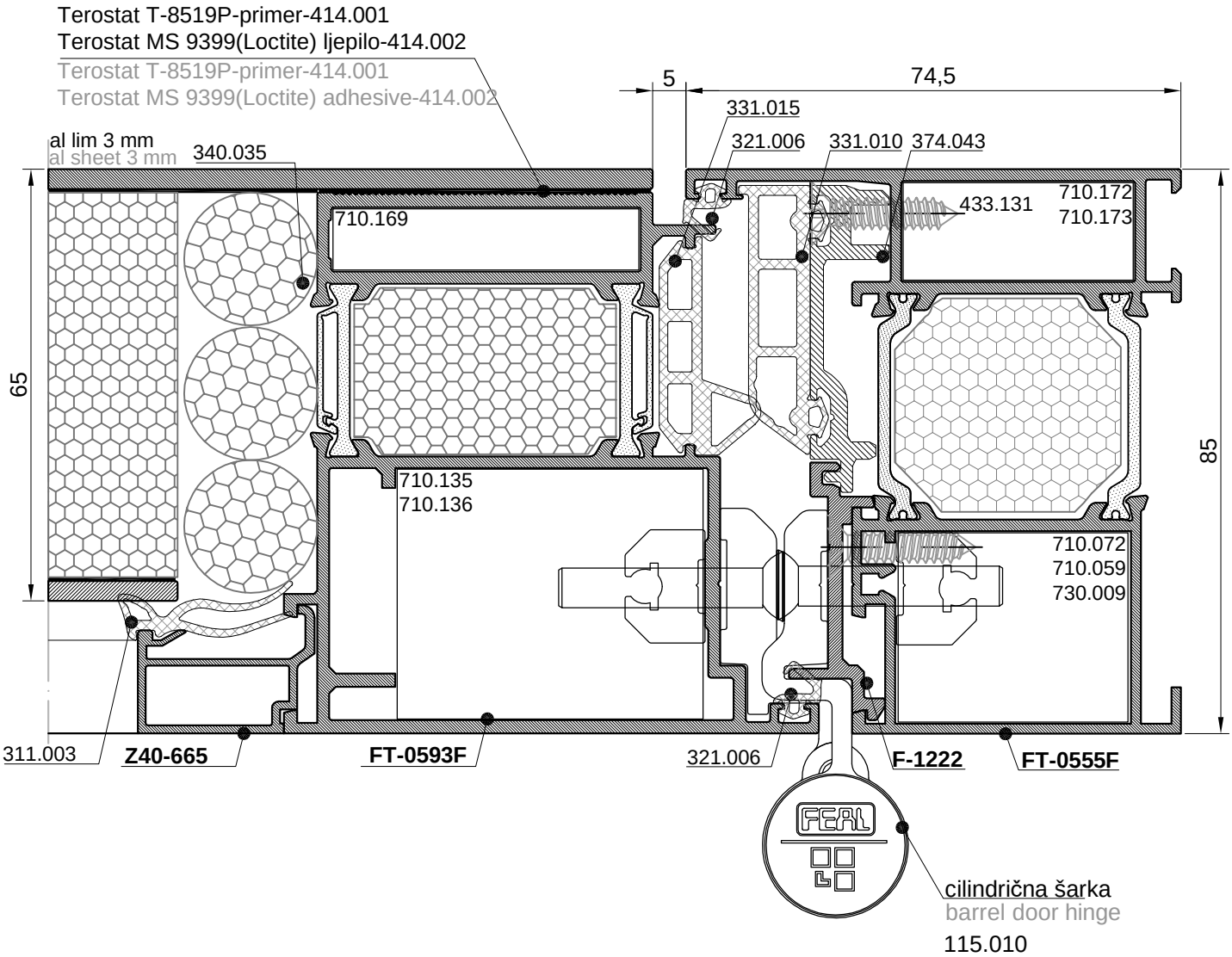

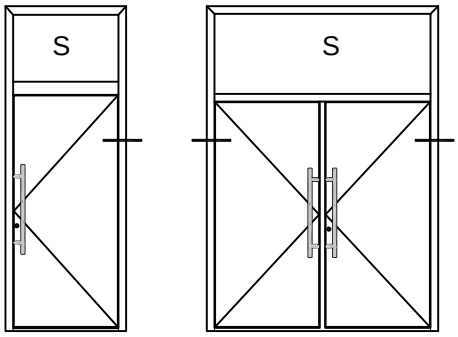

PRESJEK-5
CROSS SECTION-5

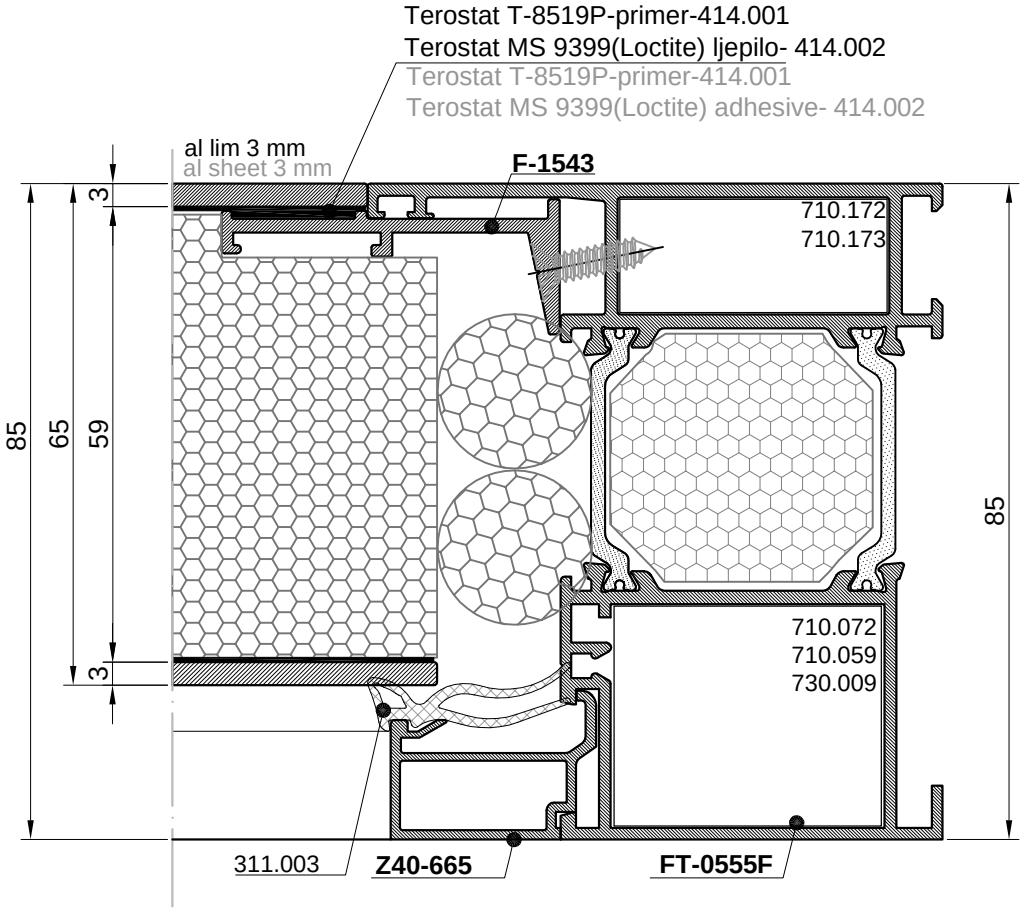

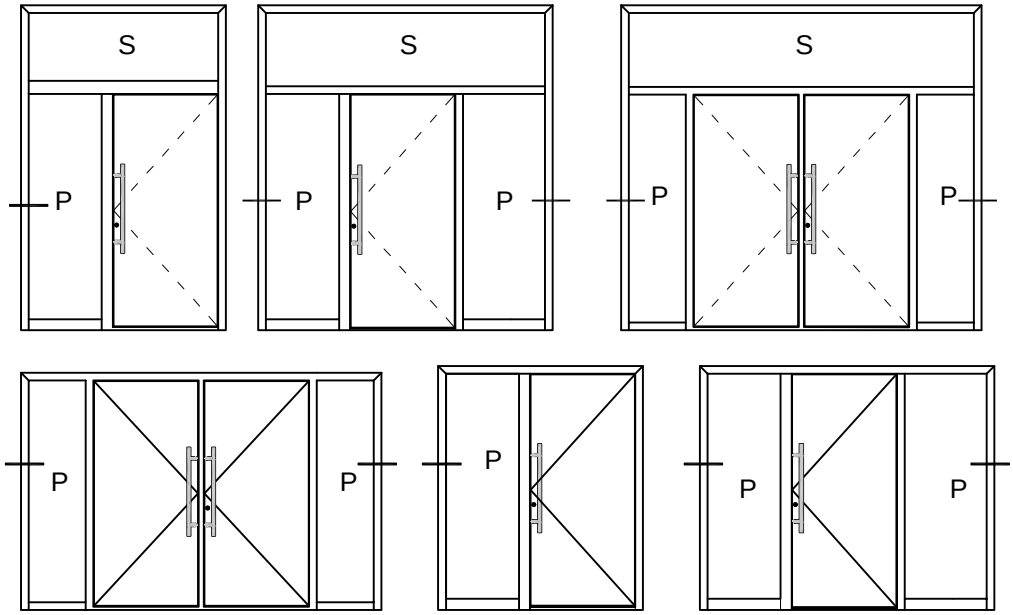

PRESJEK-6
CROSS SECTION-6

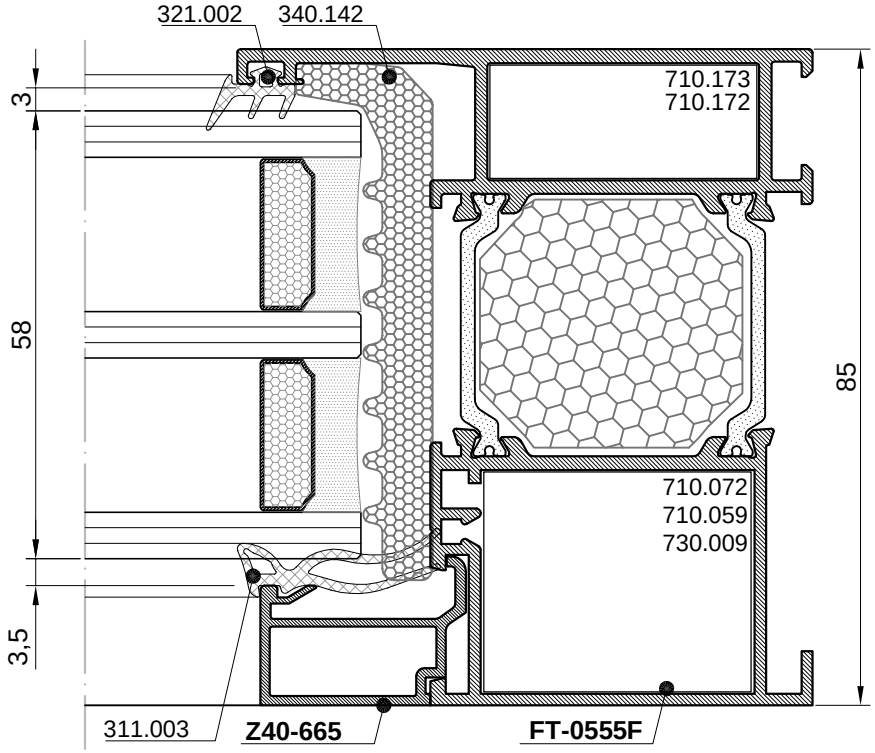

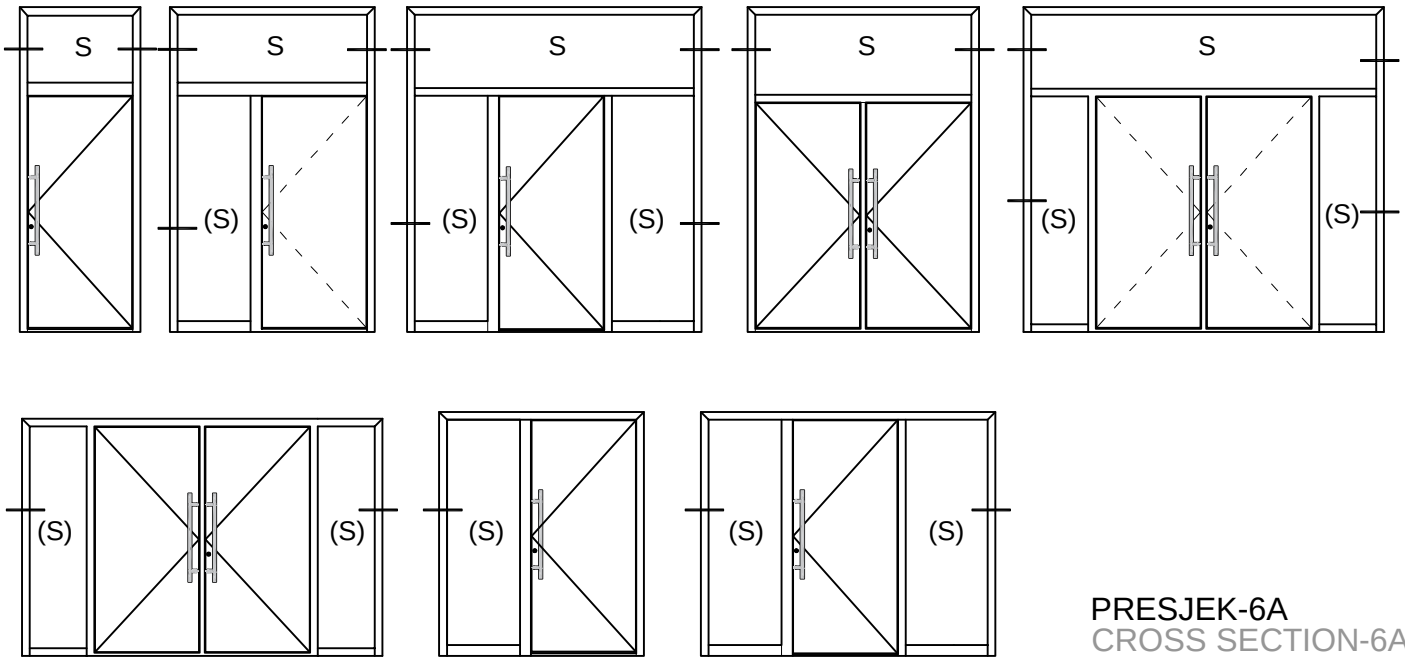

PRESJEK-6A
CROSS SECTION-6A

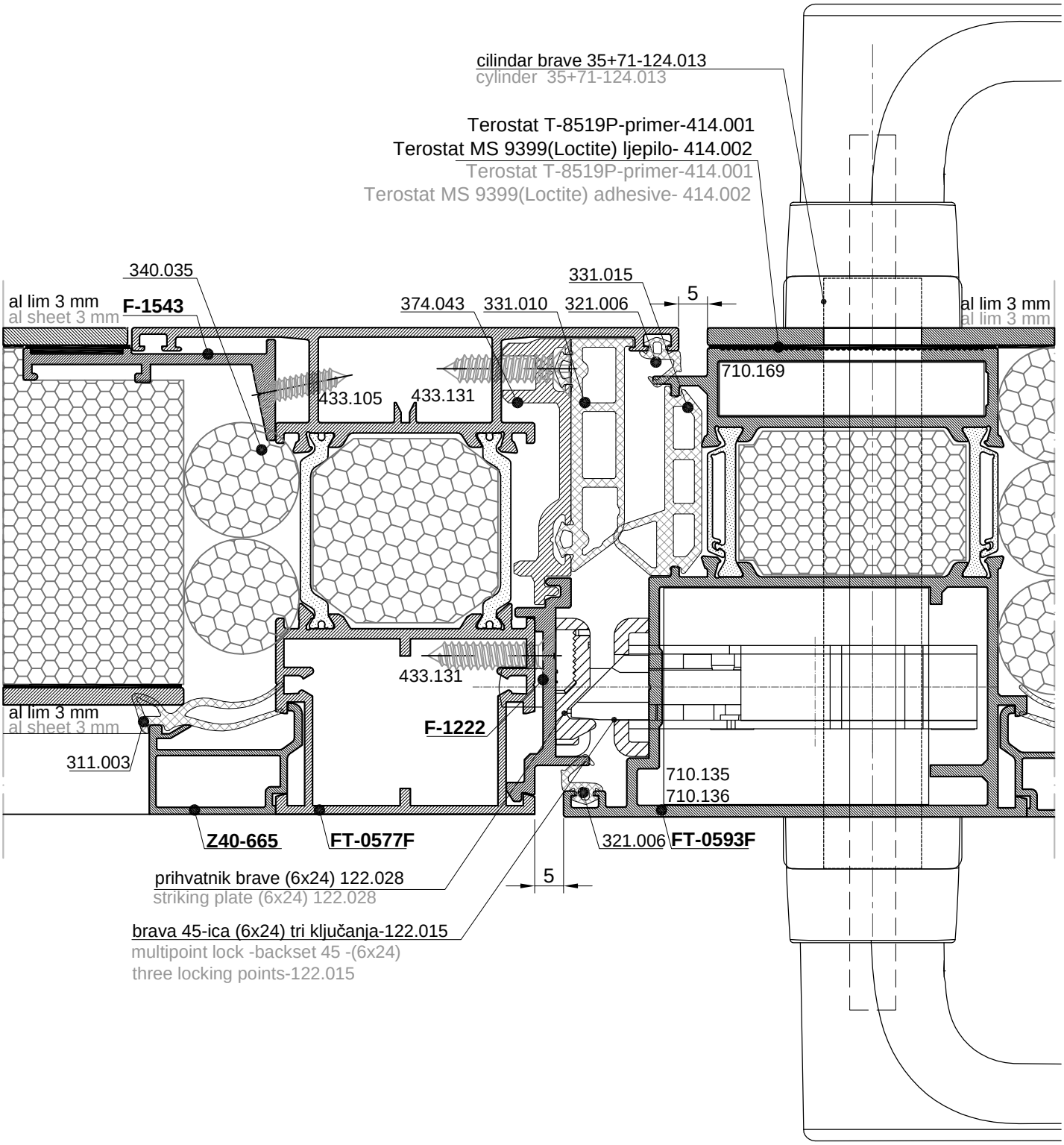

PRESJEK-7
CROSS SECTION-7

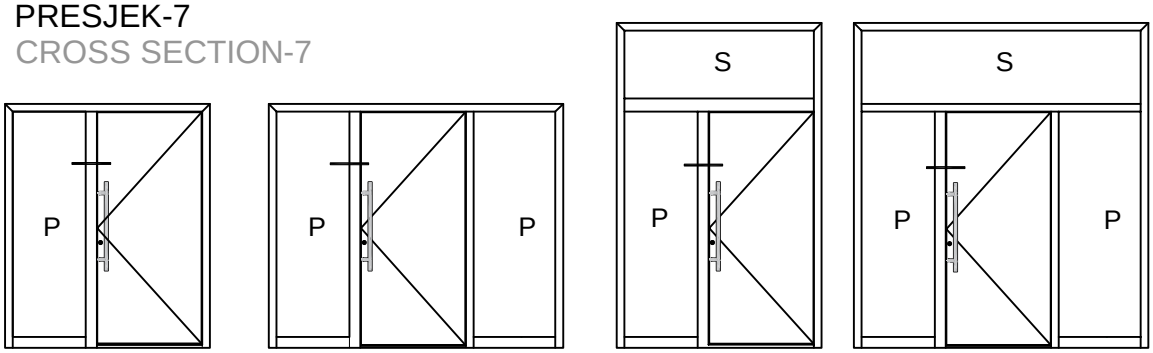

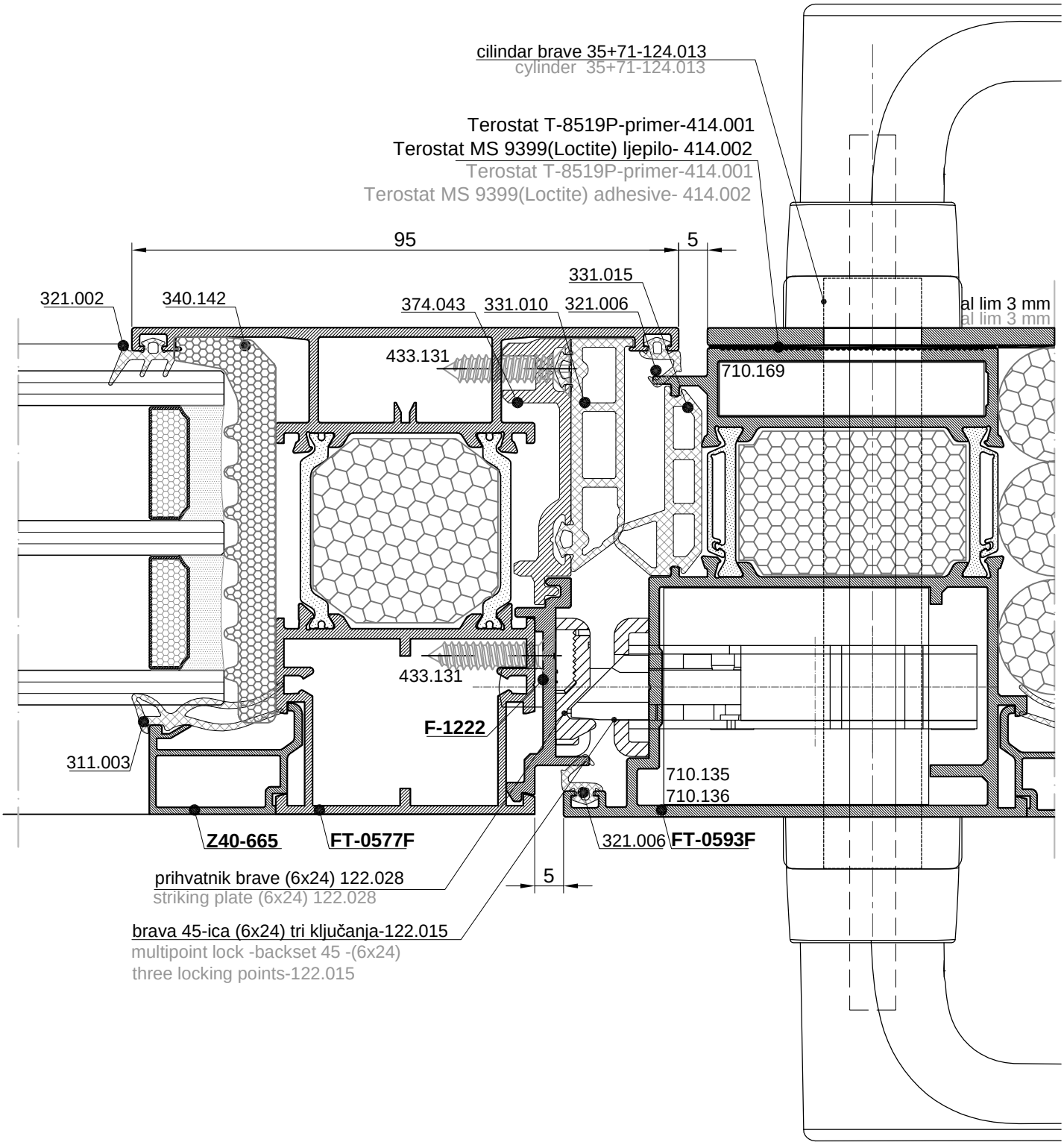

PRESJEK-7A
CROSS SECTION-7A

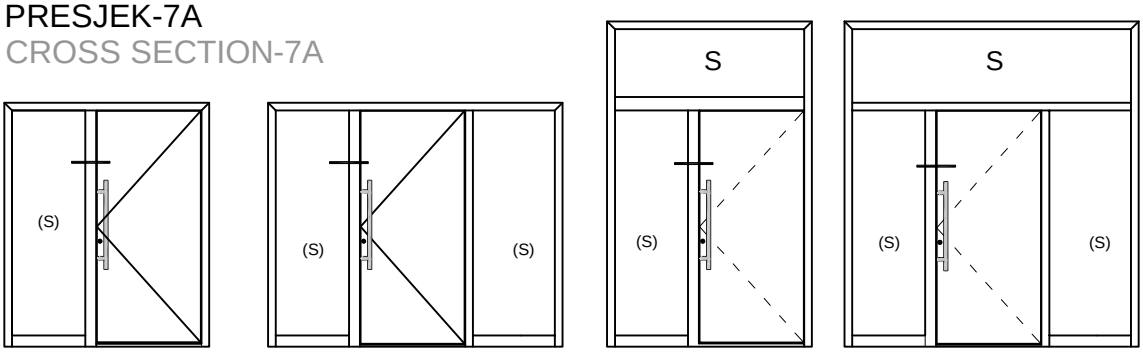

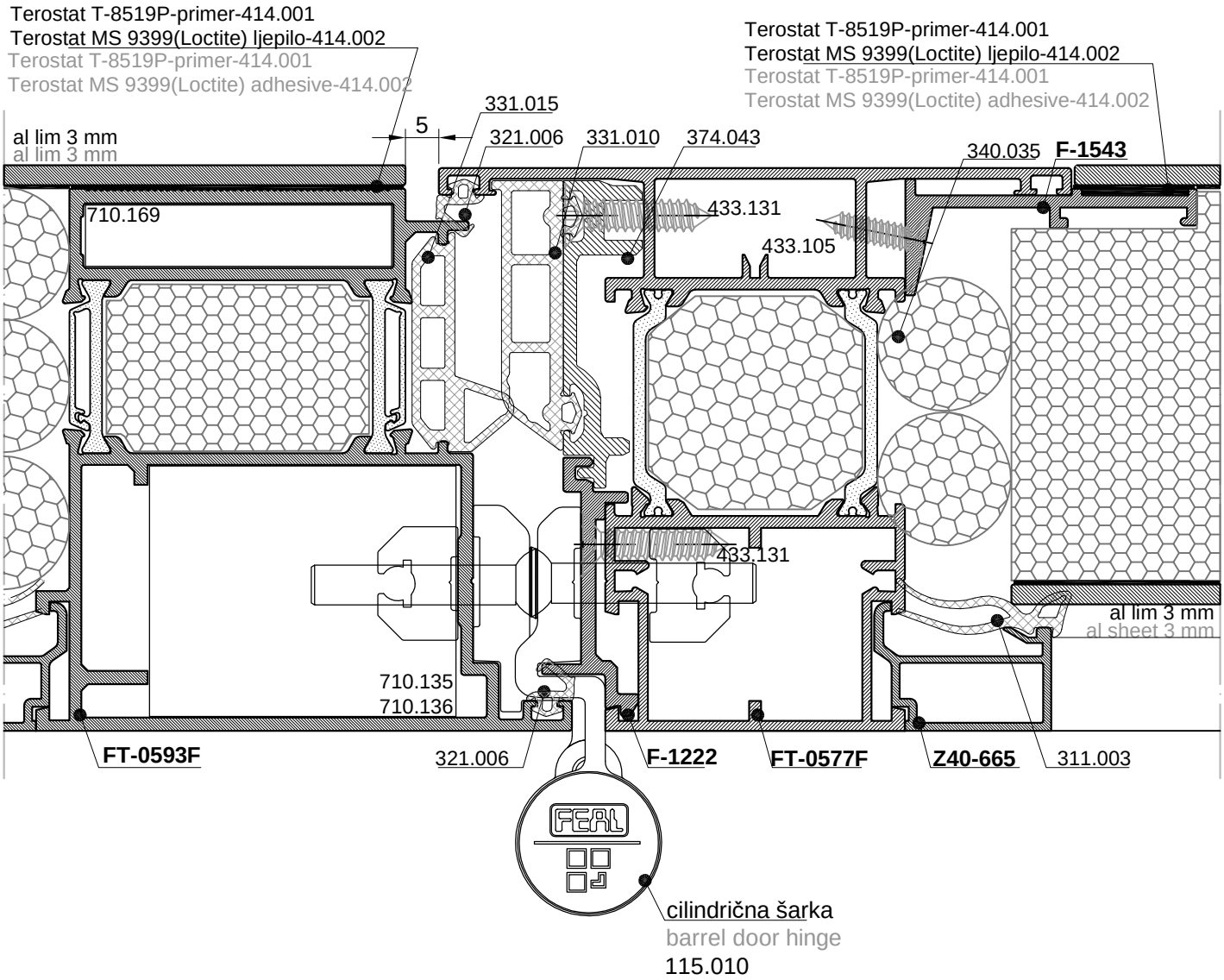

PRESJEK-8
CROSS PRESJEK-8

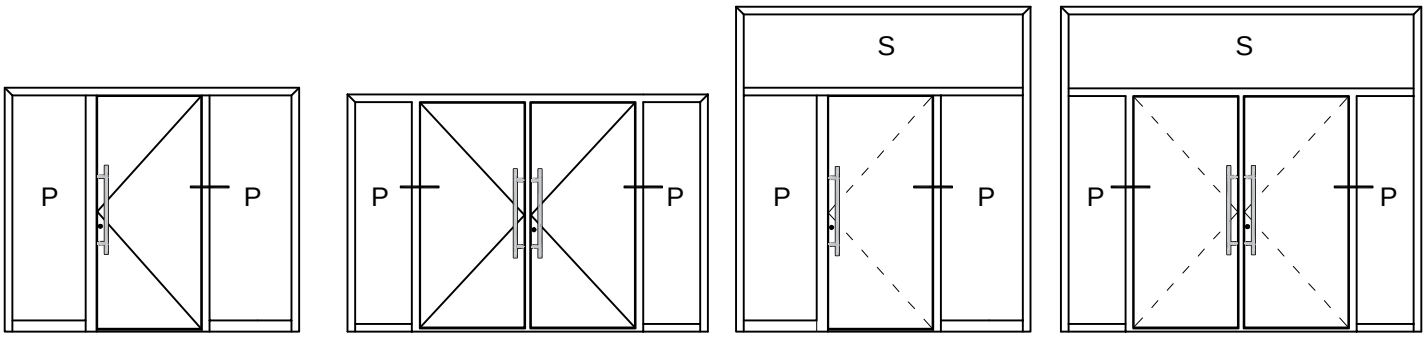

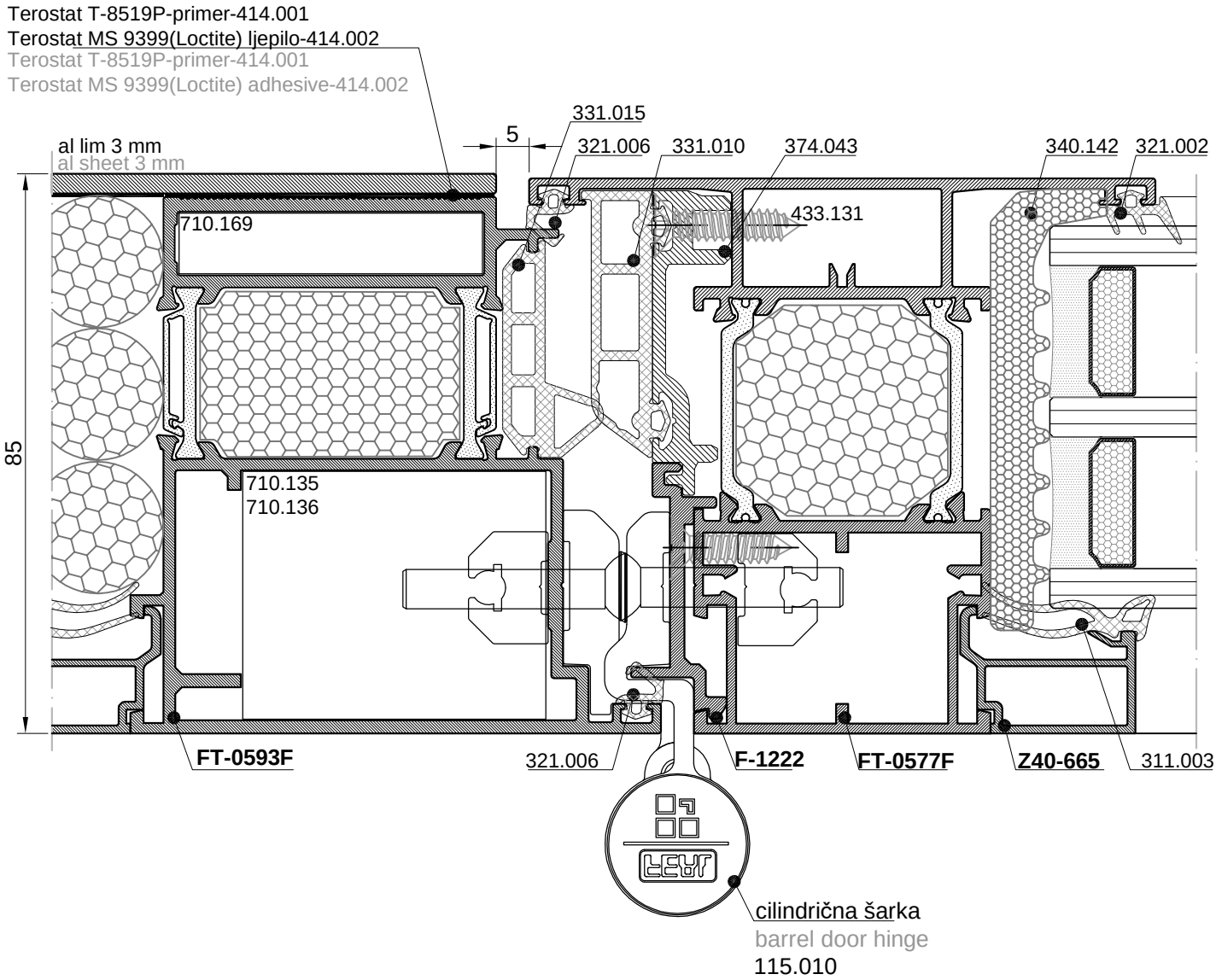

PRESJEK-8A
CROSS SECTION-8A

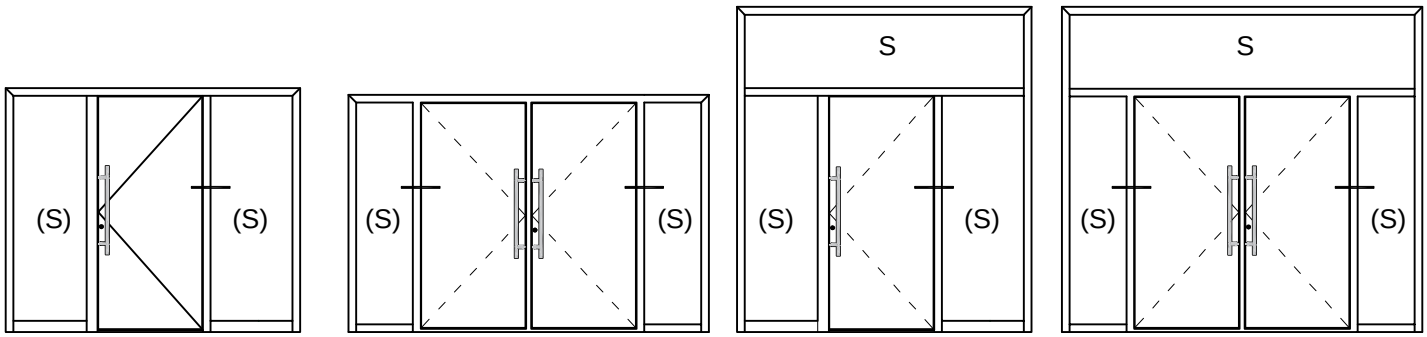

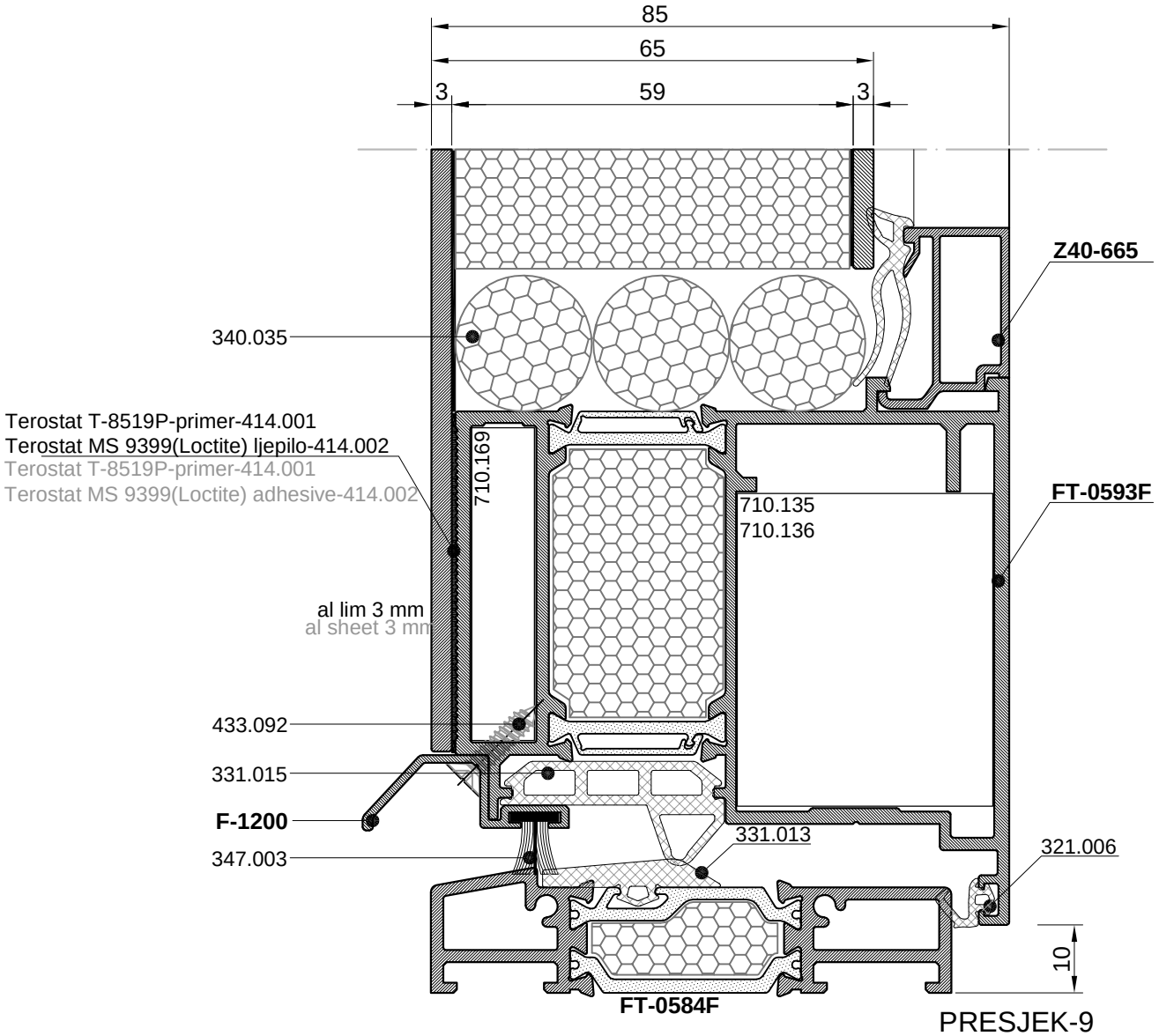

PRESJEK-9
CROSS SECTION-9

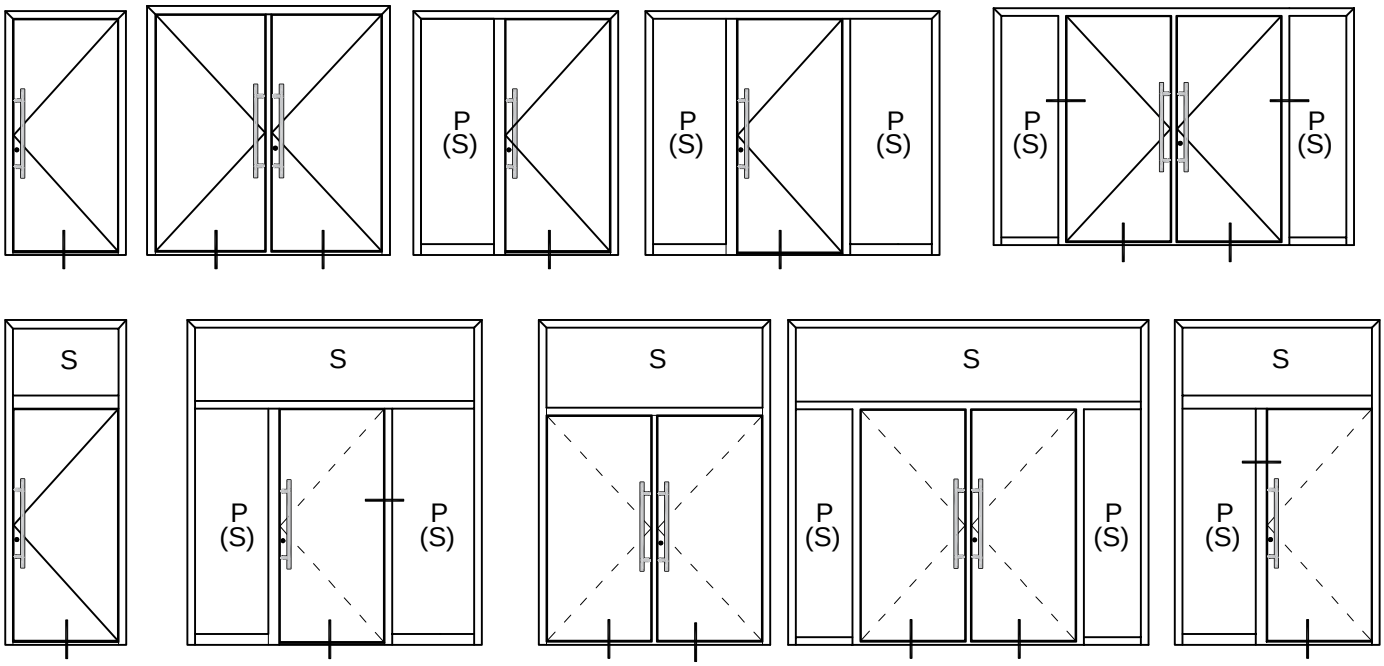

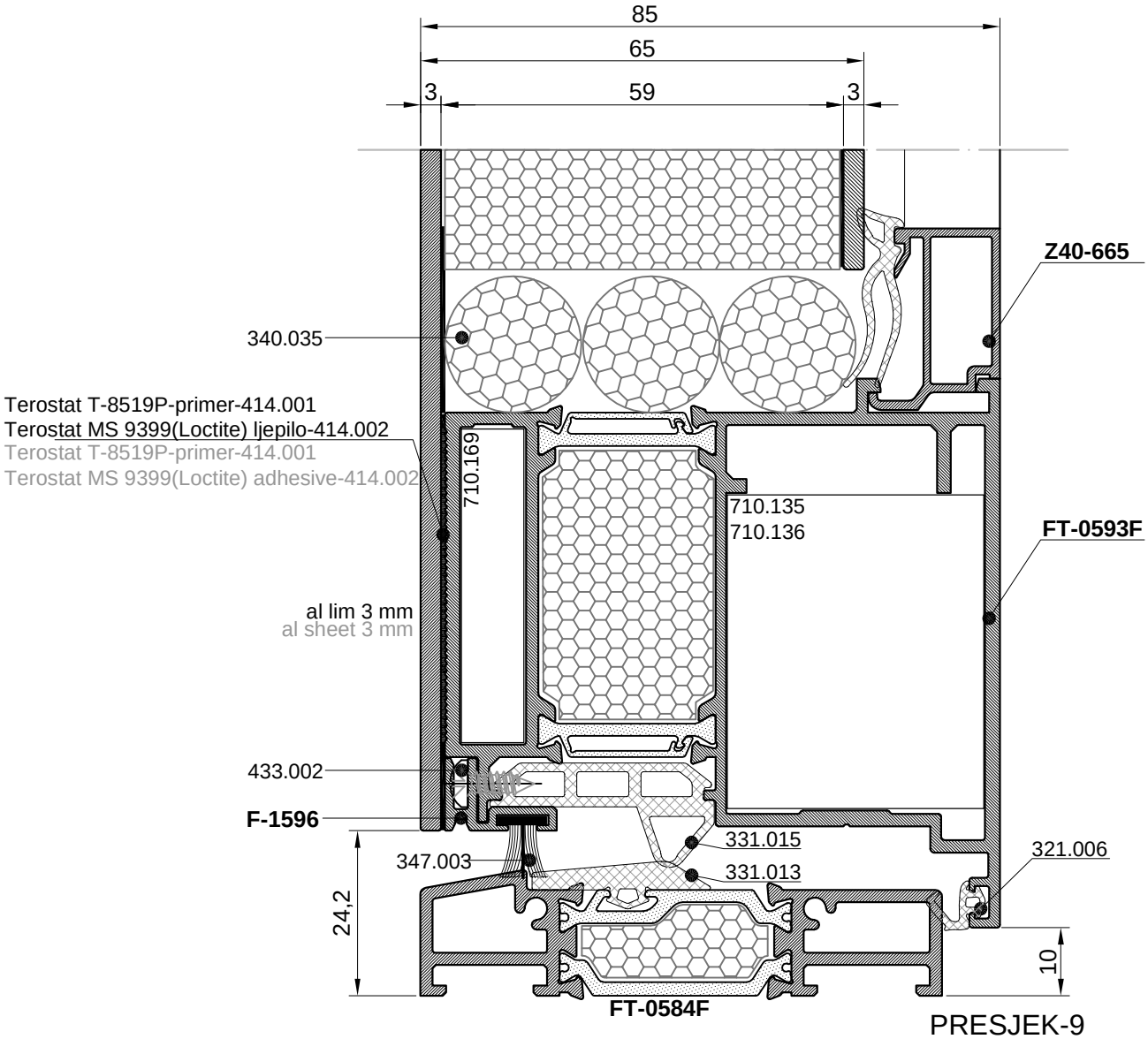

PRESJEK-9
CROSS SECTION-9

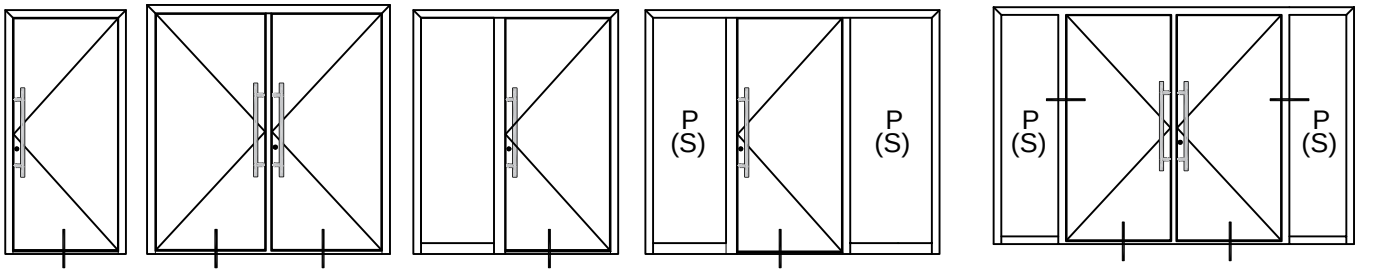

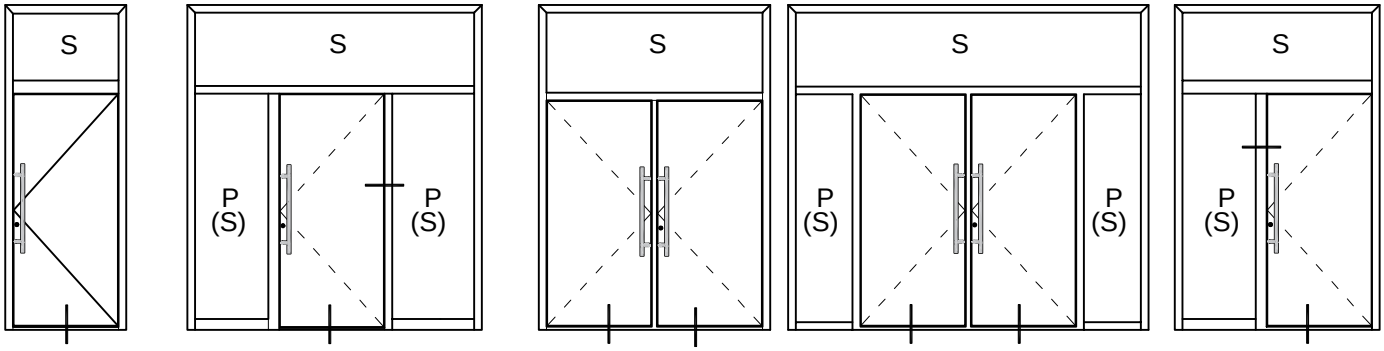

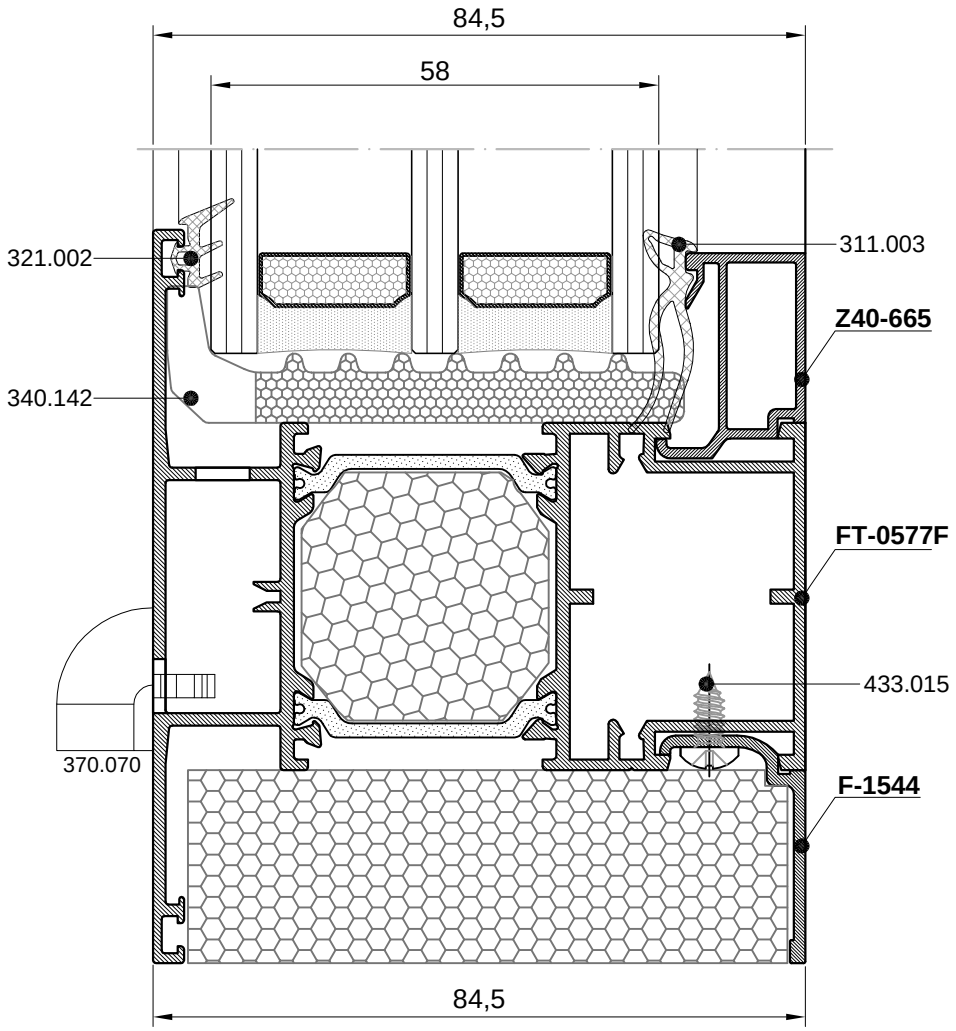

PRESJEK-10A
CROSS SECTION-10A

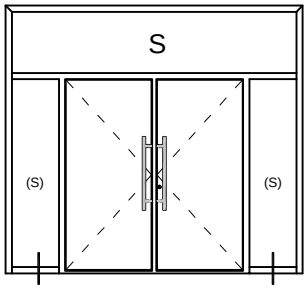

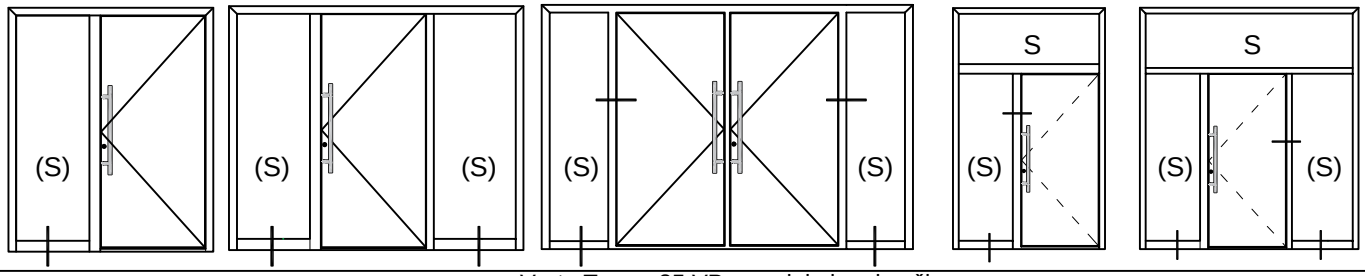

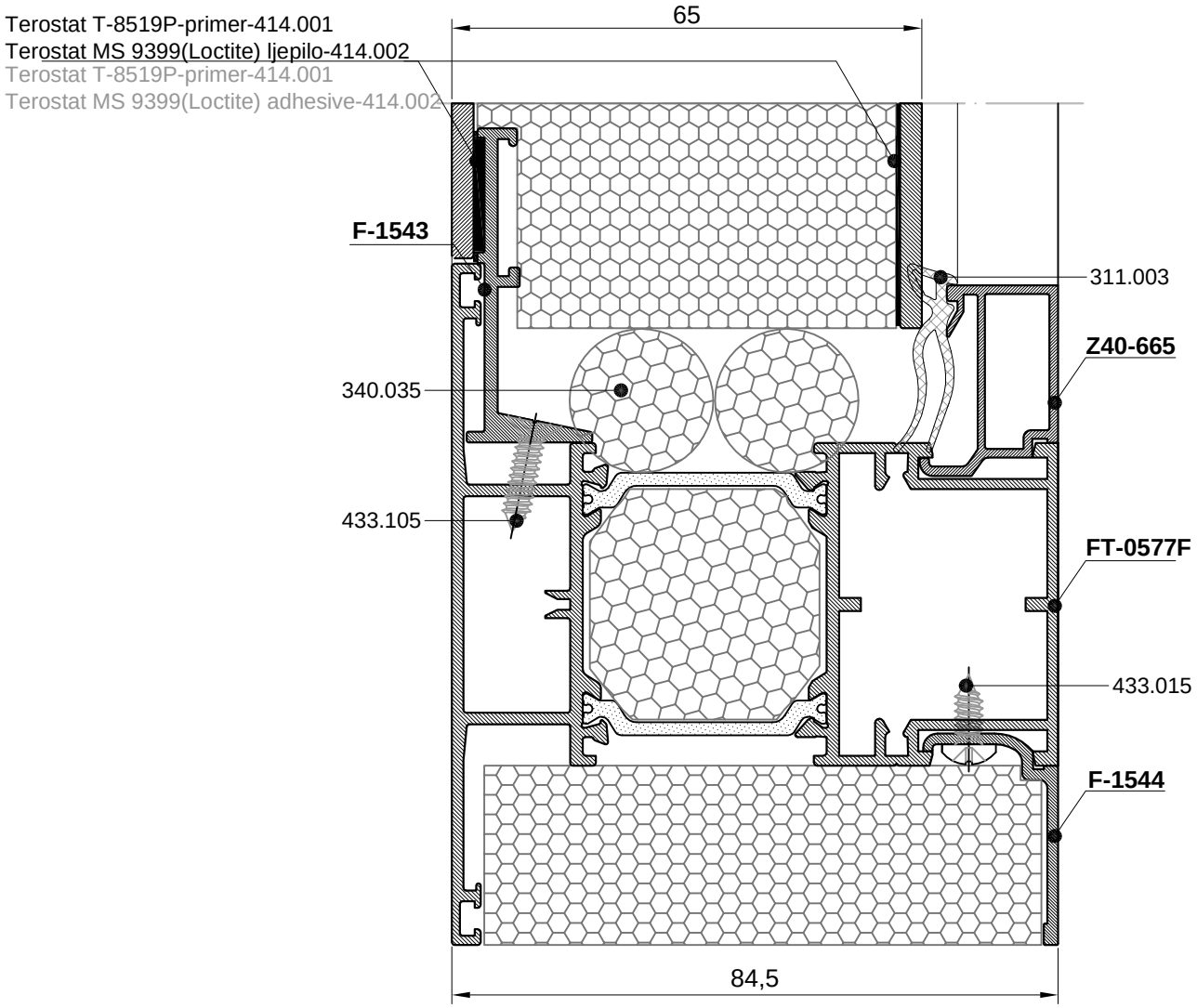
Terostat T-8519P-primer-414.001
Terostat MS 9399(Loctite) ljepilo-414.002
Terostat T-8519P-primer-414.001
Terostat MS 9399(Loctite) adhesive-414.002
65
F-1543
311.003
Z40-665
340.035
433.105
FT-0577F
433.015
F-1544
84,5

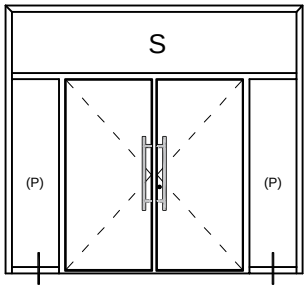
S
(P)
(P)

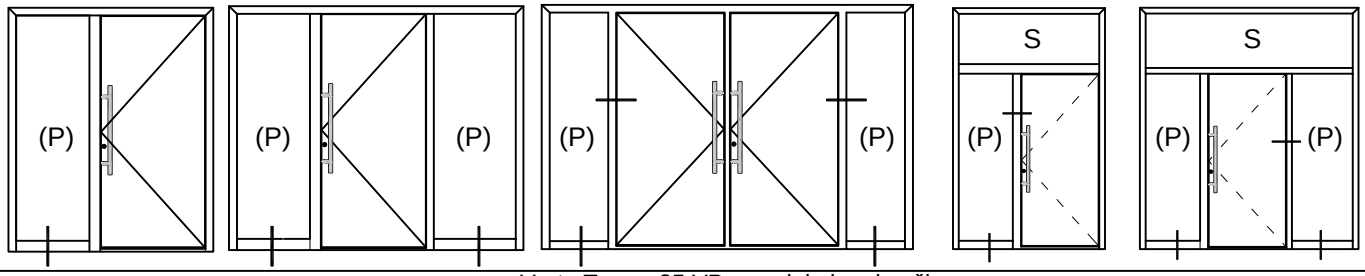
(P)
(P)
(P)
(P)
(P)
S
(P)
S
(P)
(P)

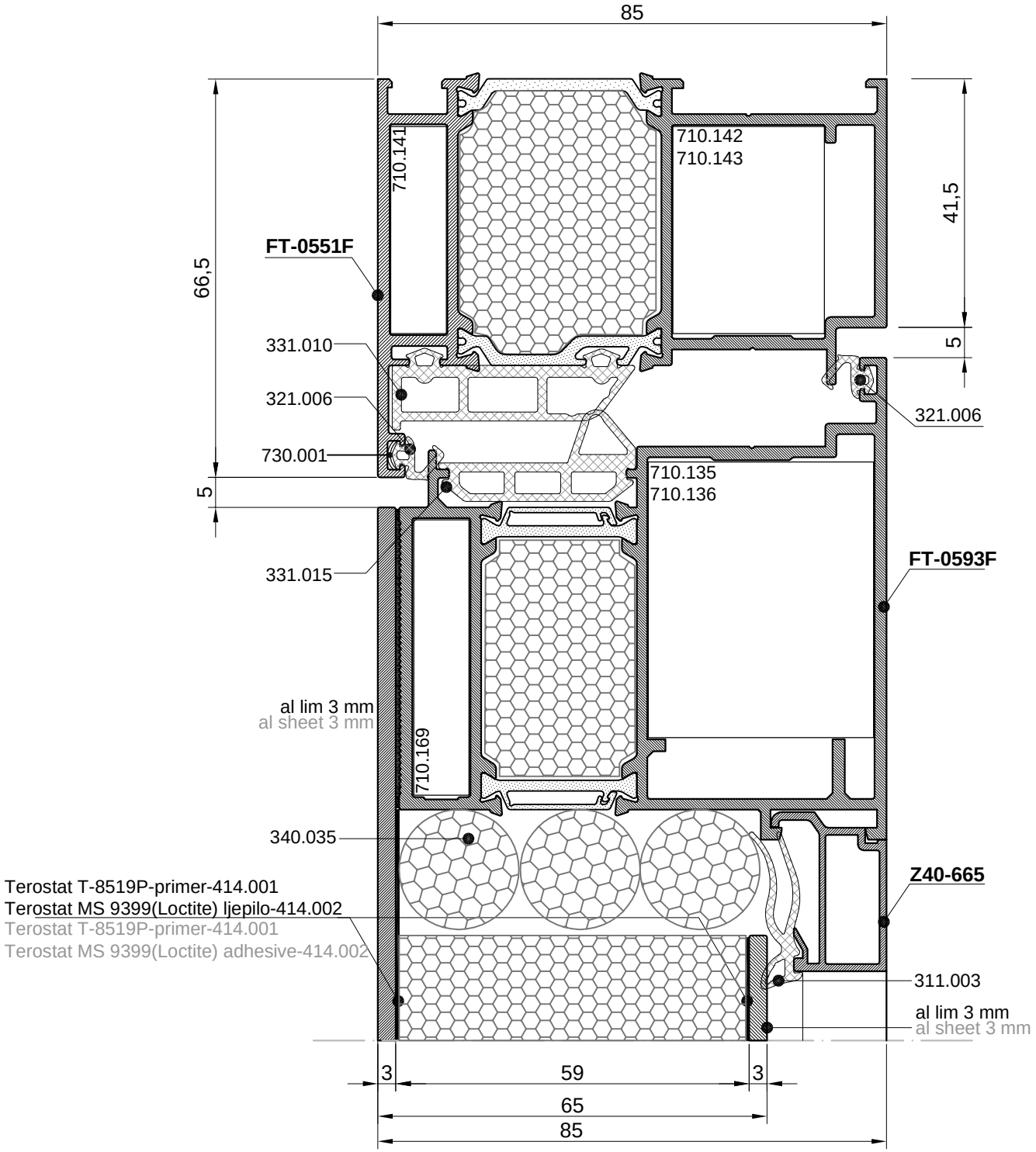

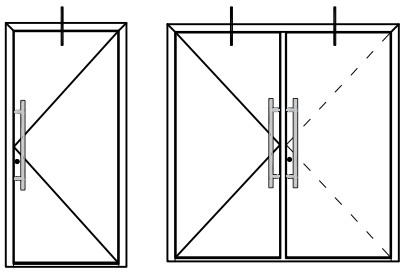

PRESJEK-11
CROSS SECTION-11

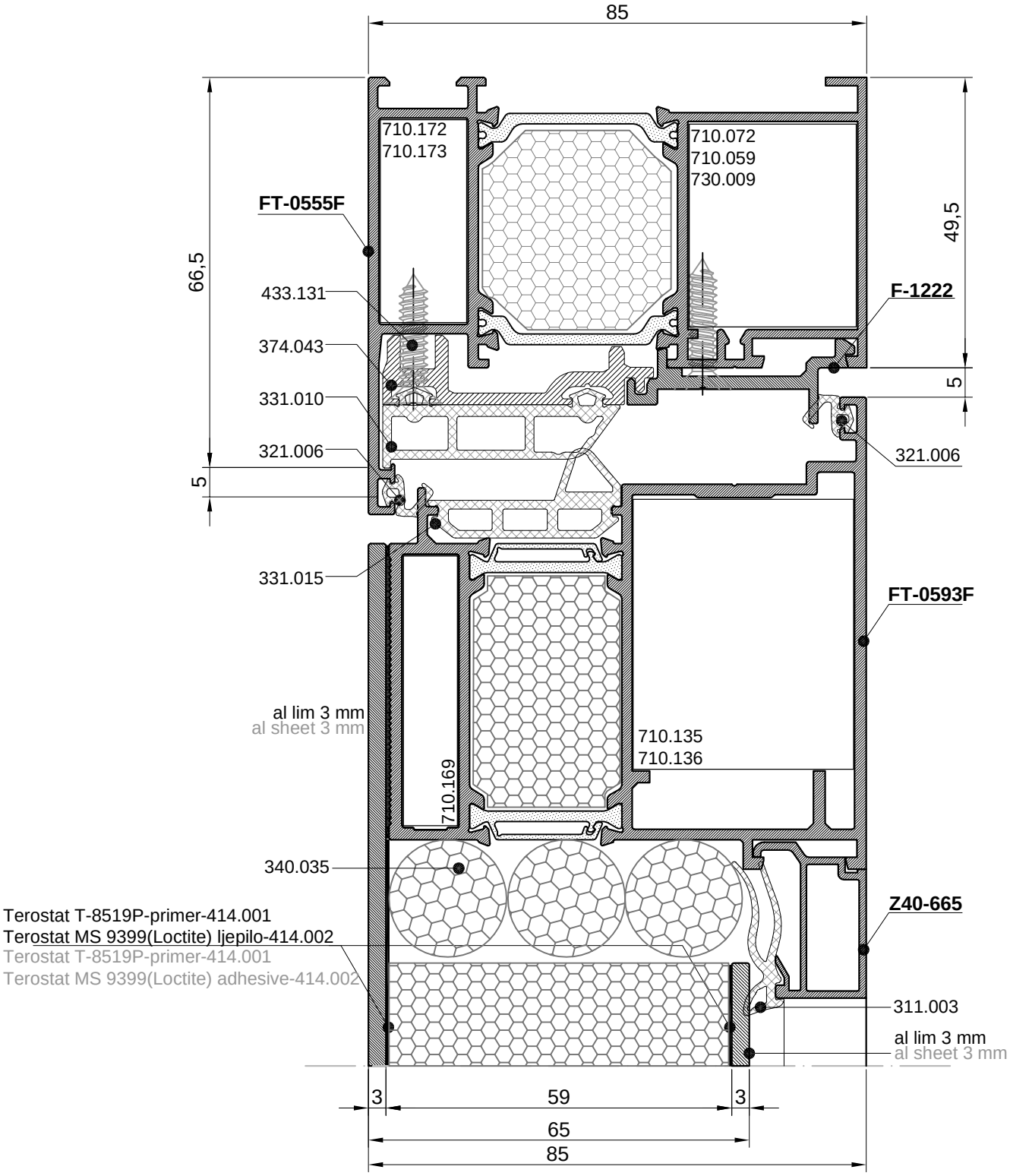

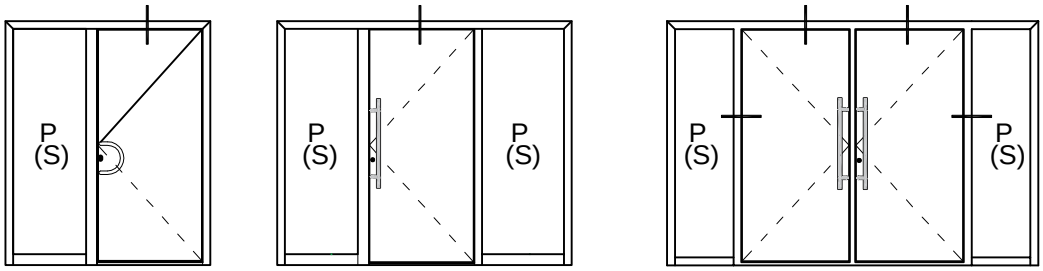

PRESJEK-12
CROSS SECTION-12

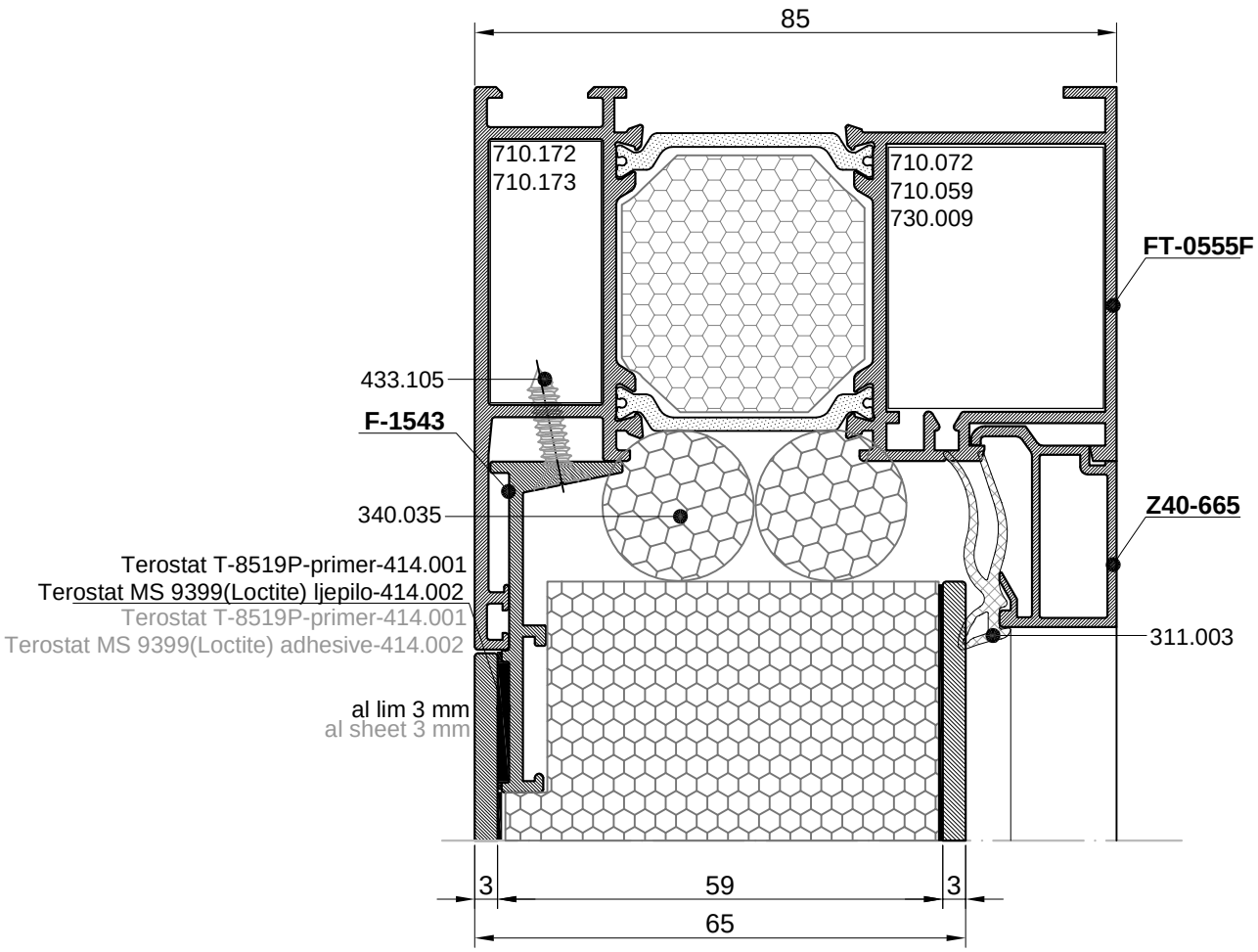

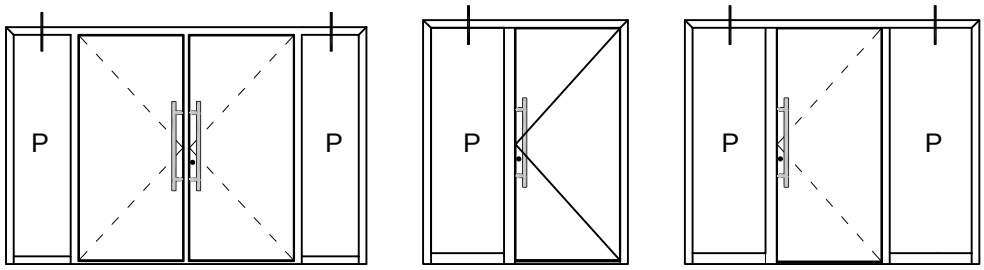

PRESJEK-13
CROSS SECTION-13

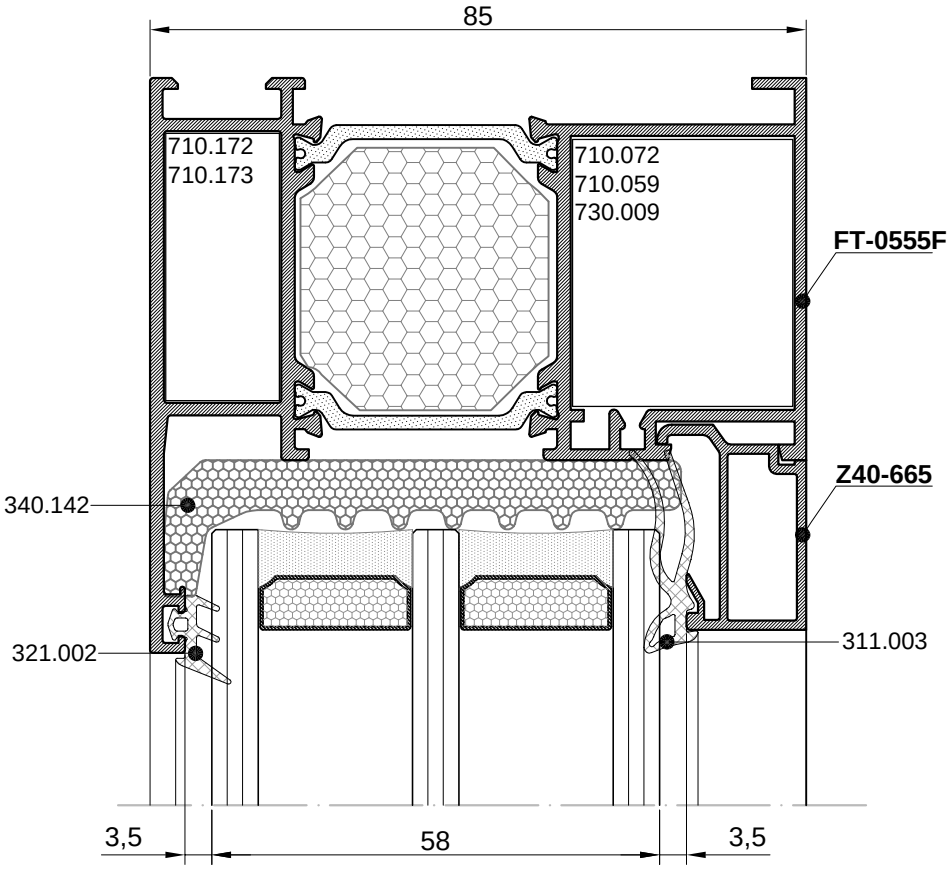

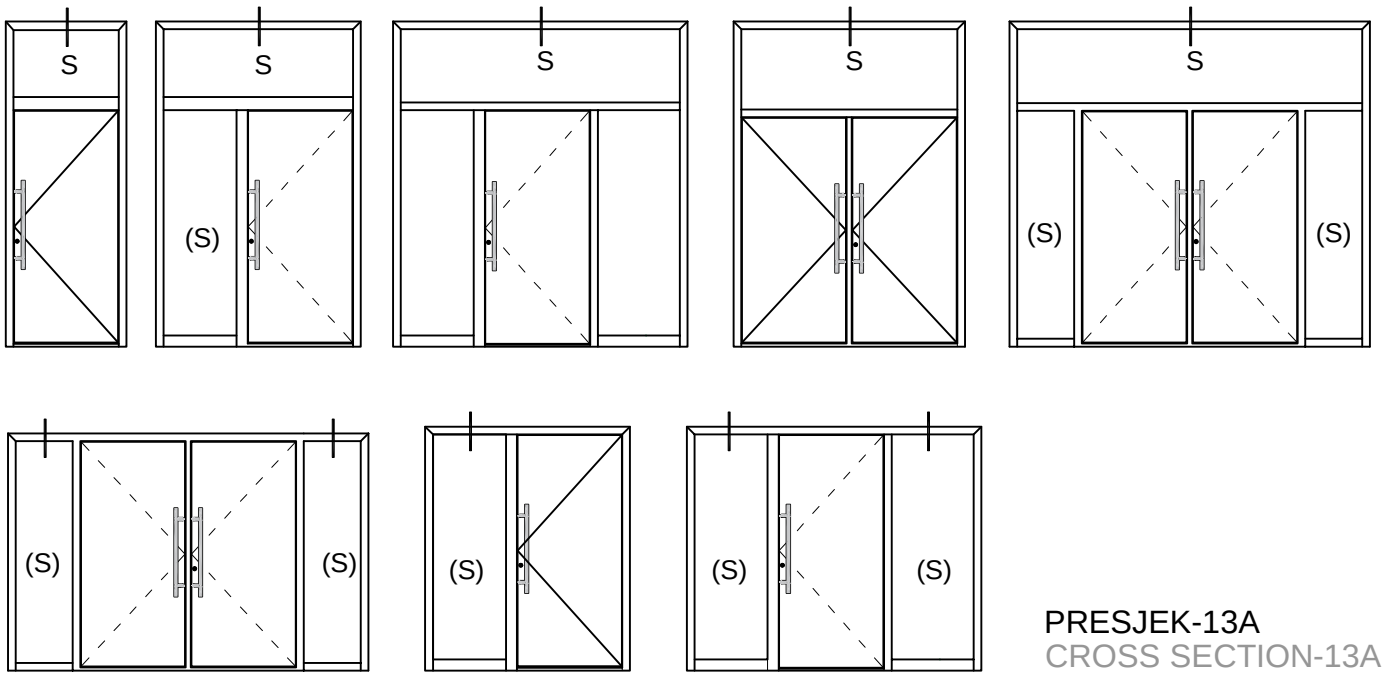

PRESJEK-13A
CROSS SECTION-13A

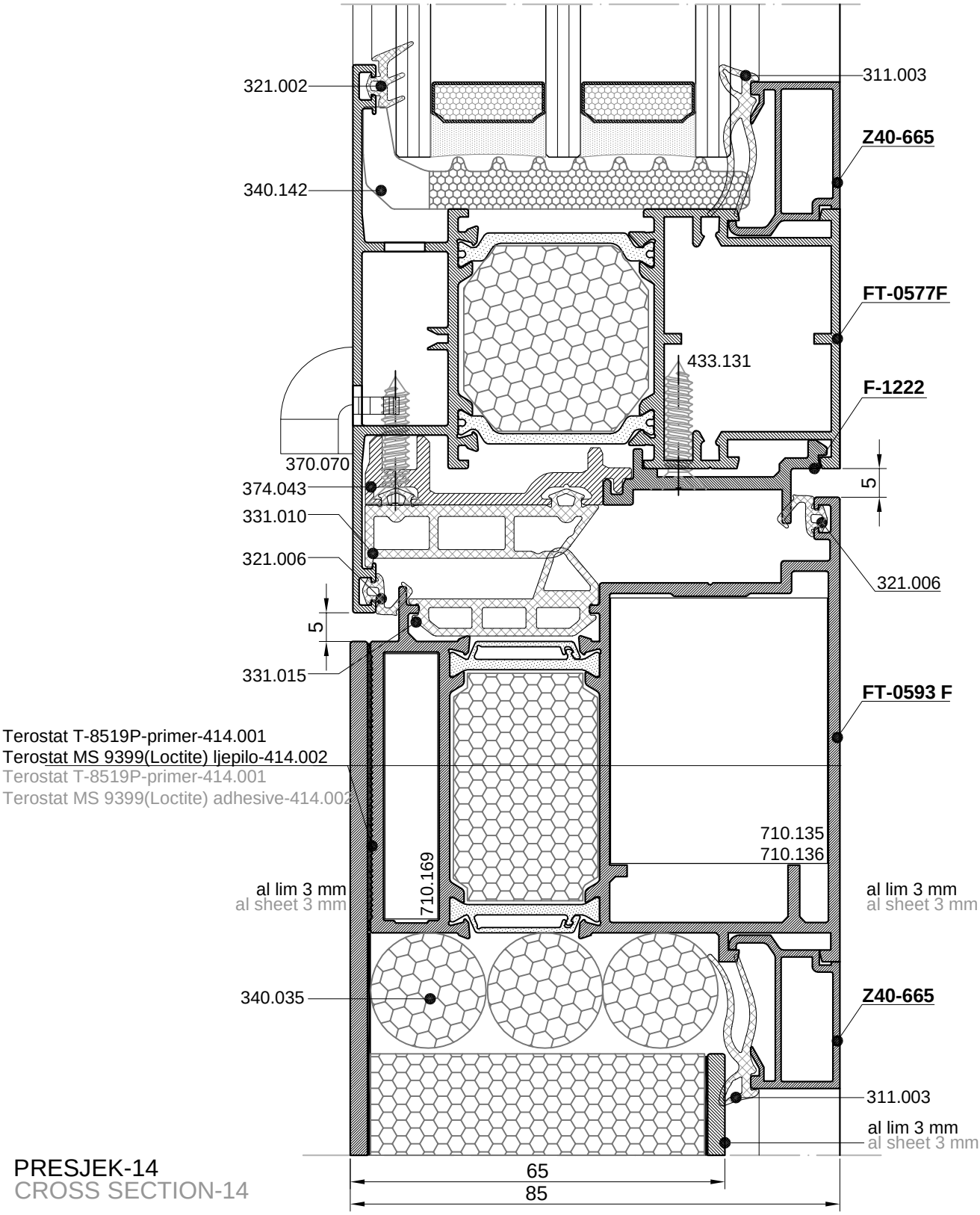

PRESJEK-14
CROSS SECTION-14

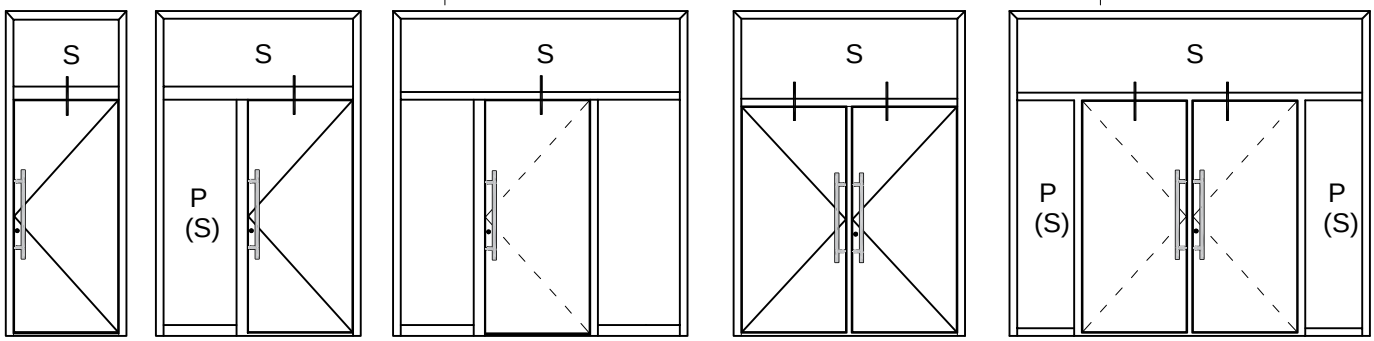

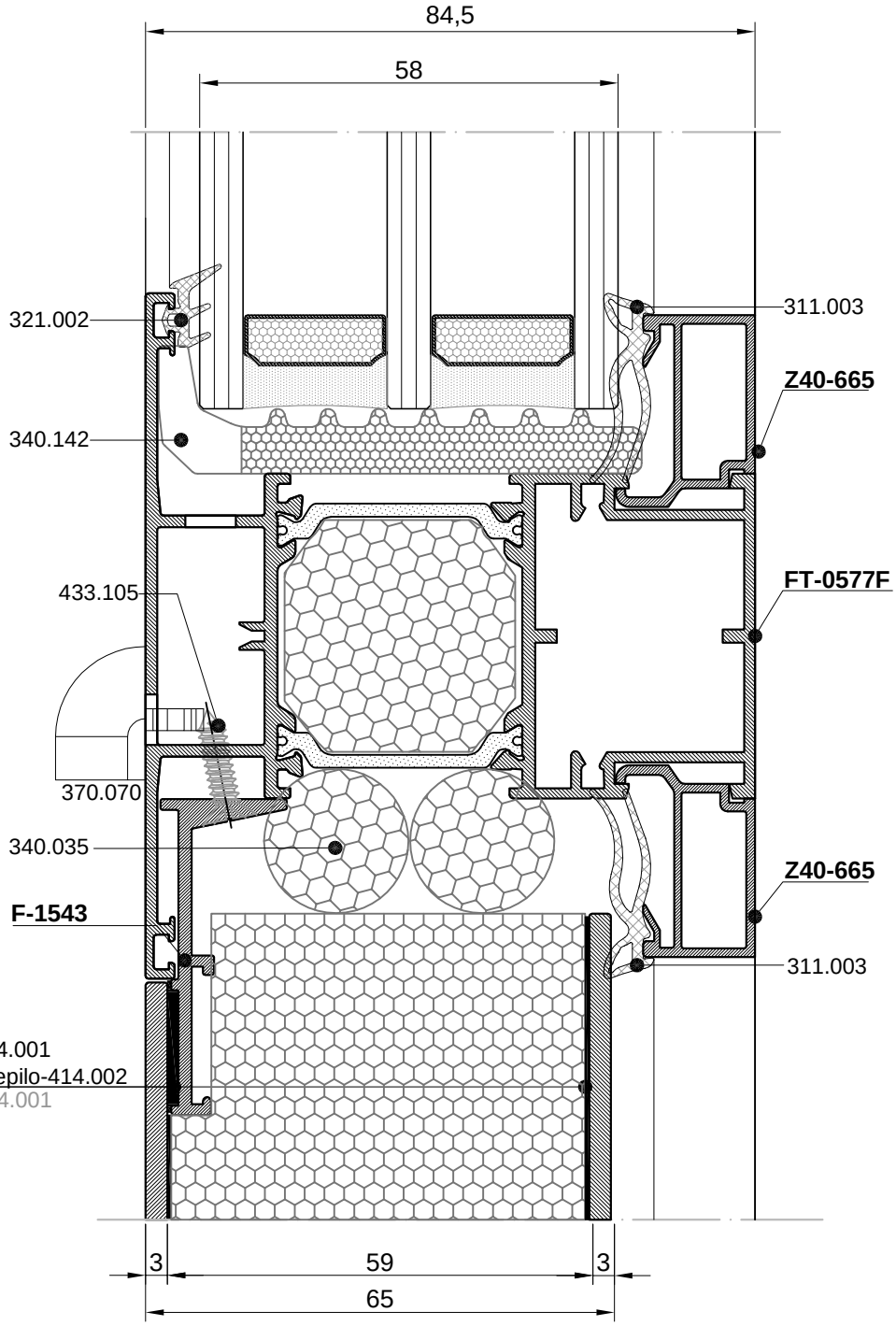

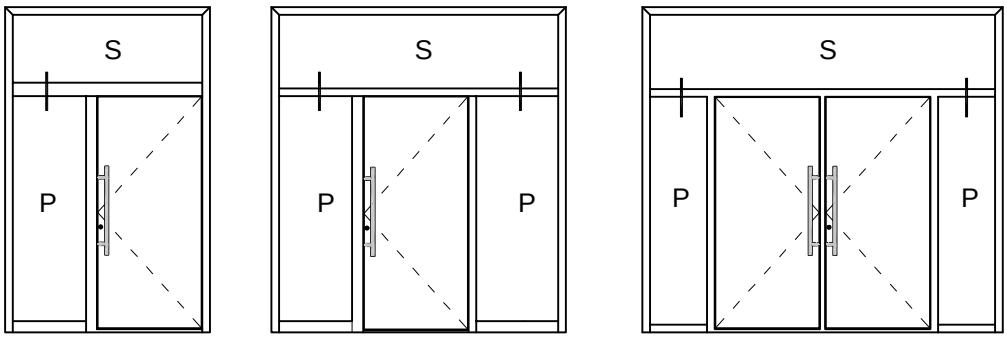

PRESJEK-15
CROSS SECTION-15

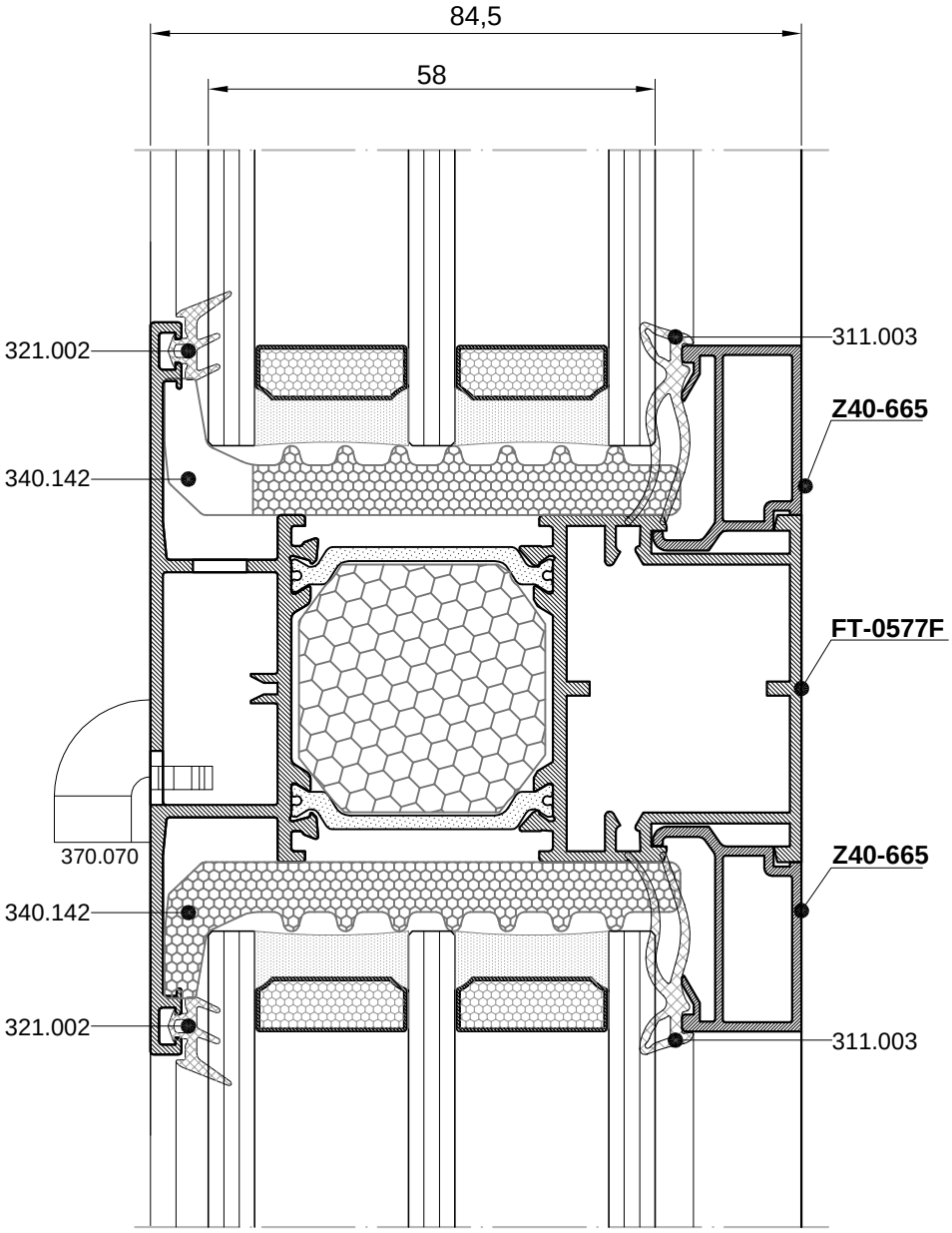

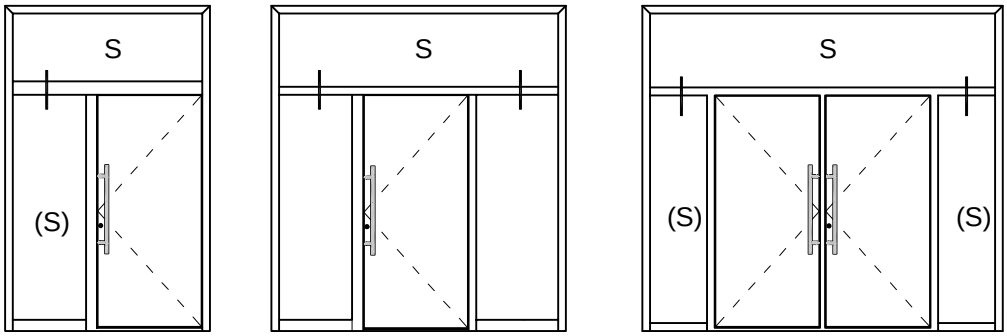

PRESJEK-15A
CROSS SECTION-15A

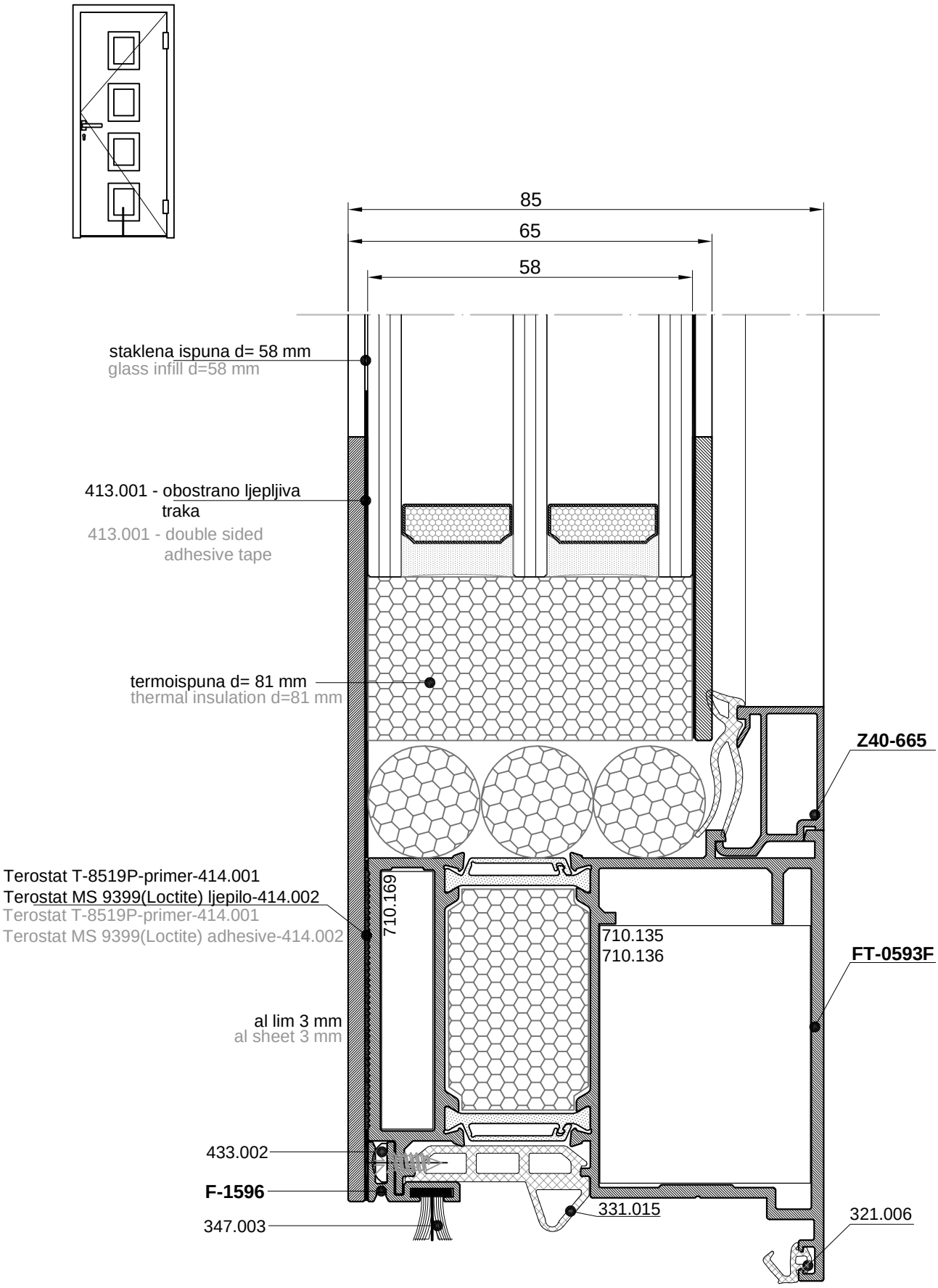
85
65
58
staklena ispuna d= 58 mm
glass infill d=58 mm
413.001 - obostrano ljepljiva traka
413.001 - double sided adhesive tape
termoispuna d= 81 mm
thermal insulation d=81 mm
Z40-665
Terostat T-8519P-primer-414.001
Terostat MS 9399(Loctite) ljepilo-414.002
Terostat T-8519P-primer-414.001
Terostat MS 9399(Loctite) adhesive-414.002
710.169
710.135
710.136
FT-0593F
al lim 3 mm
al sheet 3 mm
433.002
F-1596
347.003
331.015
321.006

-vrata Termo 85 VP otvaranje unutra-
-obostrano lim-

-door Termo 85 VP inside opening-
-both side sash-

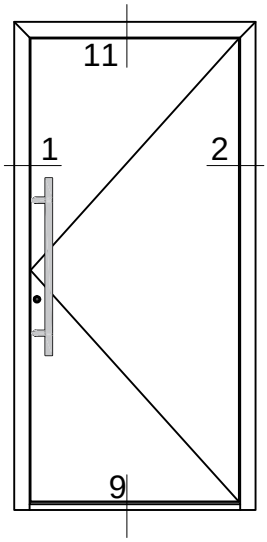
11
1
2
9

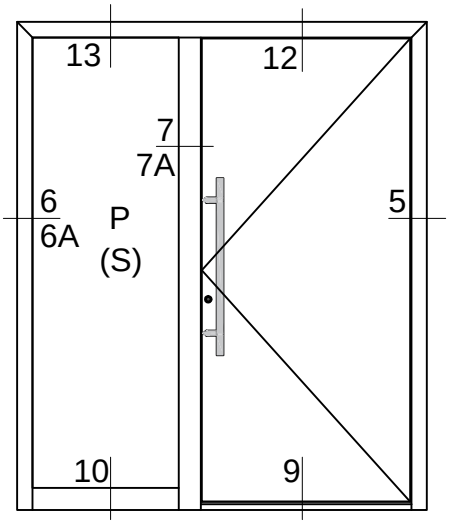
13
12
7
7A
6
6A
P
(S)
5
10
9

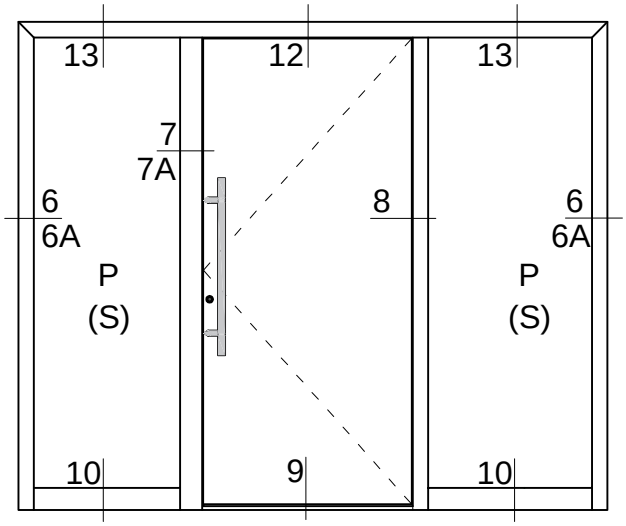
13
12
13
7
7A
6
6A
P
(S)
8
6
6A
P
(S)
10
9
10

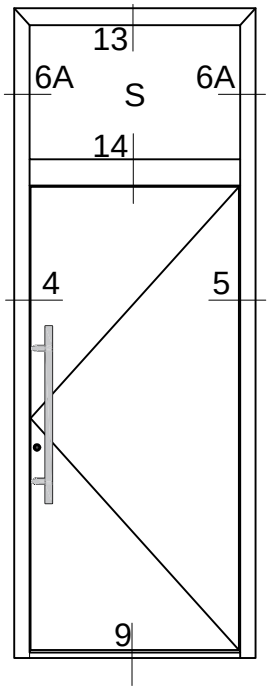
13
6A
S
6A
14
4
5
9

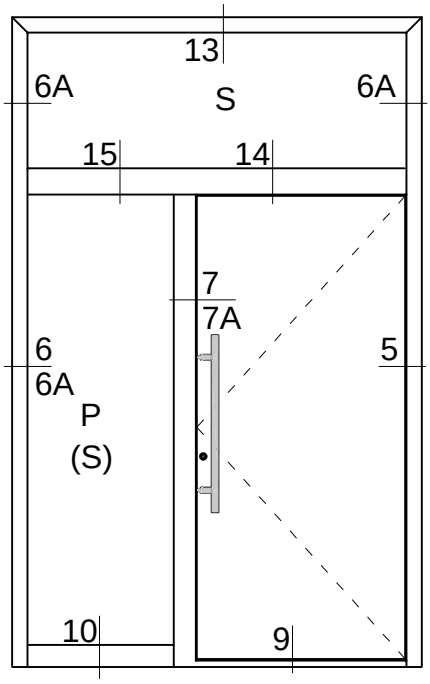
13
6A
S
6A
15
14
7
7A
6
6A
P
(S)
5
10
9

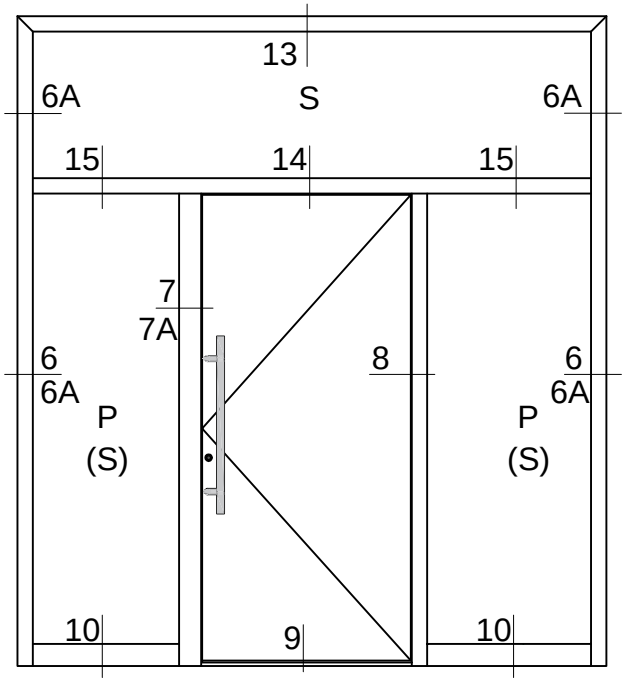
13
6A
S
6A
15
14
15
7
7A
6
6A
P
(S)
8
6
6A
P
(S)
10
9
10

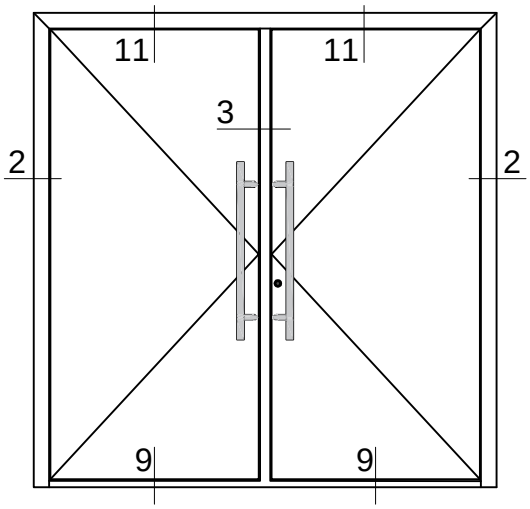
11
11
3
2
2
9
9

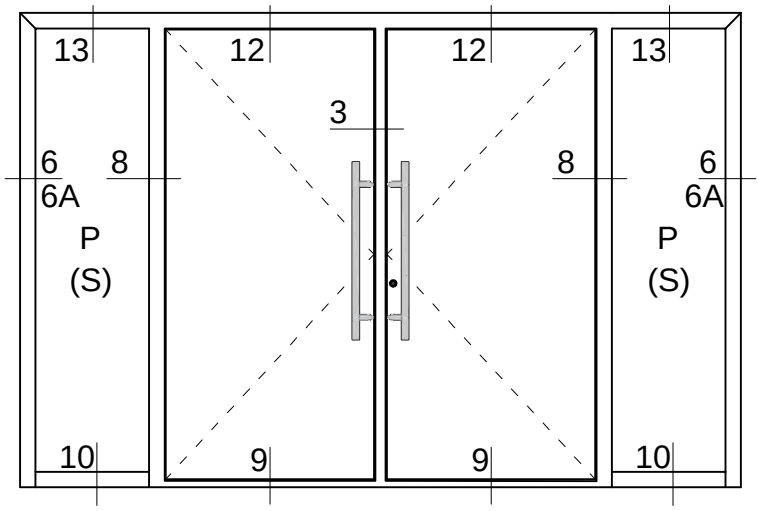
13
12
12
13
3
6
6A
8
8
6
6A
P
(S)
P
(S)
10
9
9
10

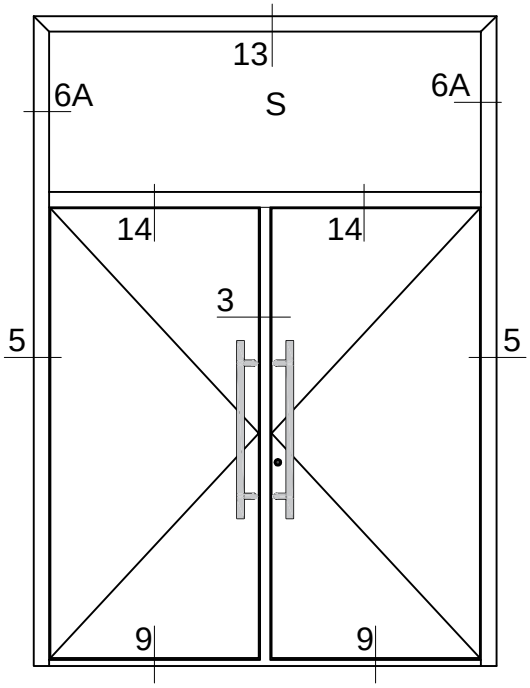
13
6A
S
6A
14
14
3
5
5
9
9

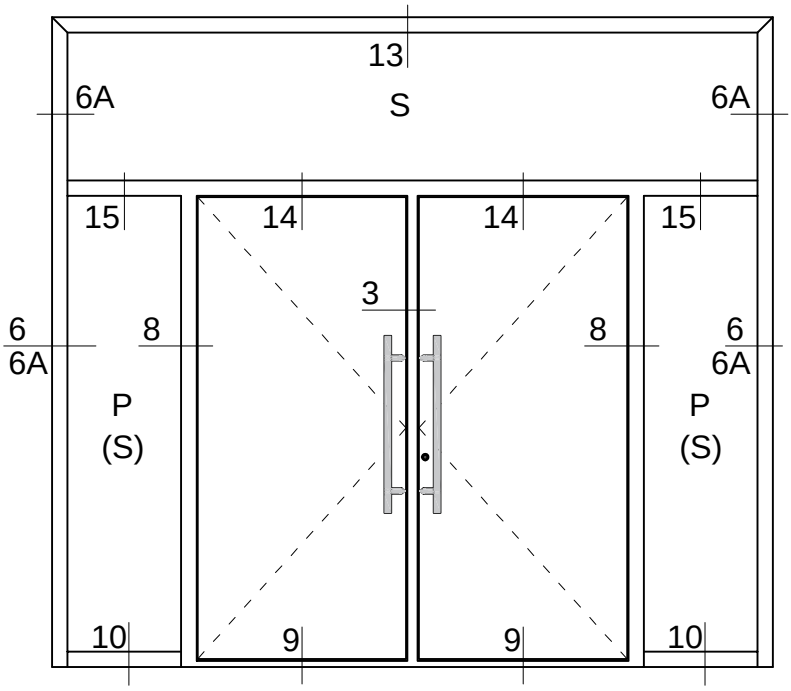
13
6A
S
6A
15
14
14
15
3
6
6A
8
8
6
6A
P
(S)
P
(S)
10
9
9
10

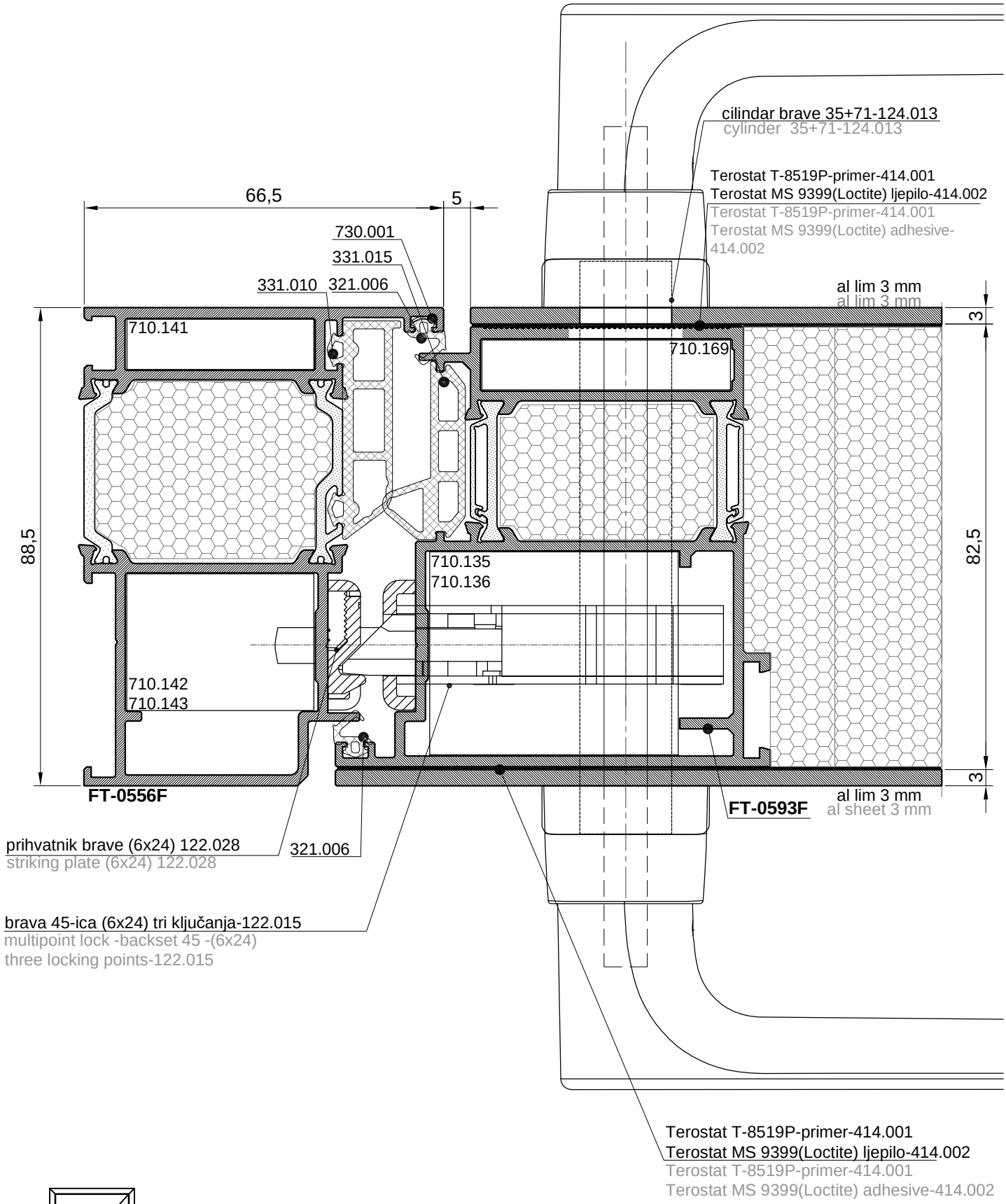

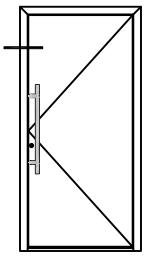

PRESJEK-1
CROSS SECTION-1

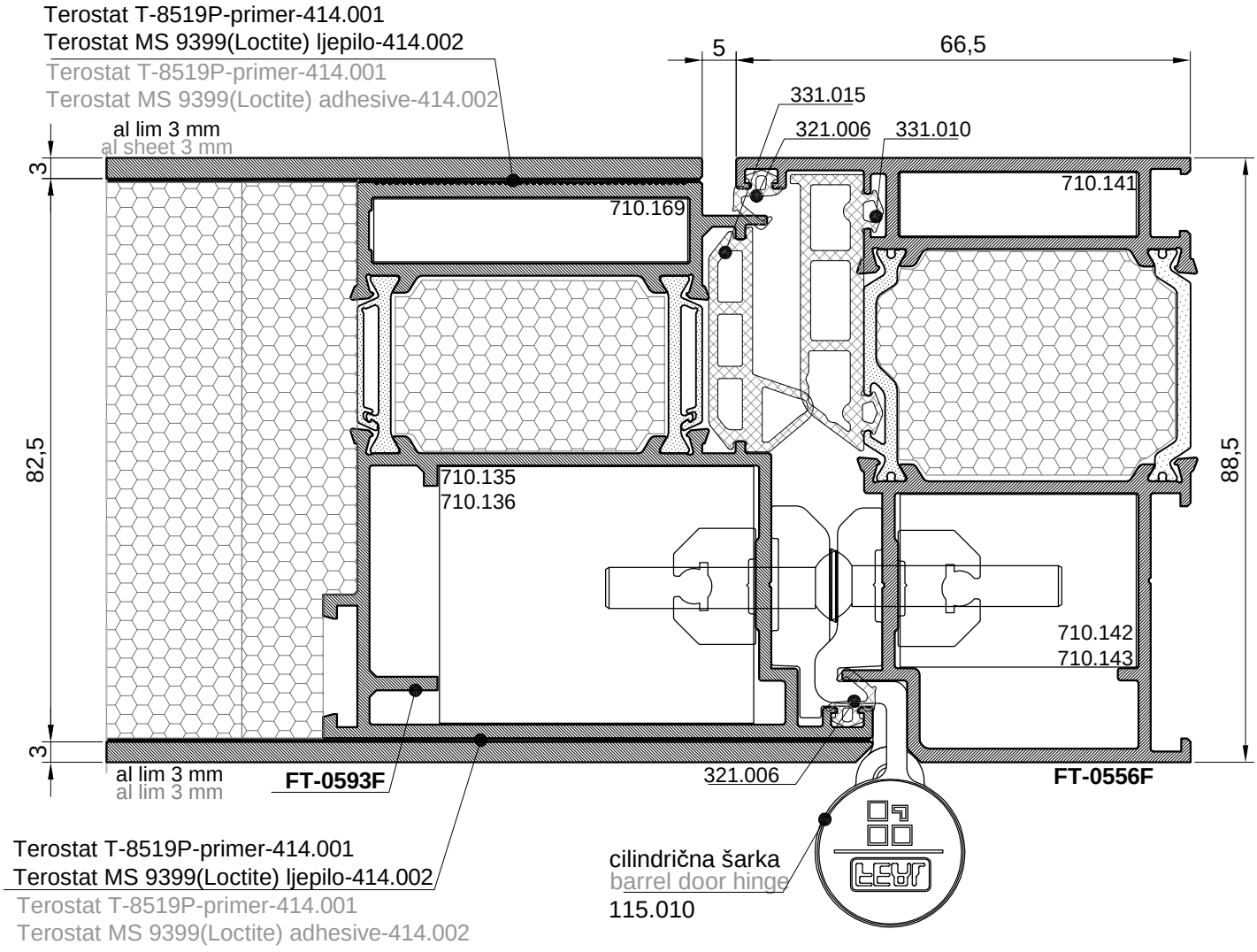

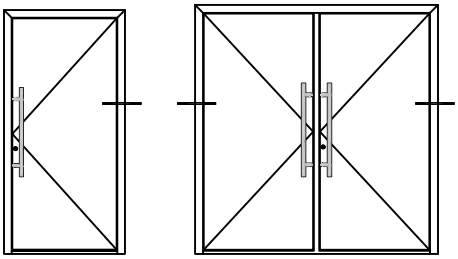

PRESJEK-2
CROSS SECTION-2

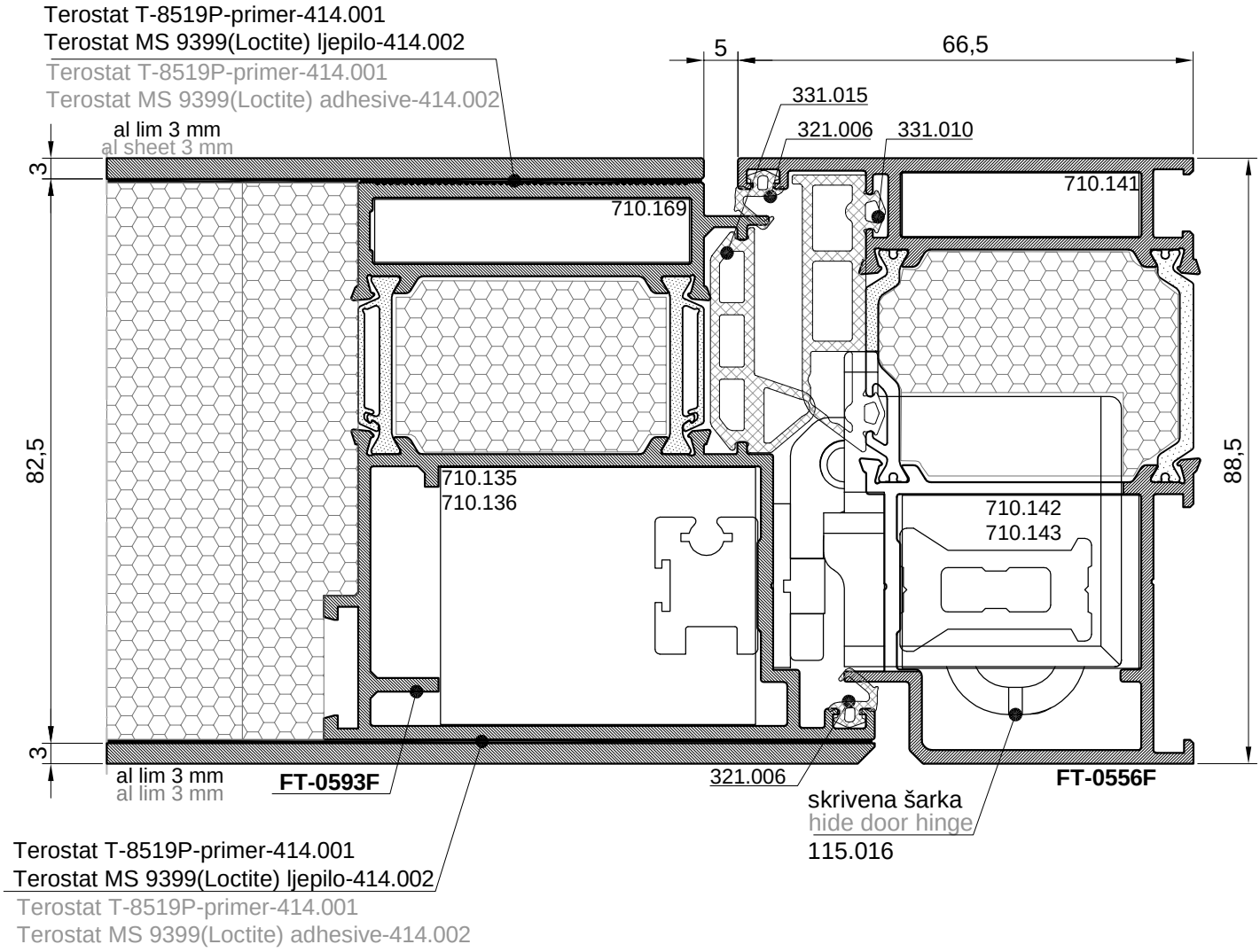

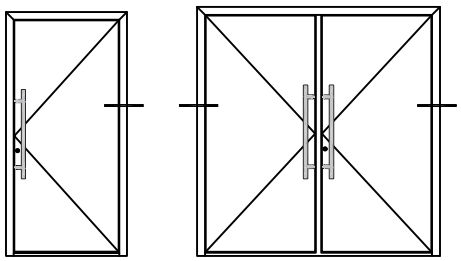

PRESJEK-2
CROSS SECTION-2

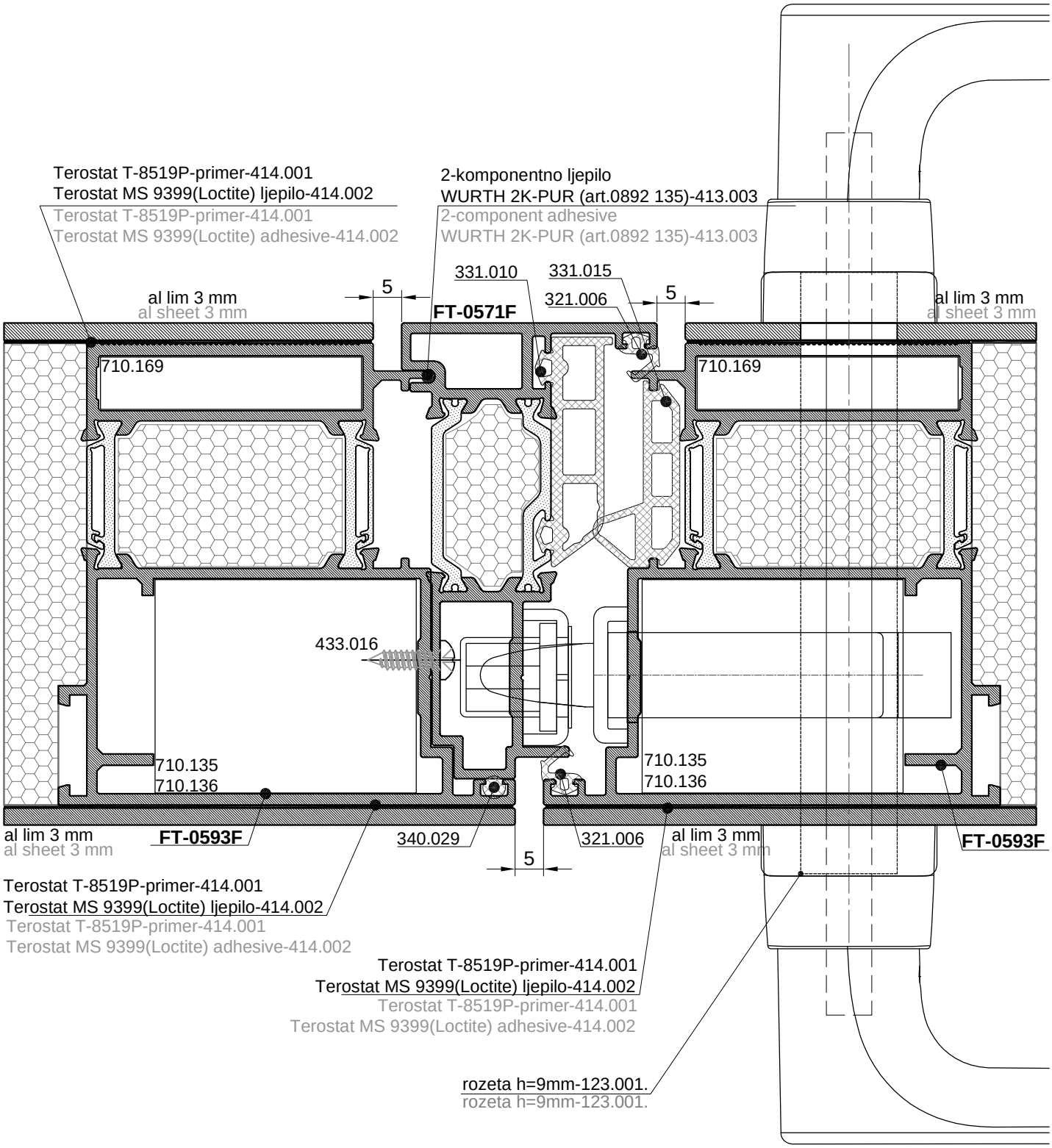

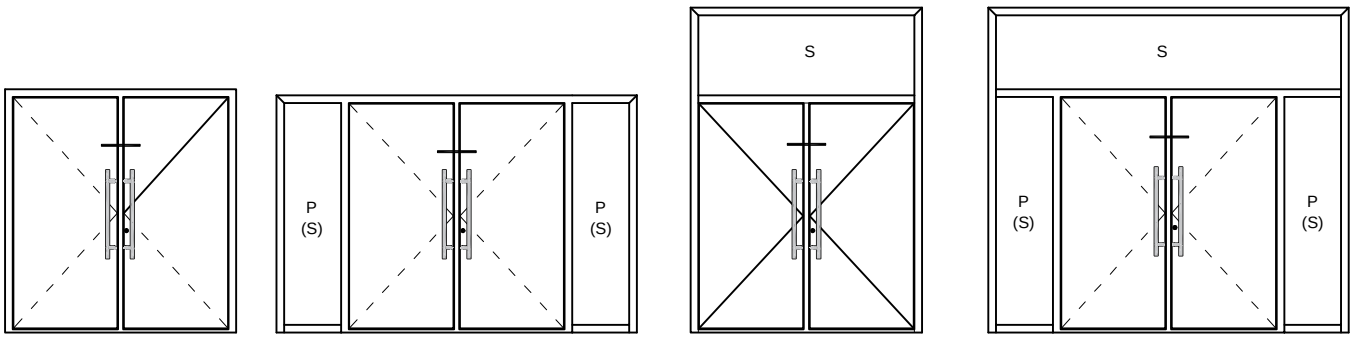

PRESJEK-3
CROSS SECTION-3

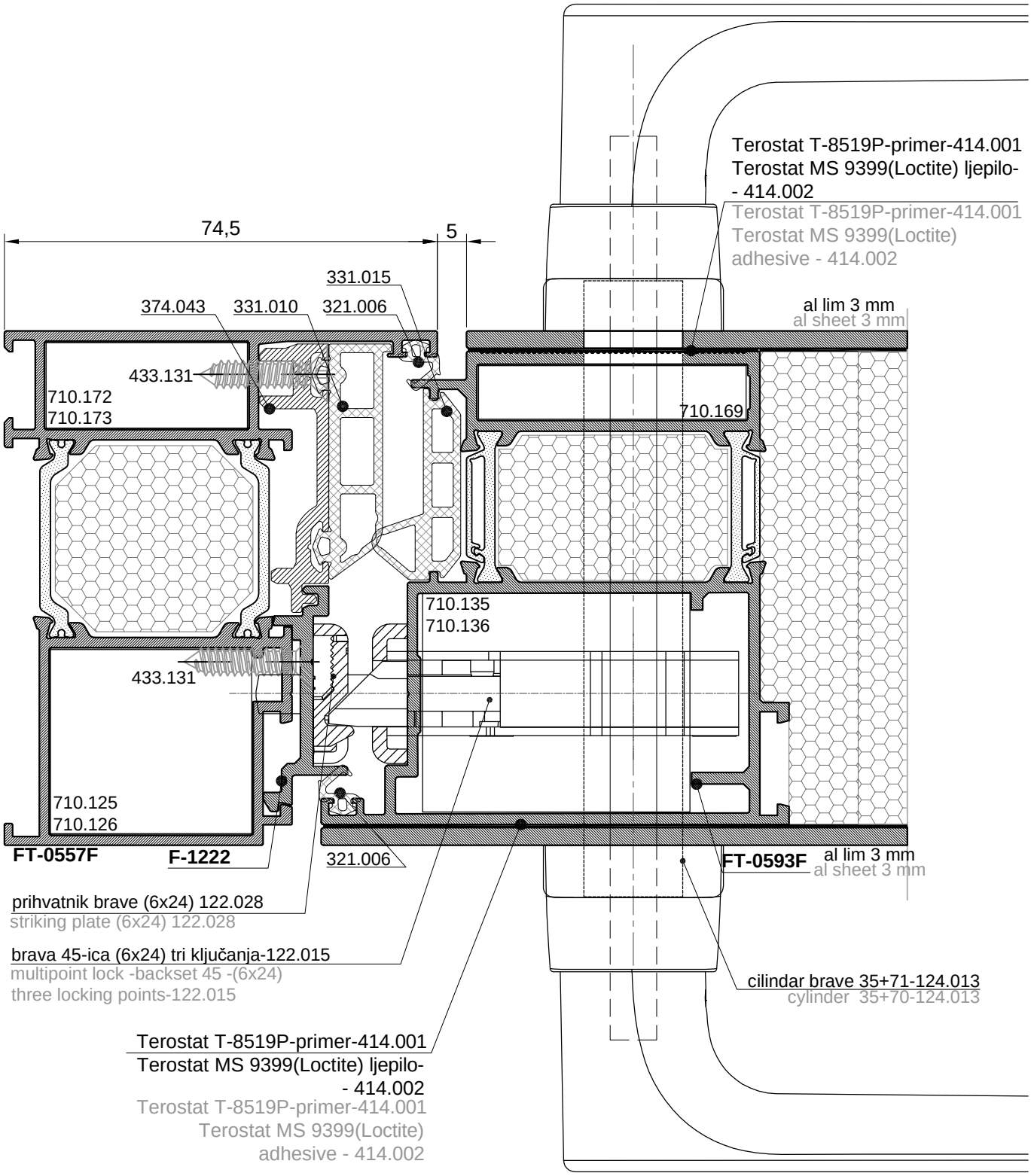

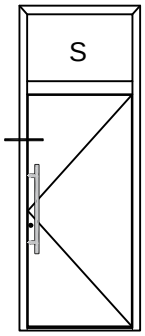

PRESJEK-4
CROSS SECTION-4

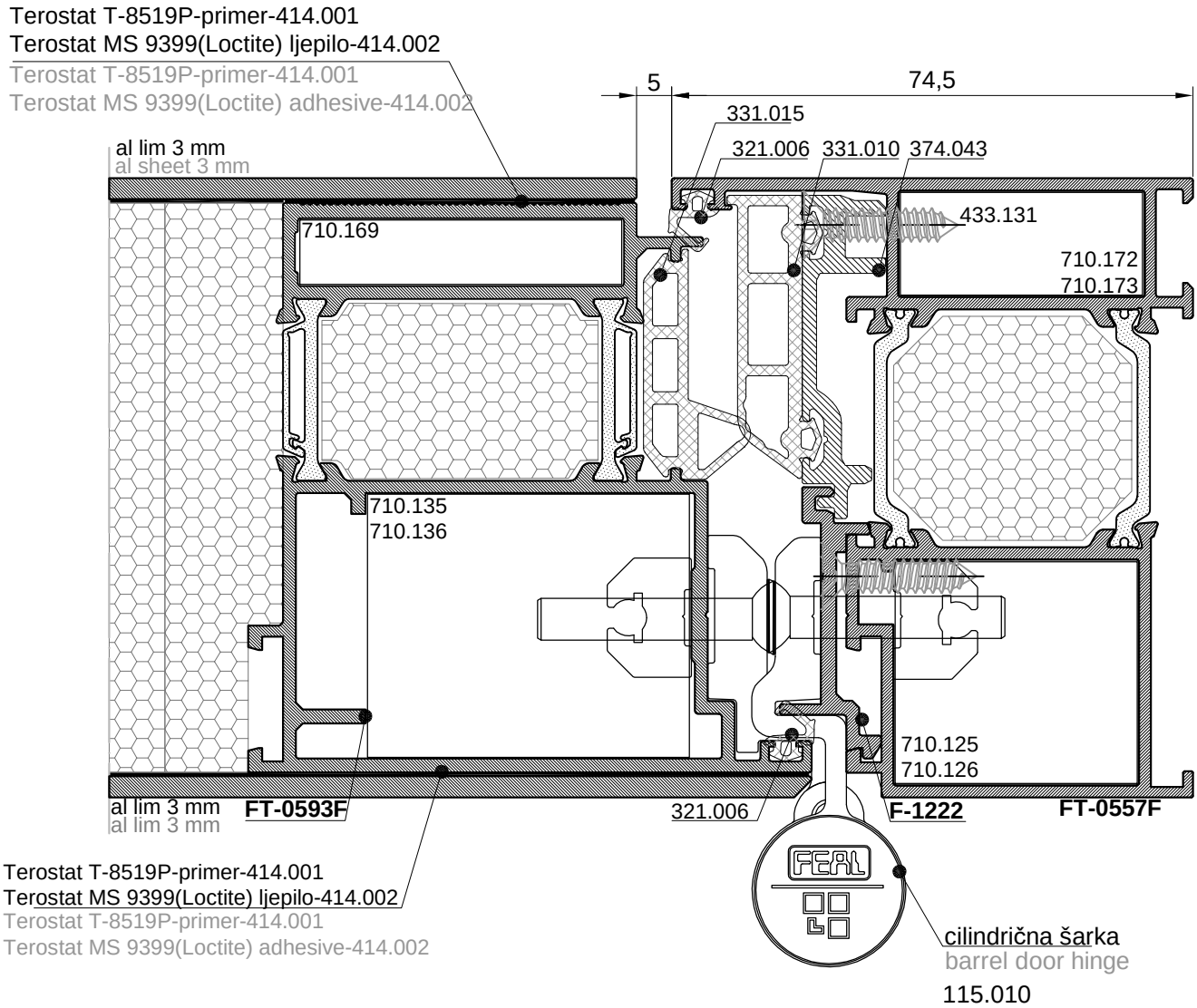

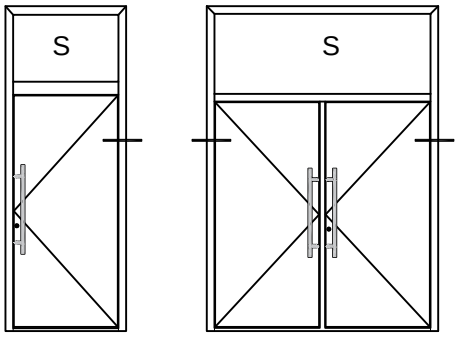

PRESJEK-5
CROSS SECTION-5

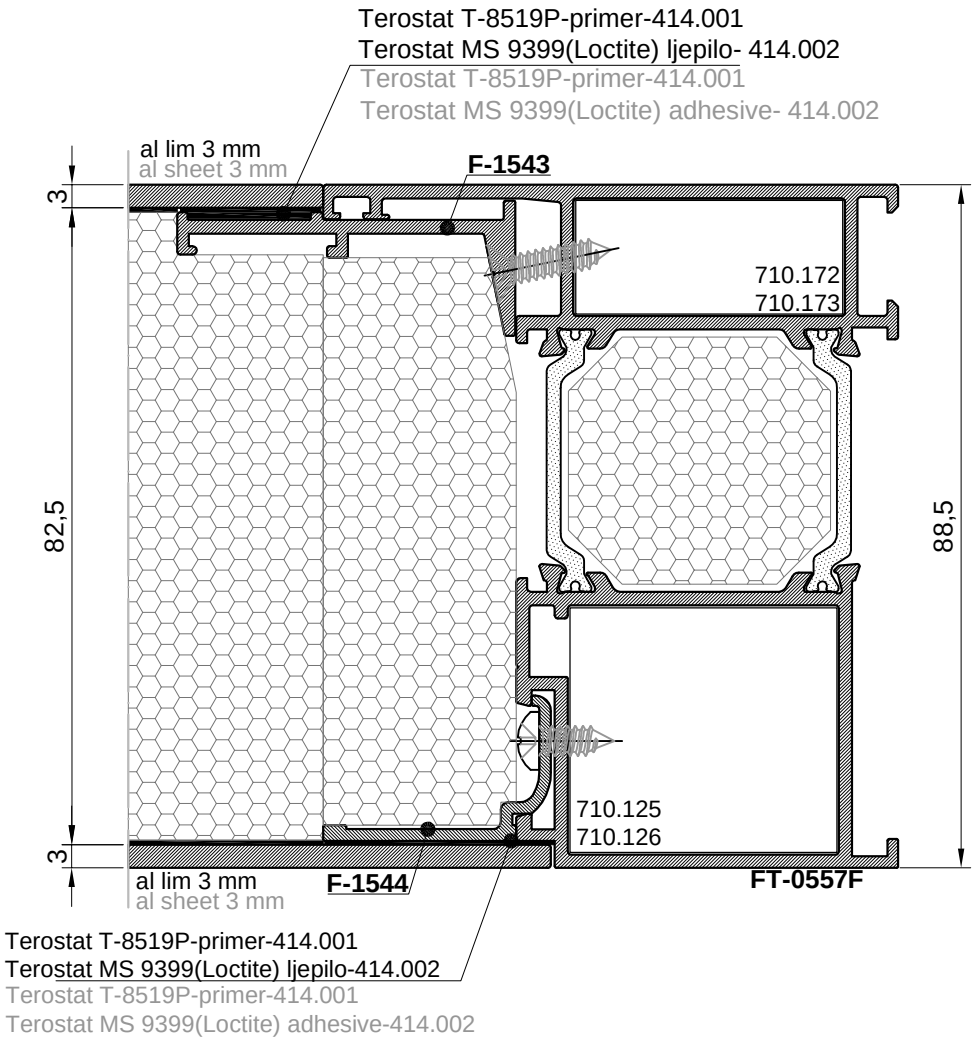

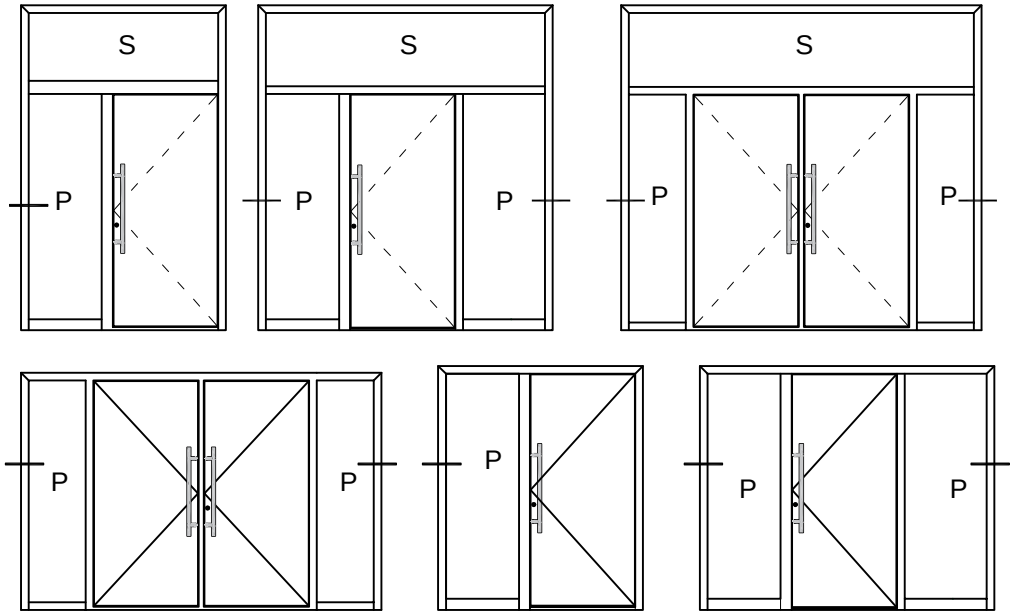

PRESJEK-6
CROSS SECTION-6

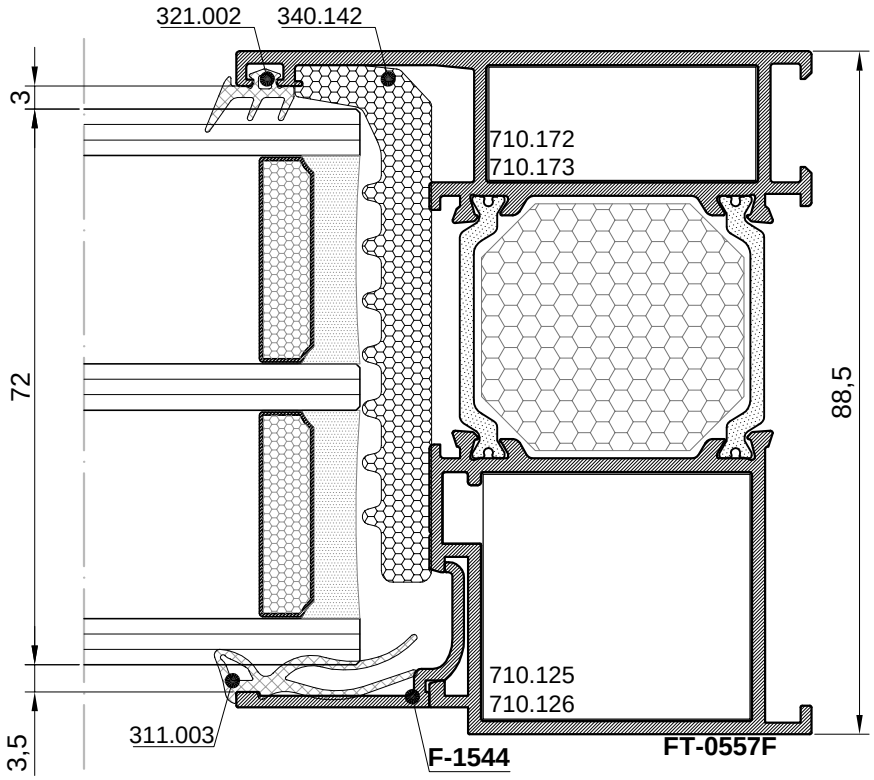

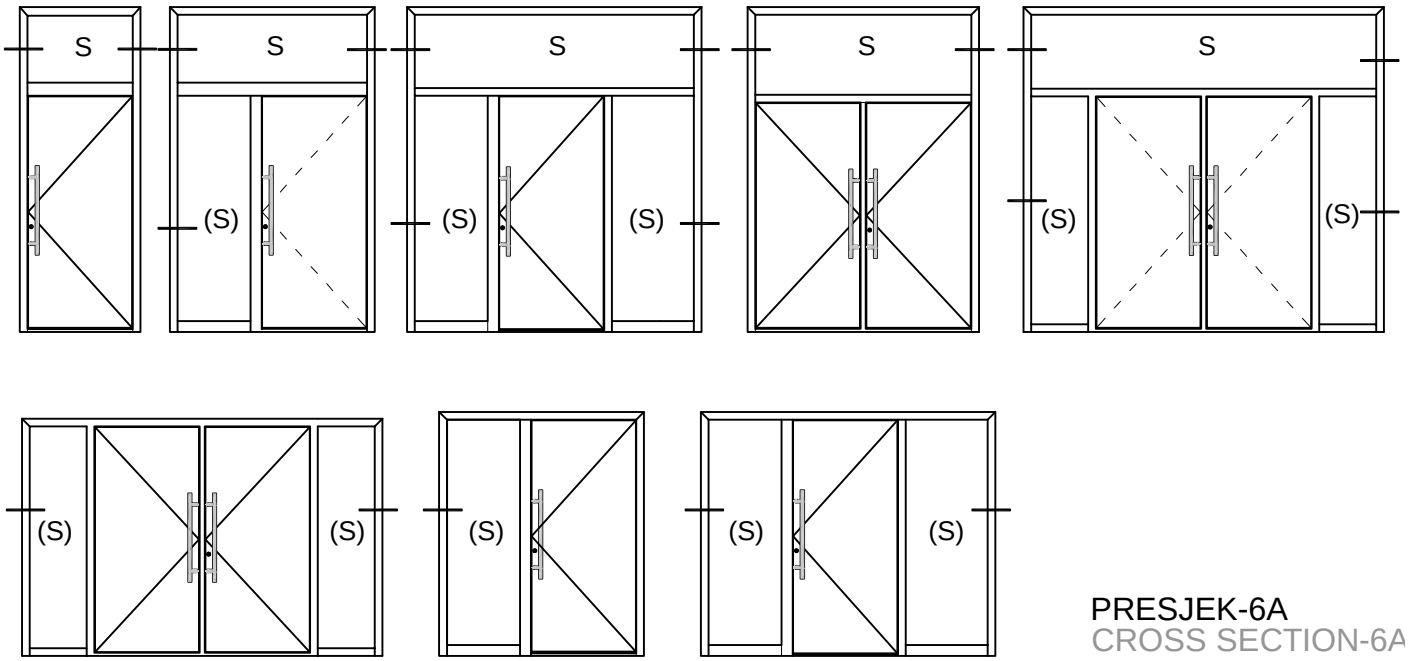

PRESJEK-6A
CROSS SECTION-6A

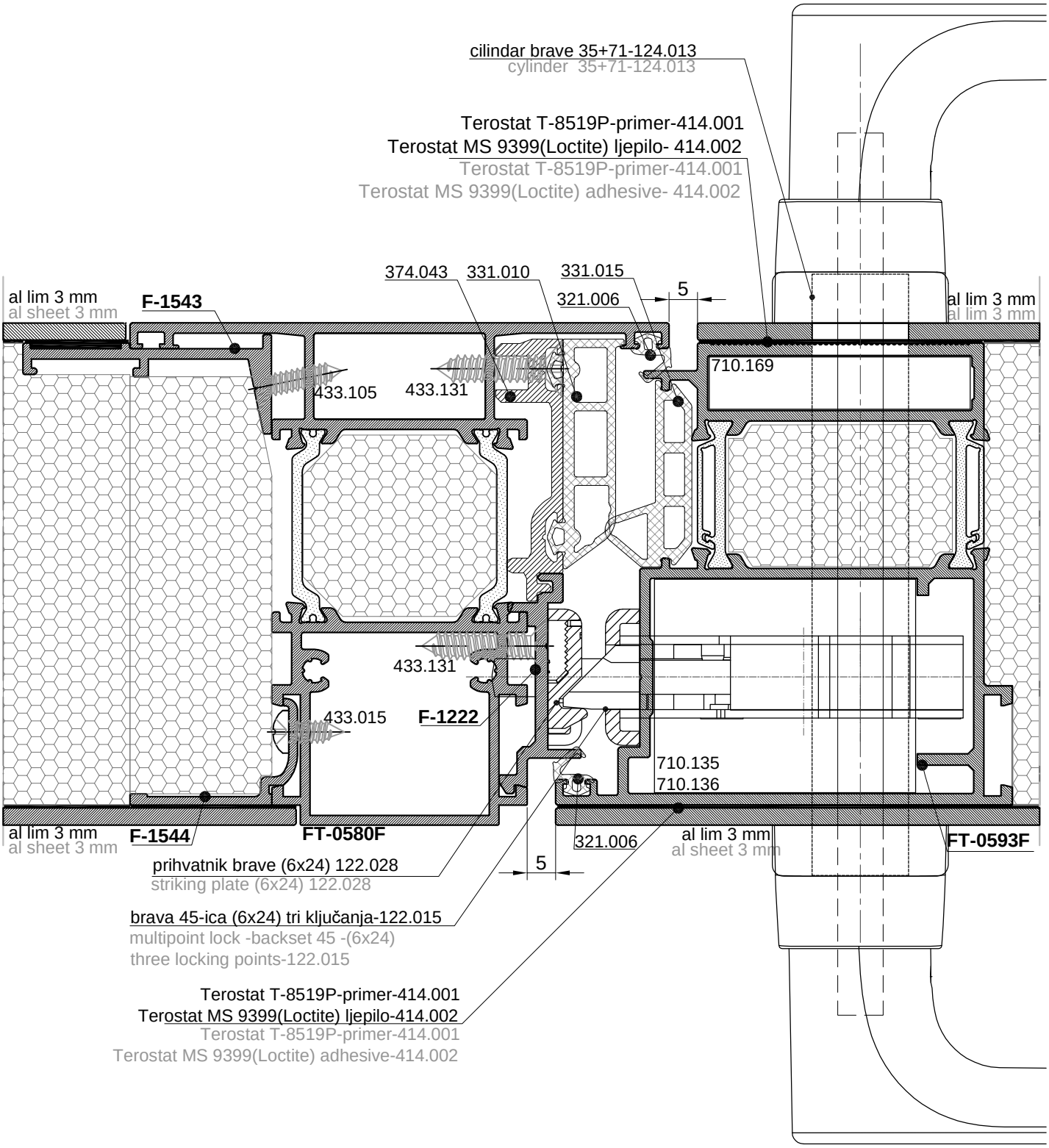

PRESJEK-7
CROSS SECTION-7

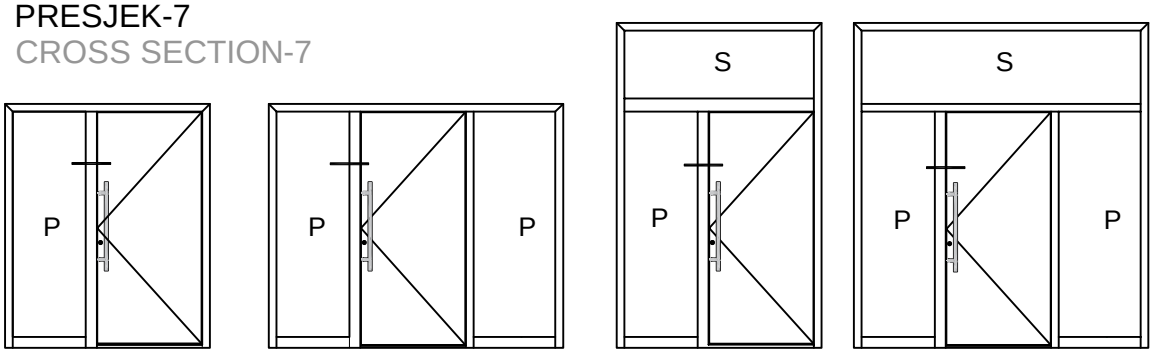

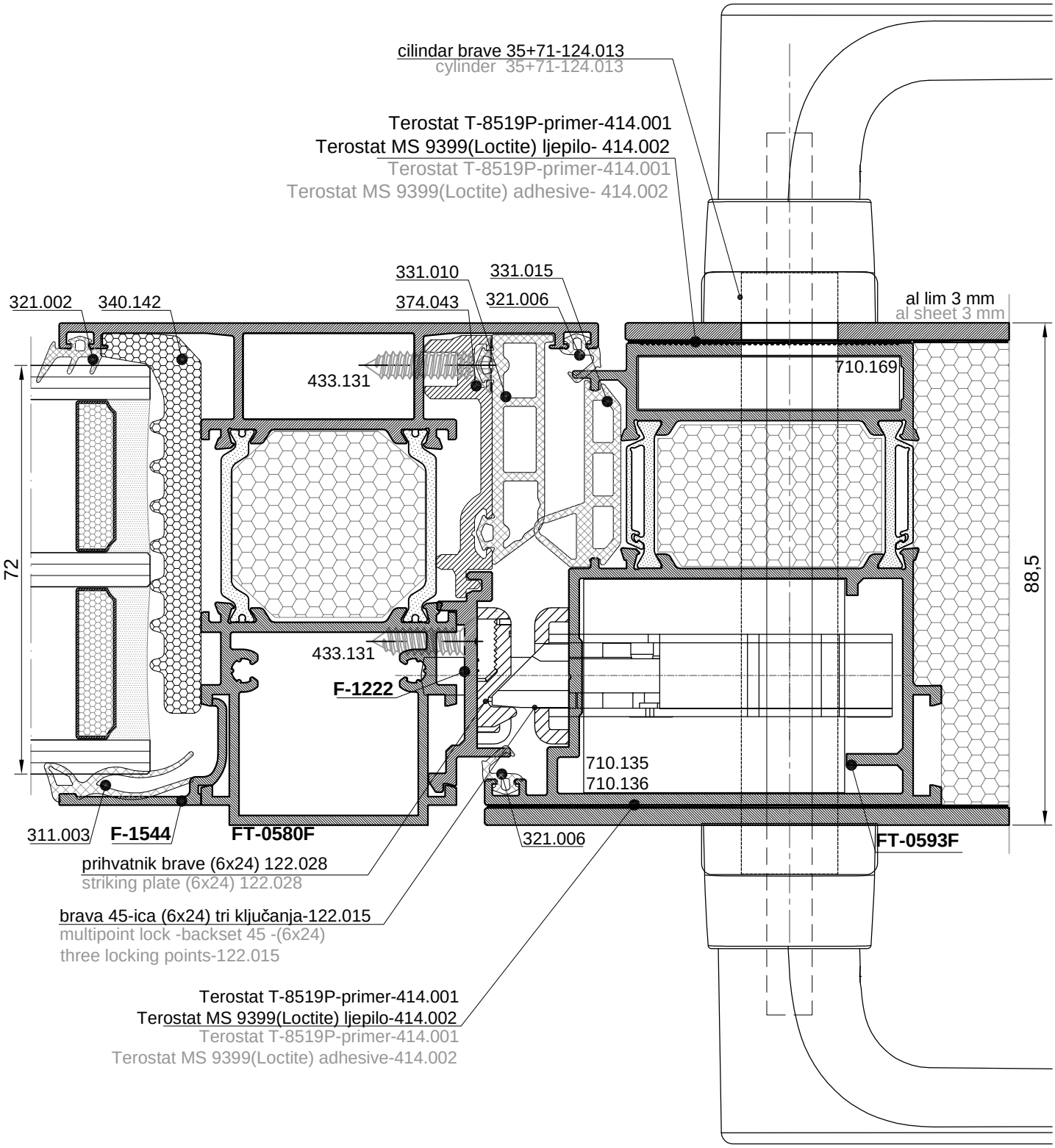

PRESJEK-7A
CROSS SECTION-7A

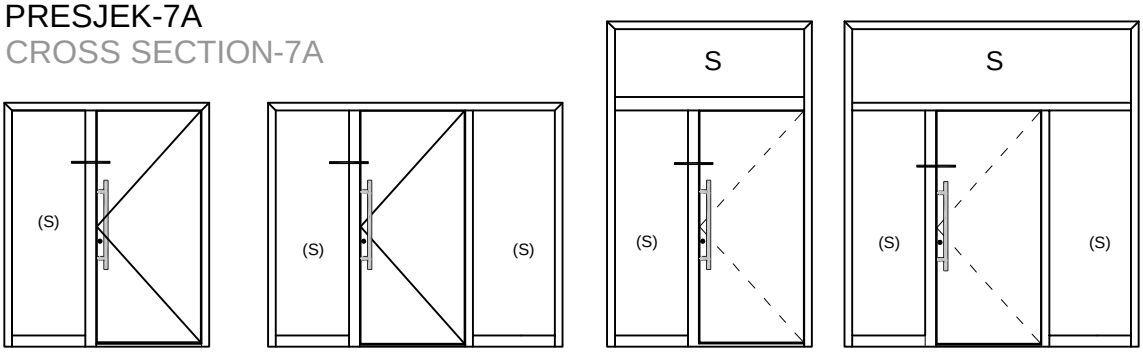

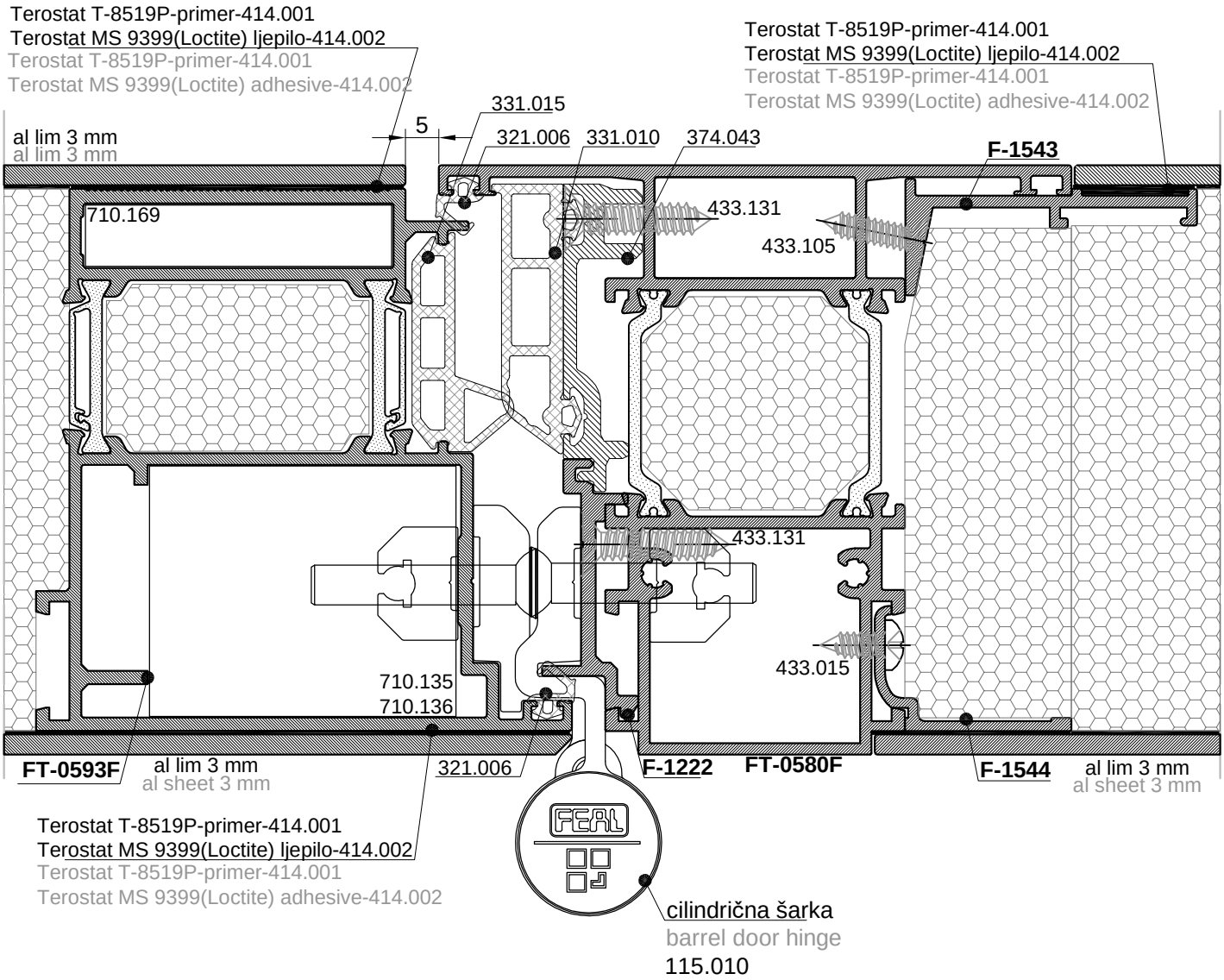

PRESJEK-8
CROSS PRESJEK-8

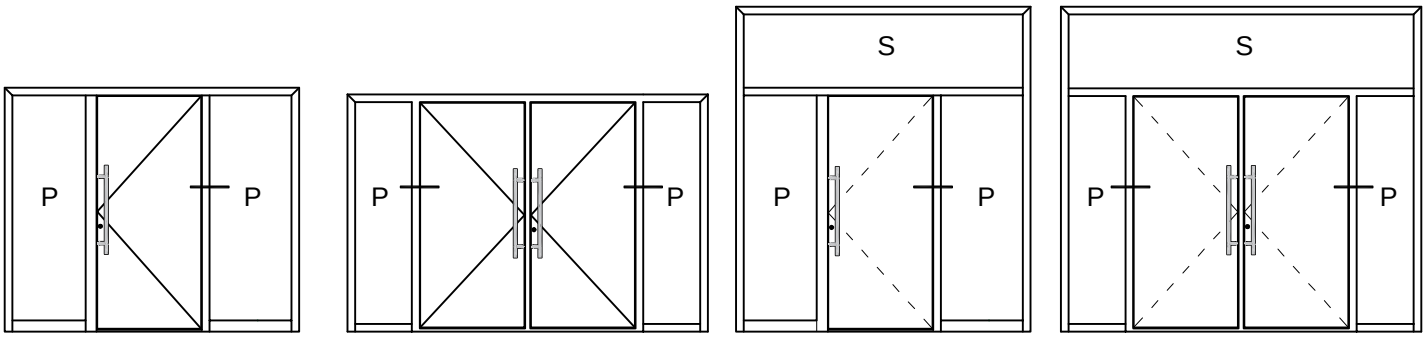

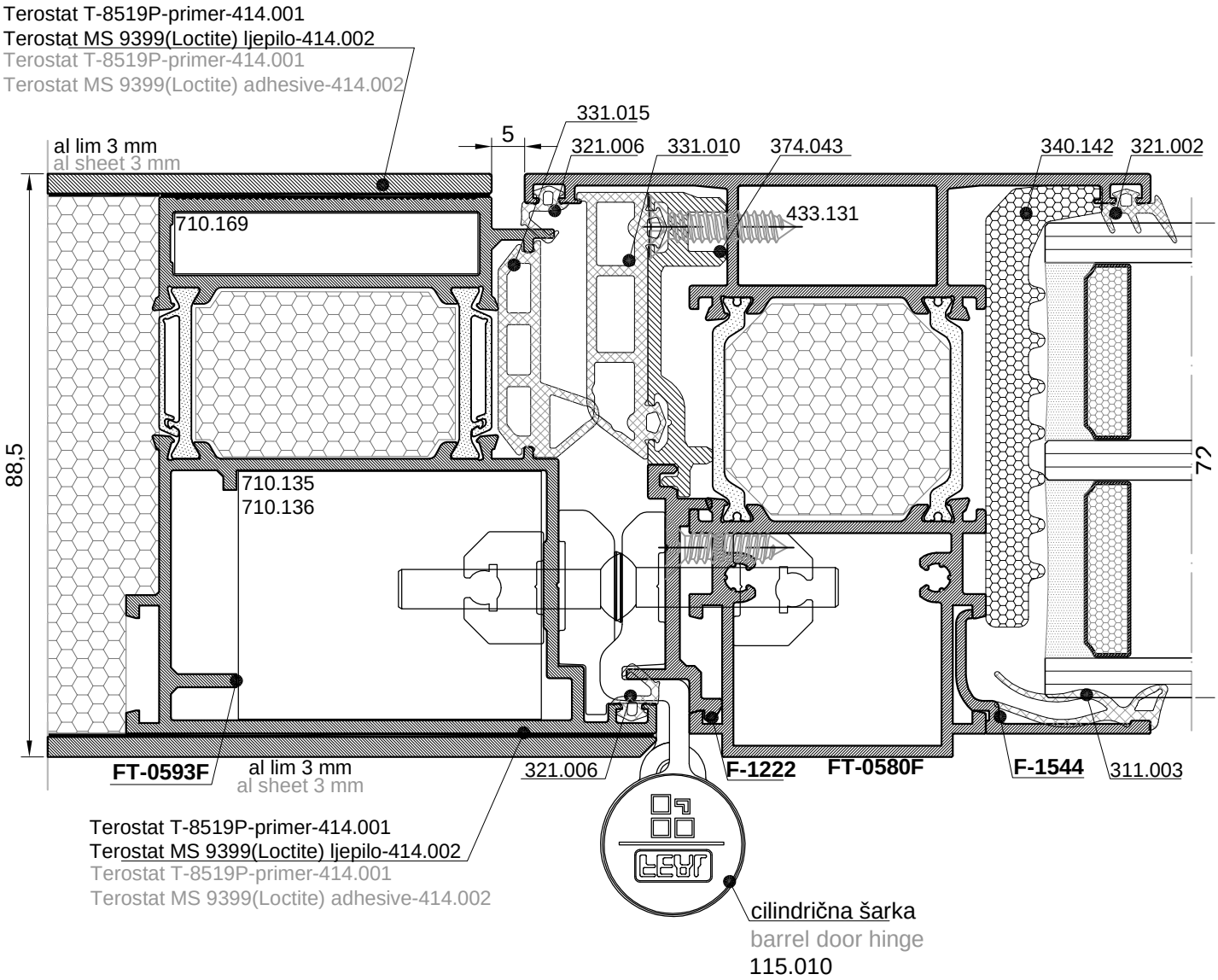

PRESJEK-8A
CROSS SECTION-8A

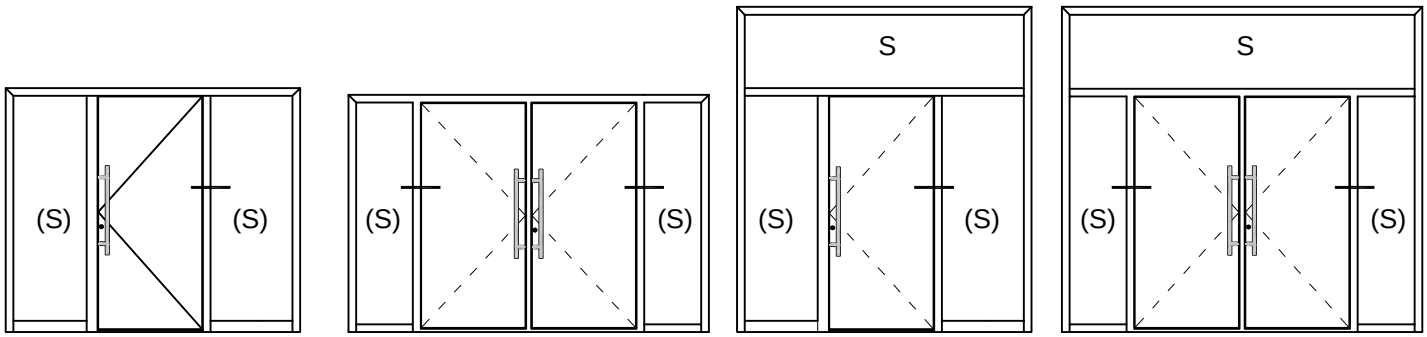

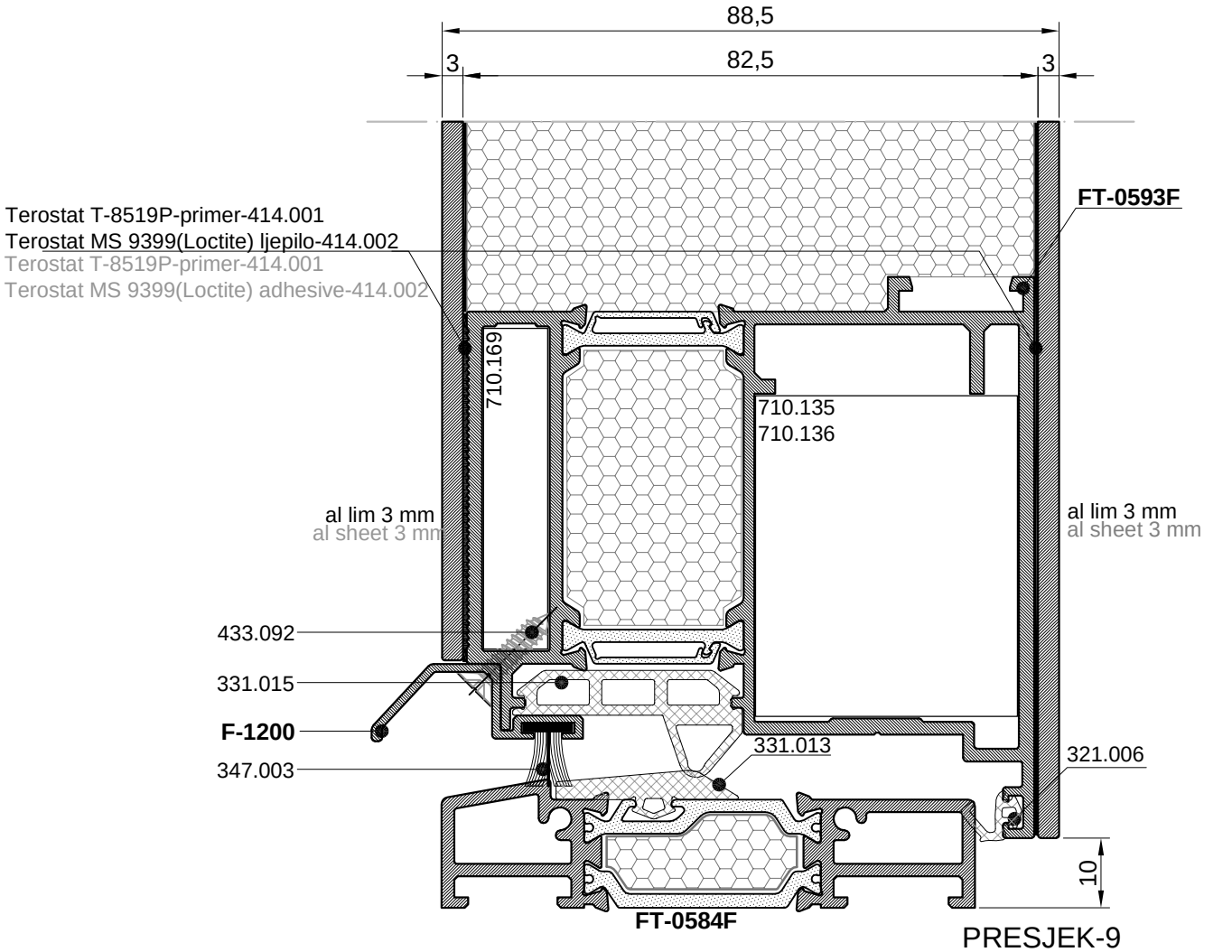

PRESJEK-9
CROSS SECTION-9

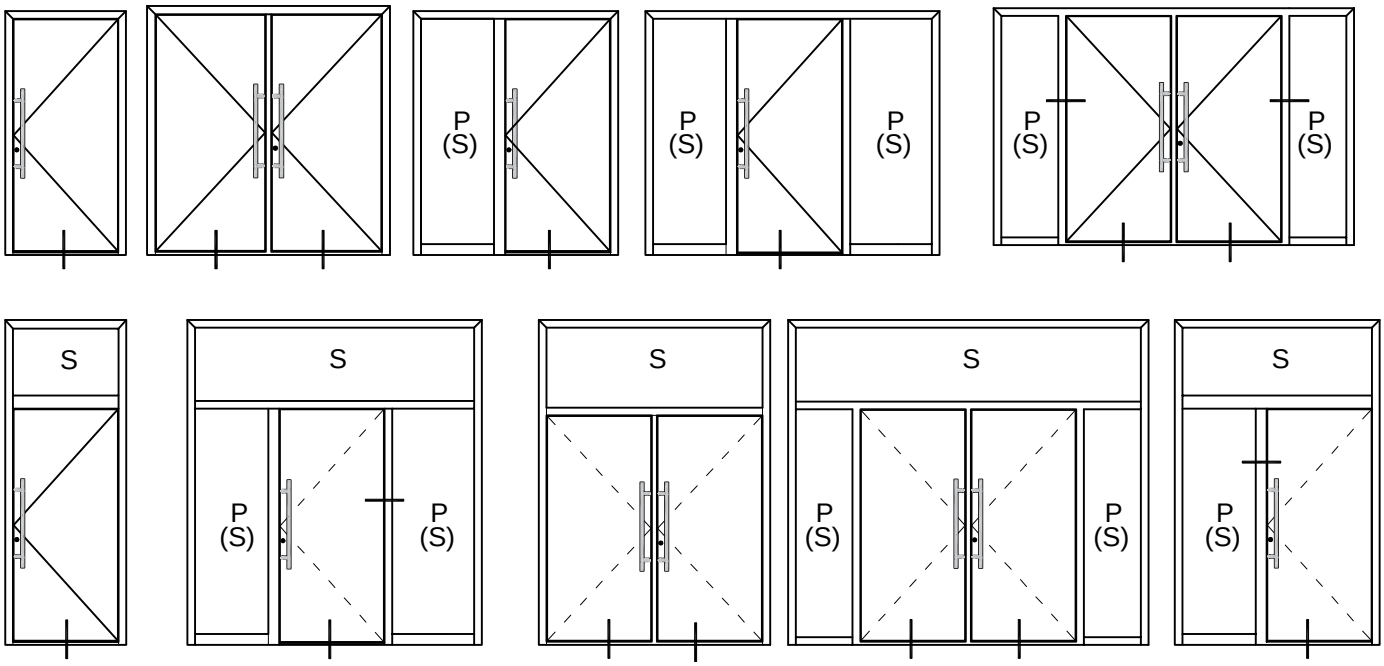

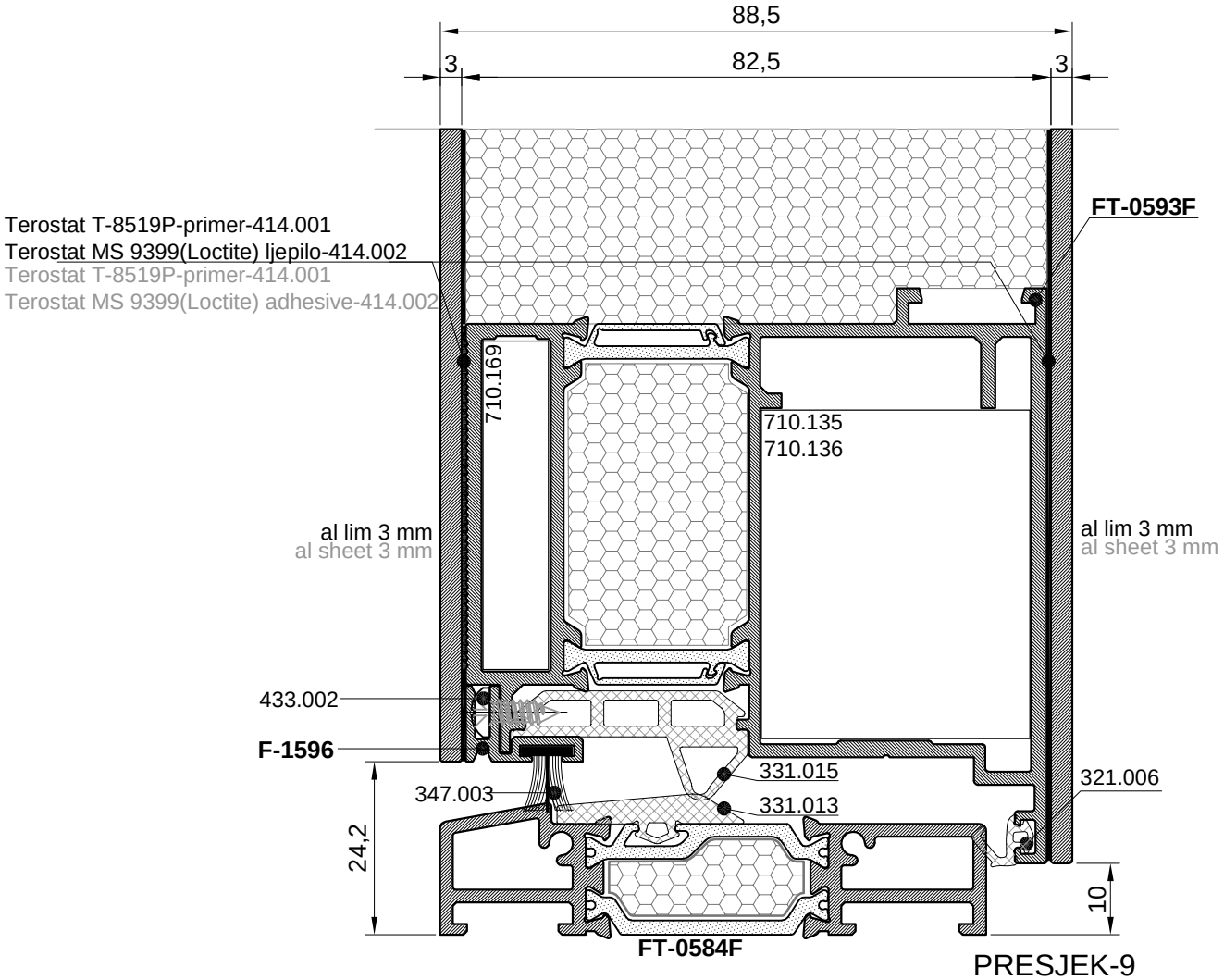

PRESJEK-9
CROSS SECTION-9

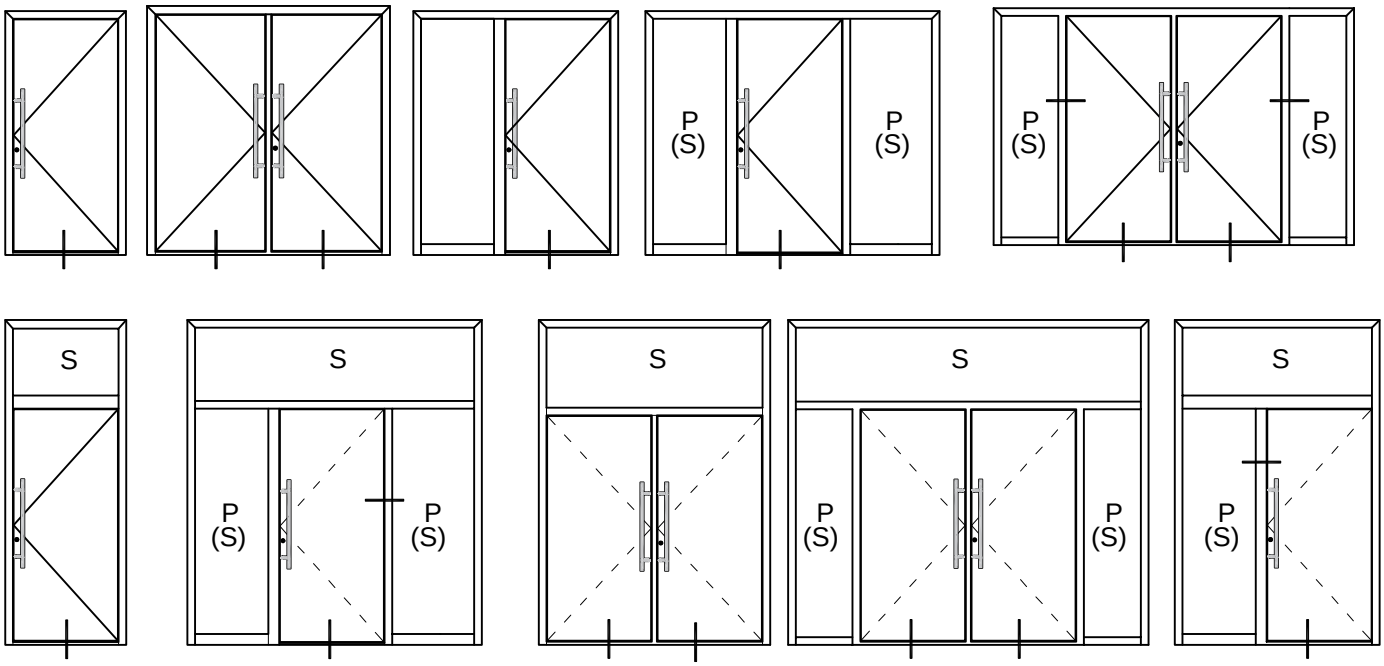

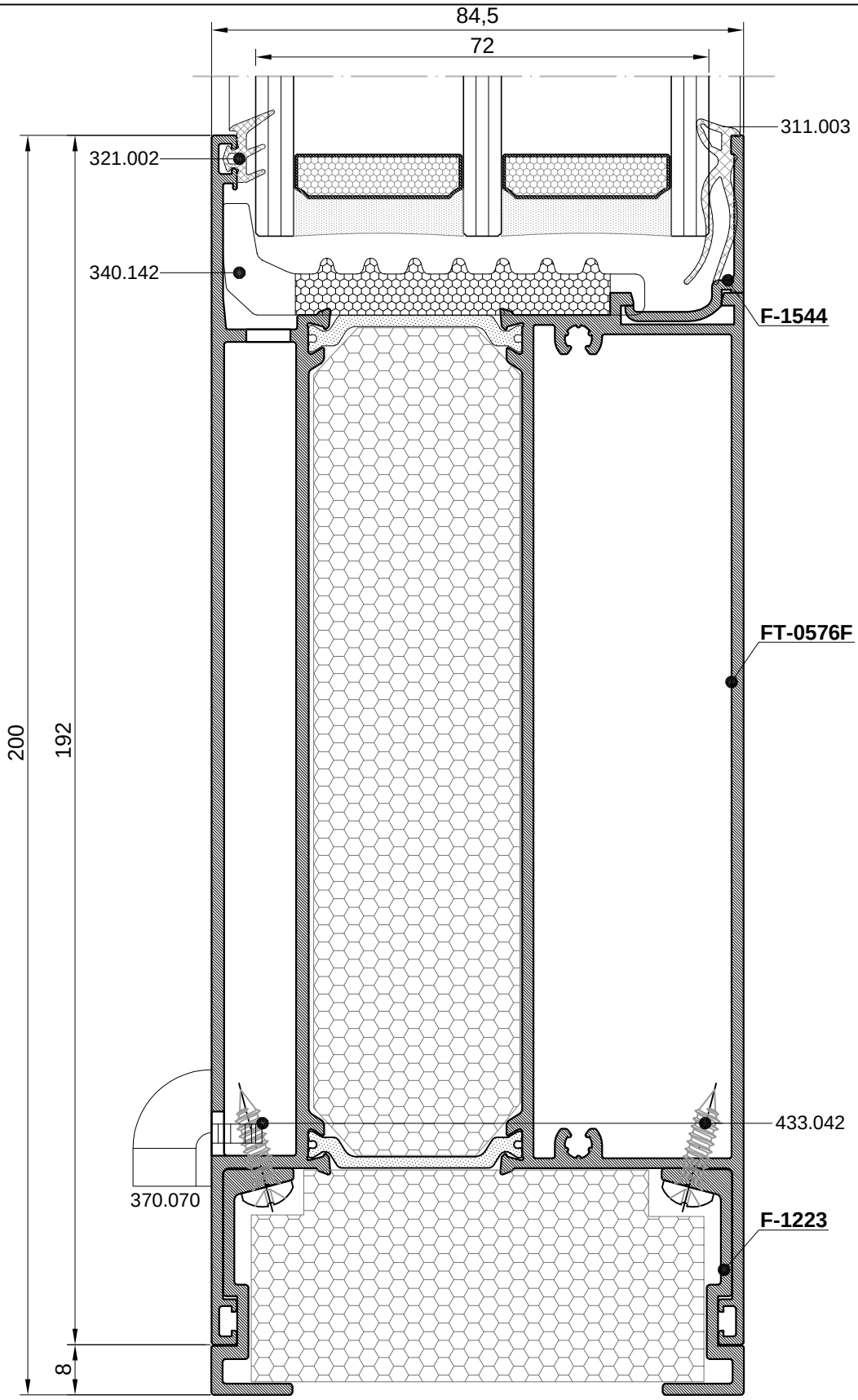

PRESJEK-10
CROSS SECTION-10

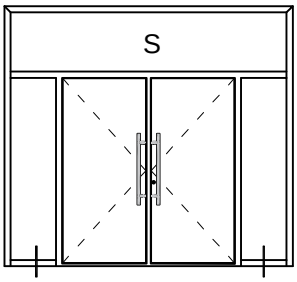

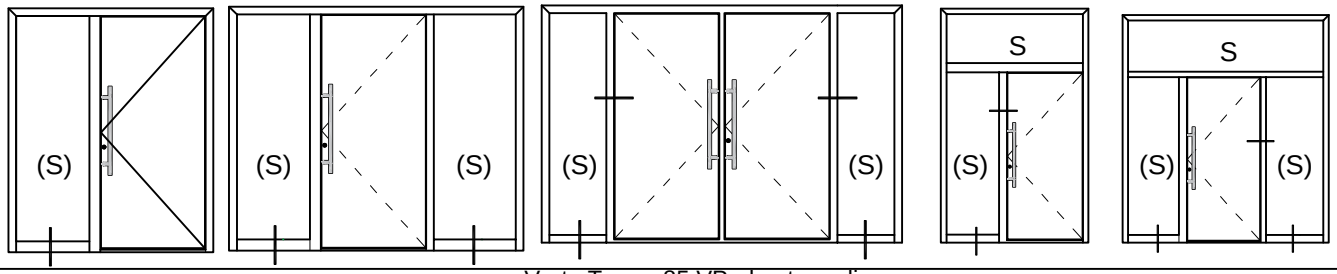

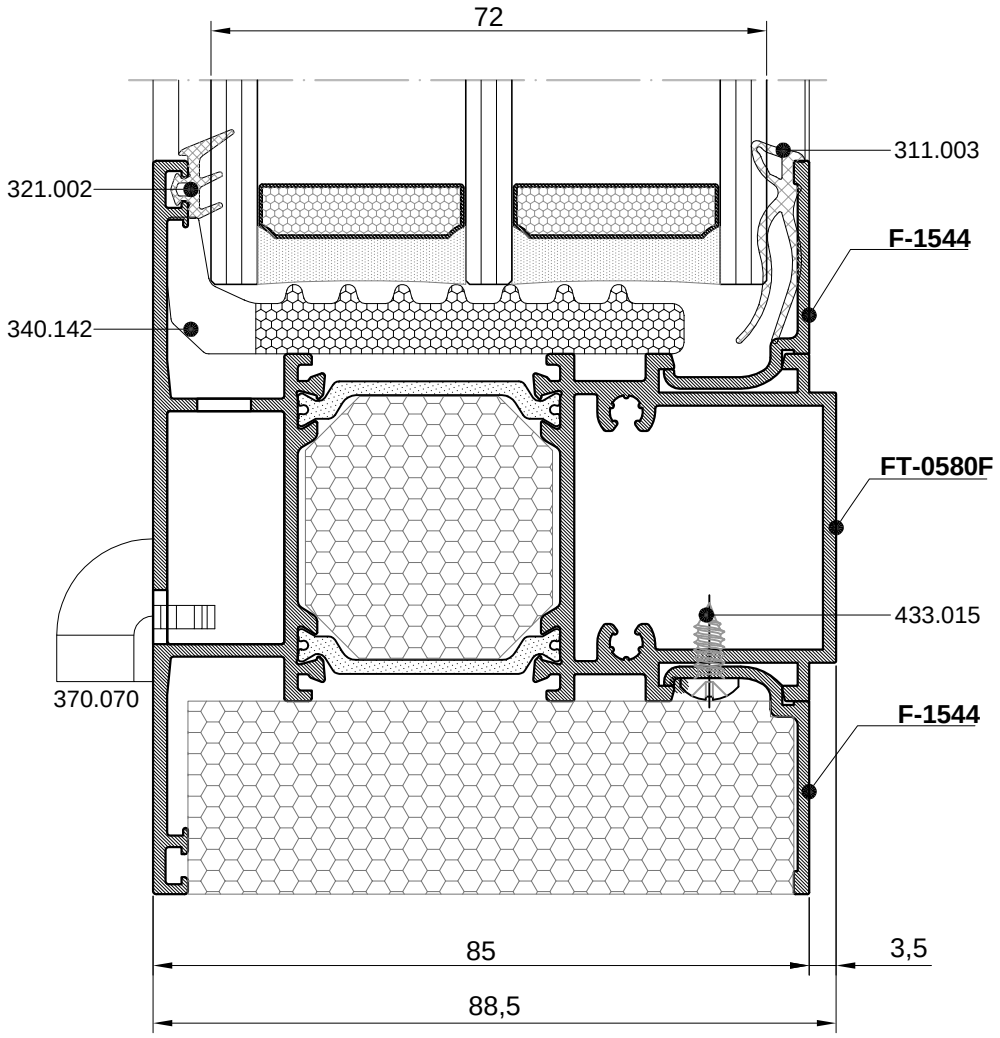

PRESJEK-10A
CROSS SECTION-10A

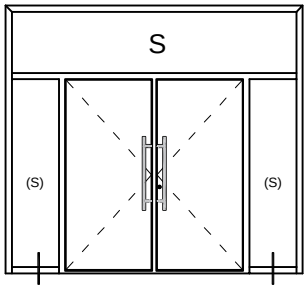

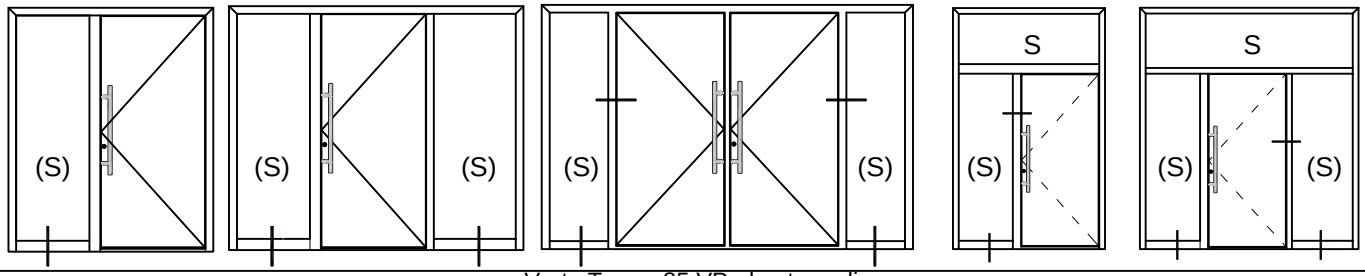

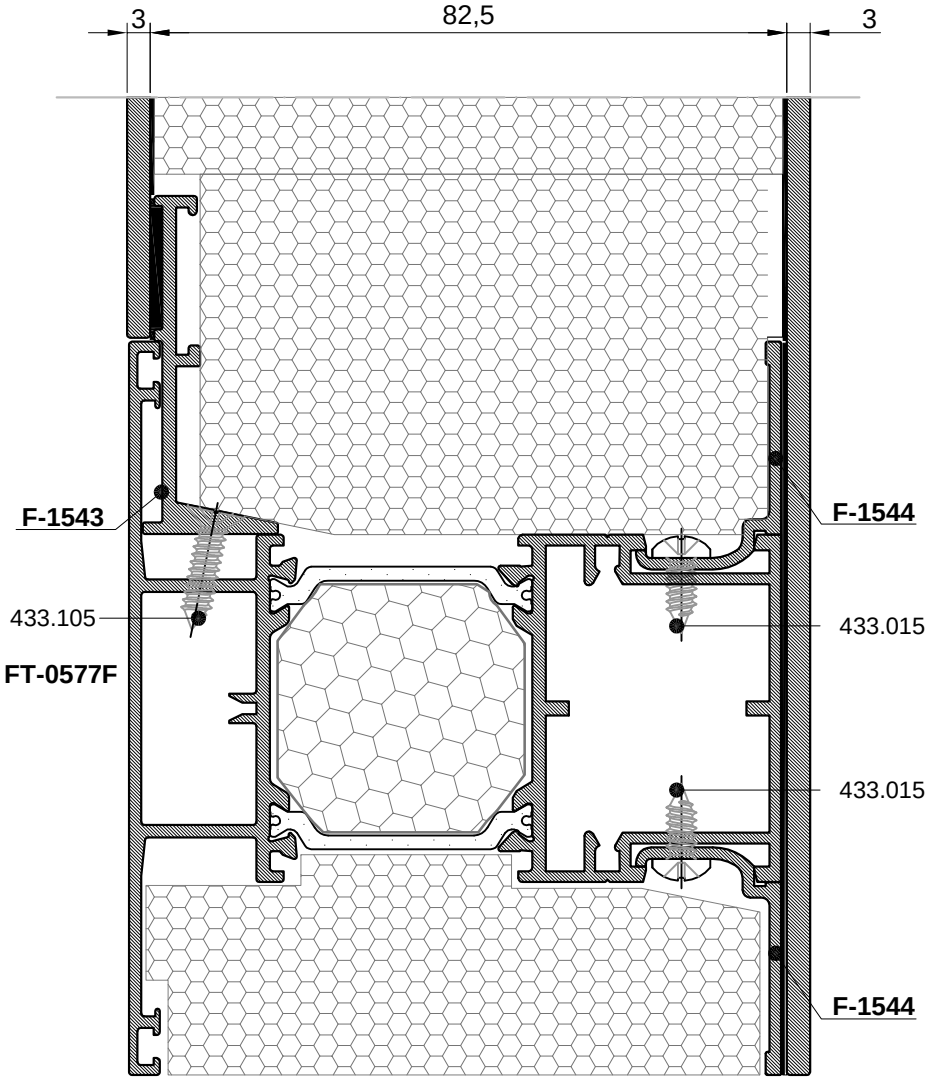
3
82,5
3
F-1543
F-1544
433.105
FT-0577F
433.015
433.015
F-1544

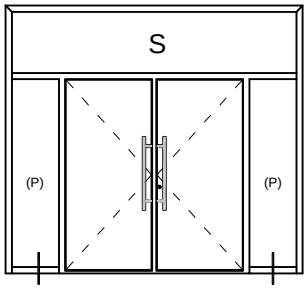
S
(P)
(P)

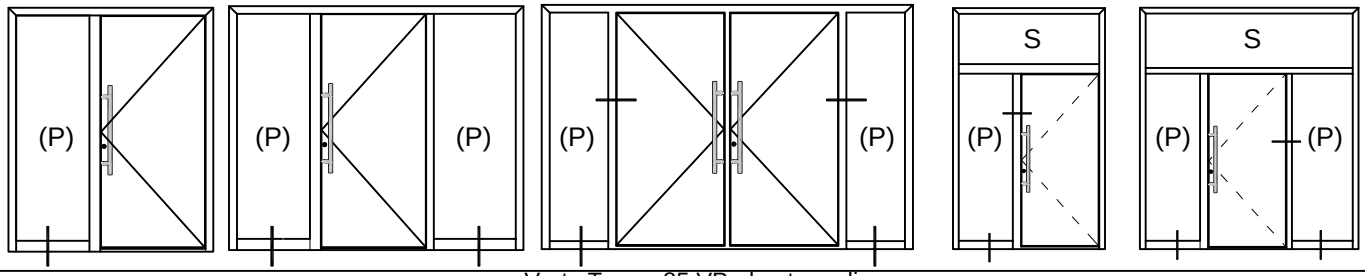
(P)
(P)
(P)
(P)
(P)
S
(P)
S
(P)
(P)

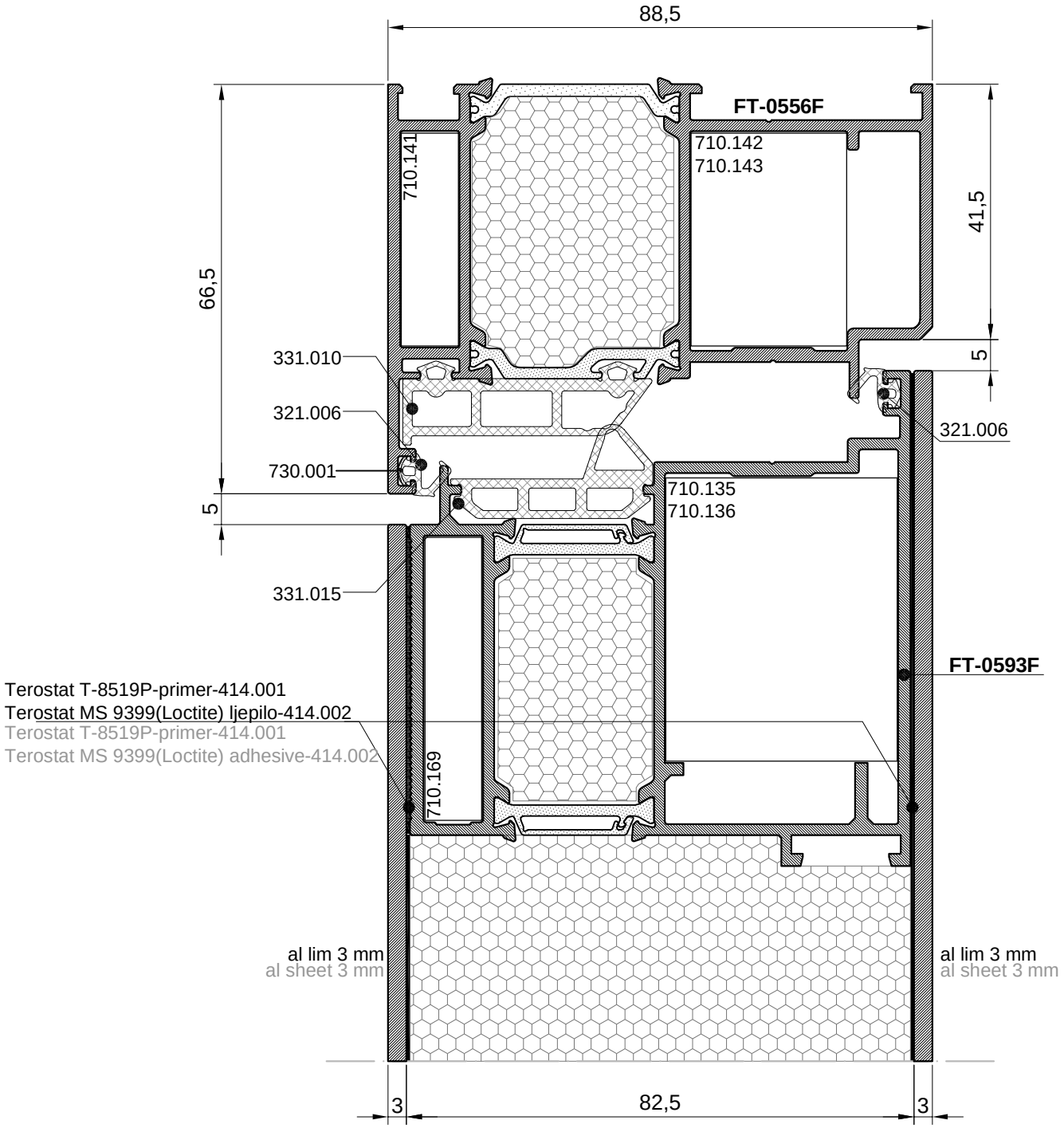

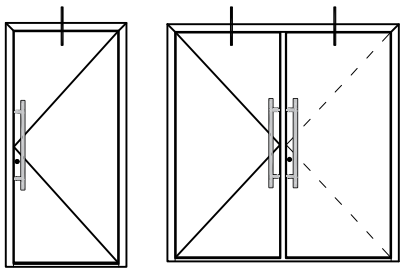

PRESJEK-11
CROSS SECTION-11

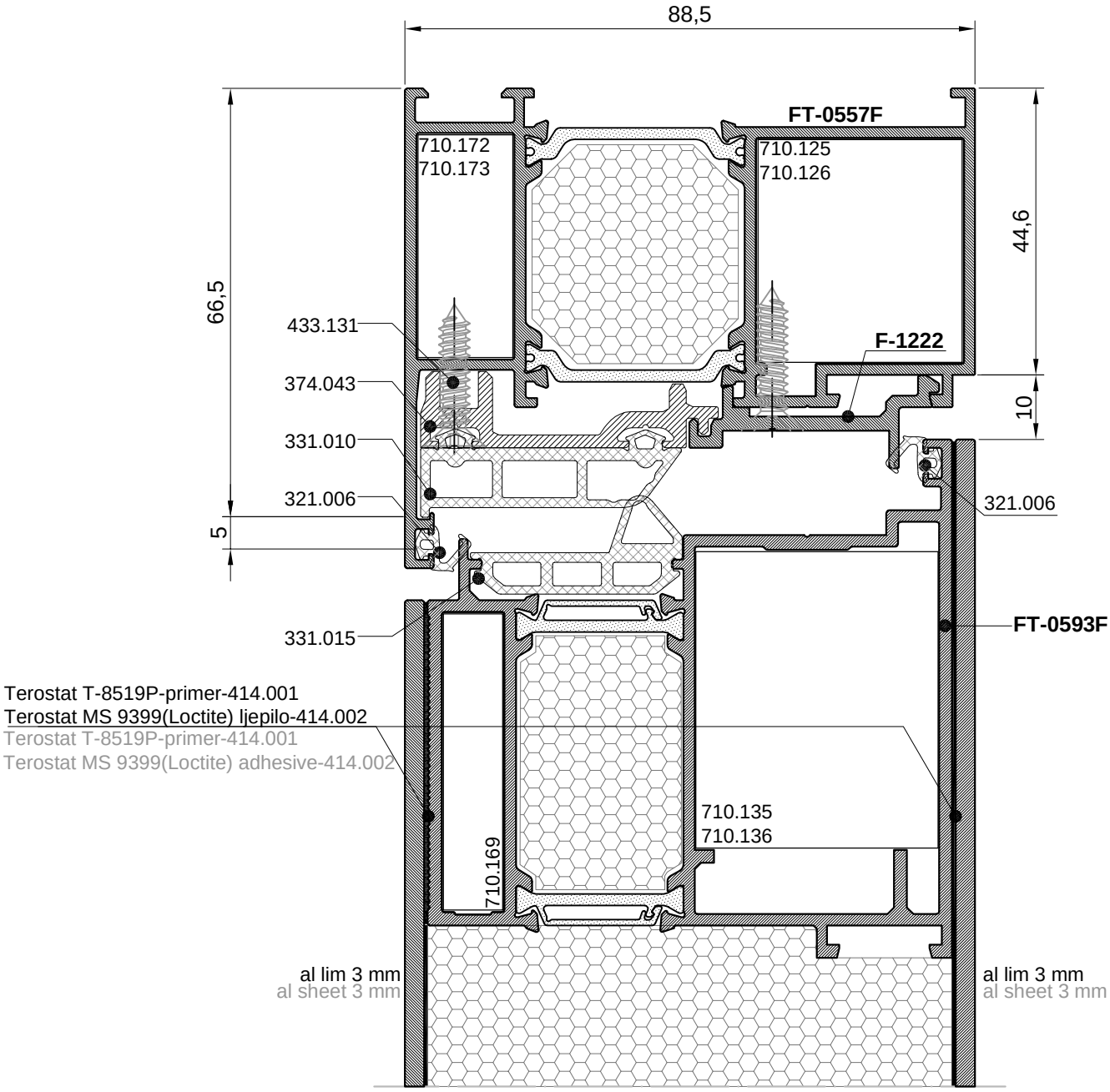

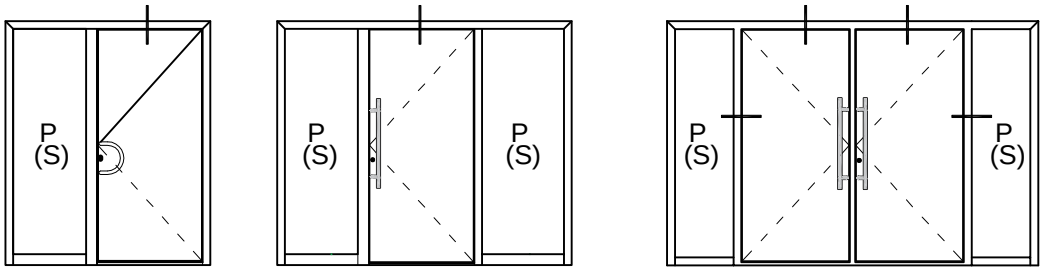

PRESJEK-12
CROSS SECTION-12

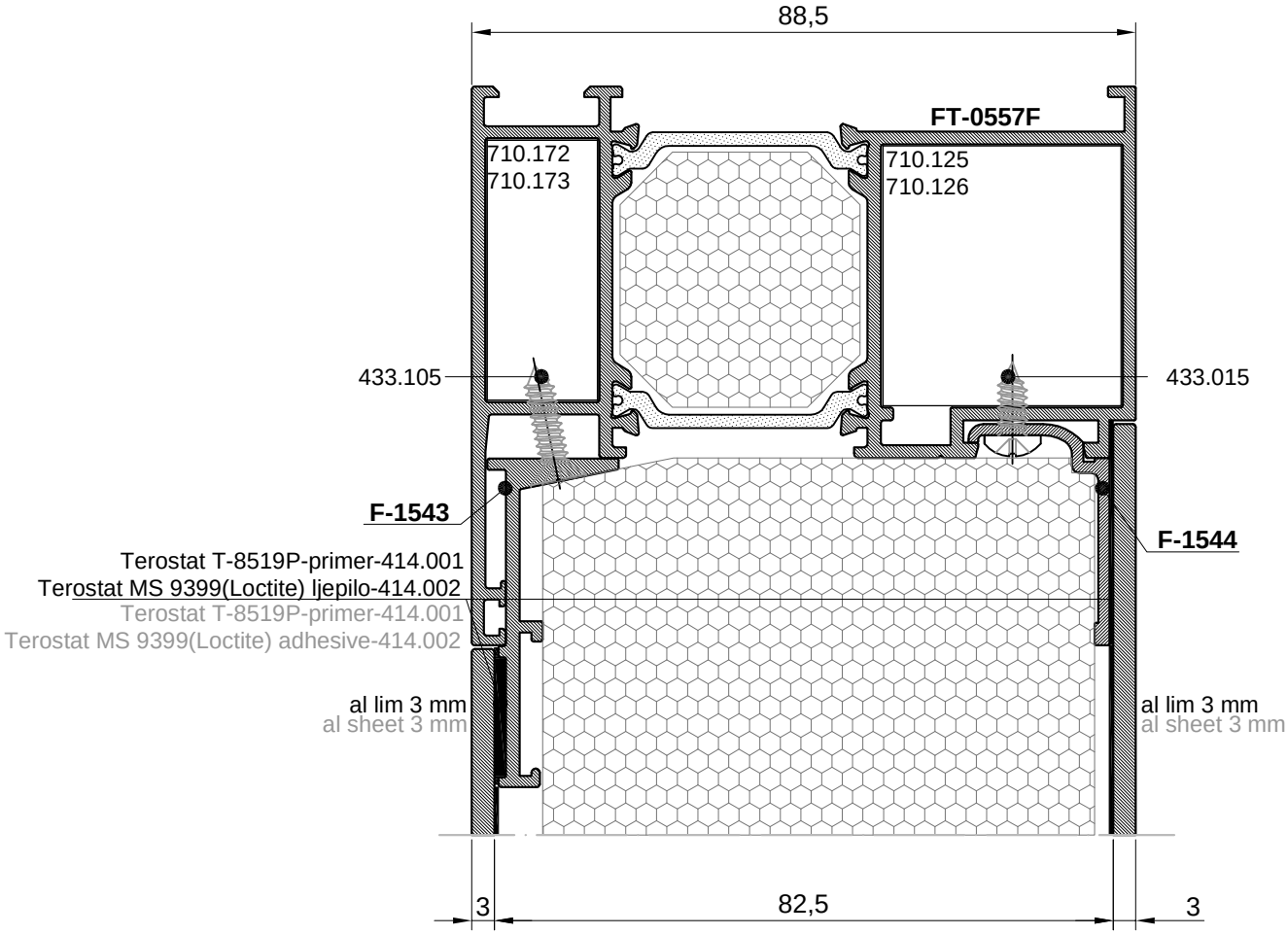

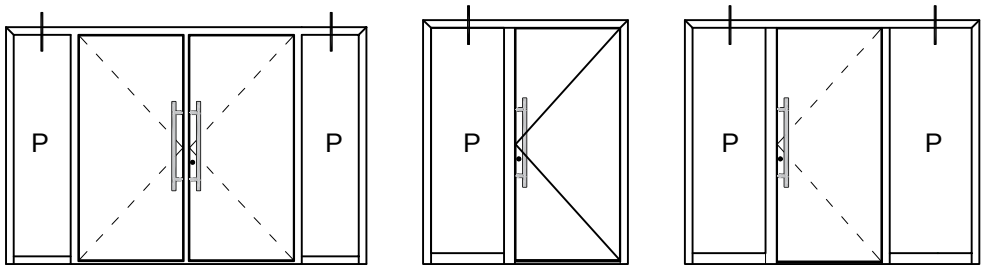

PRESJEK-13
CROSS SECTION-13

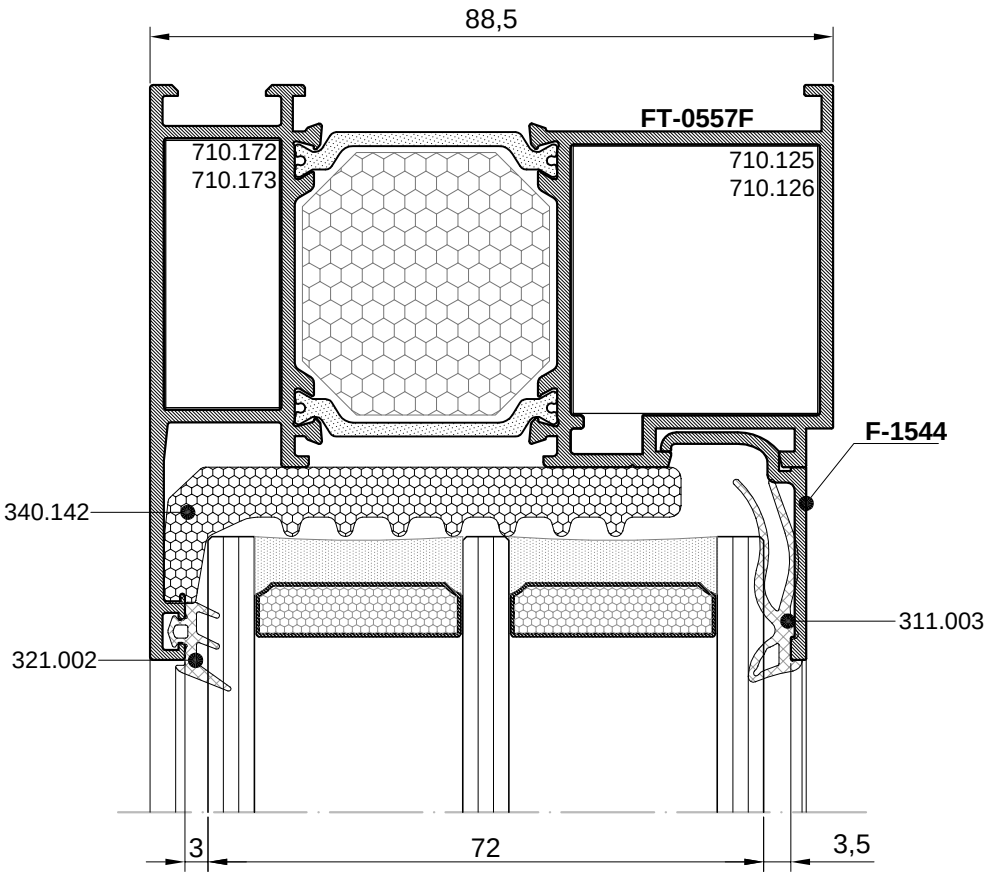

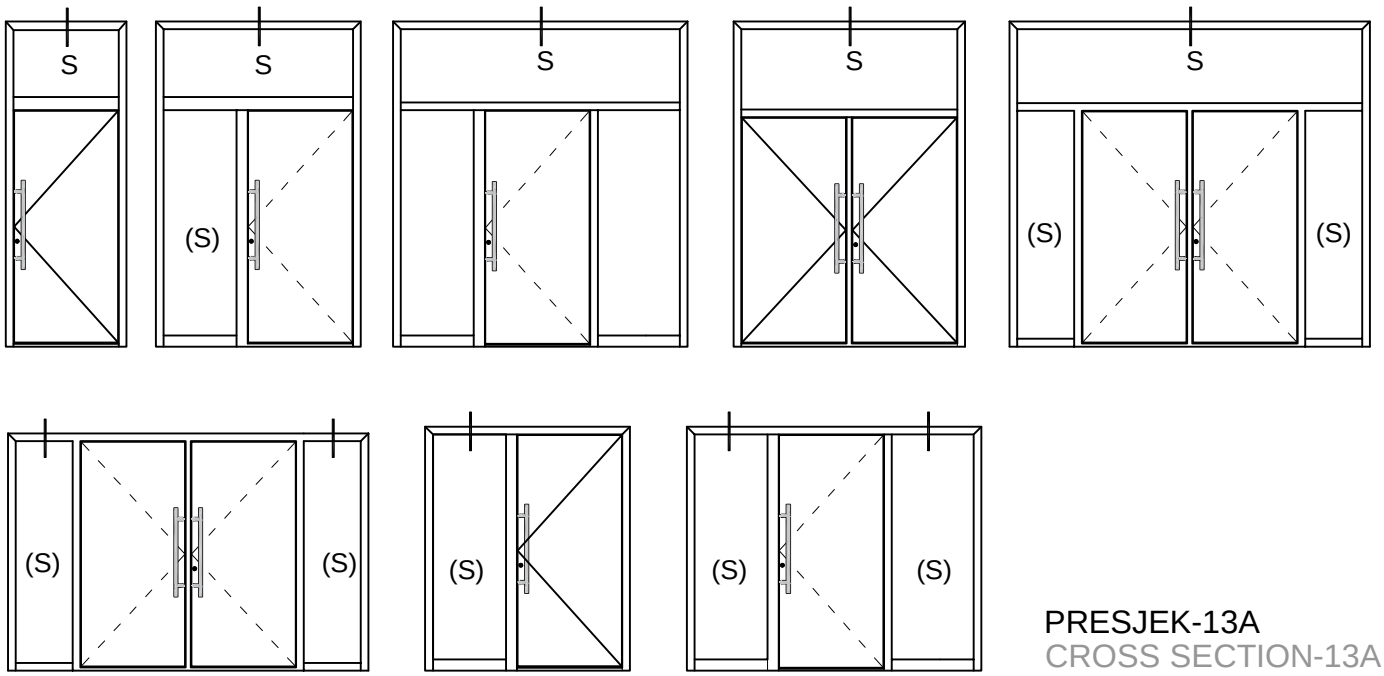

PRESJEK-13A
CROSS SECTION-13A

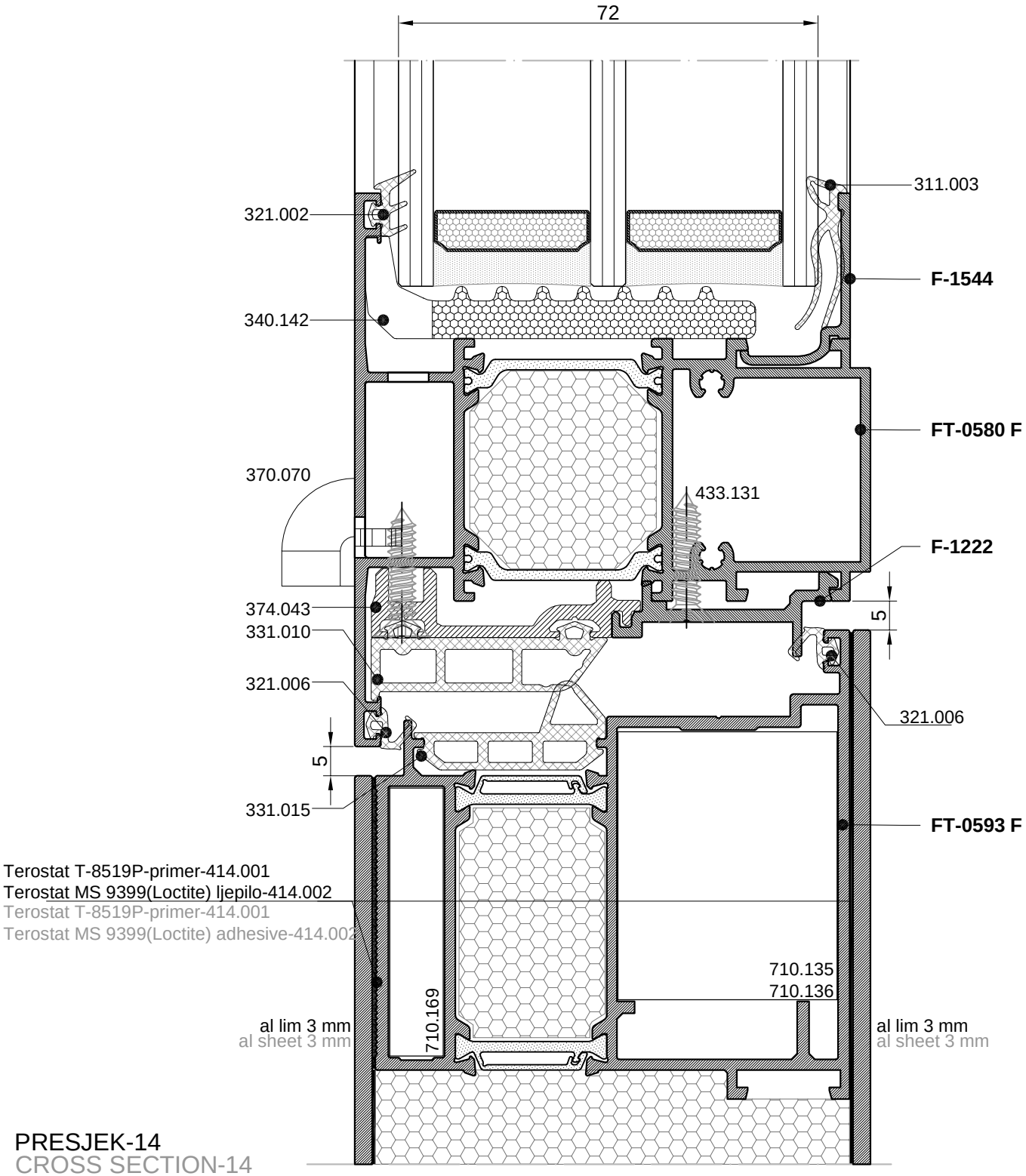

PRESJEK-14
CROSS SECTION-14

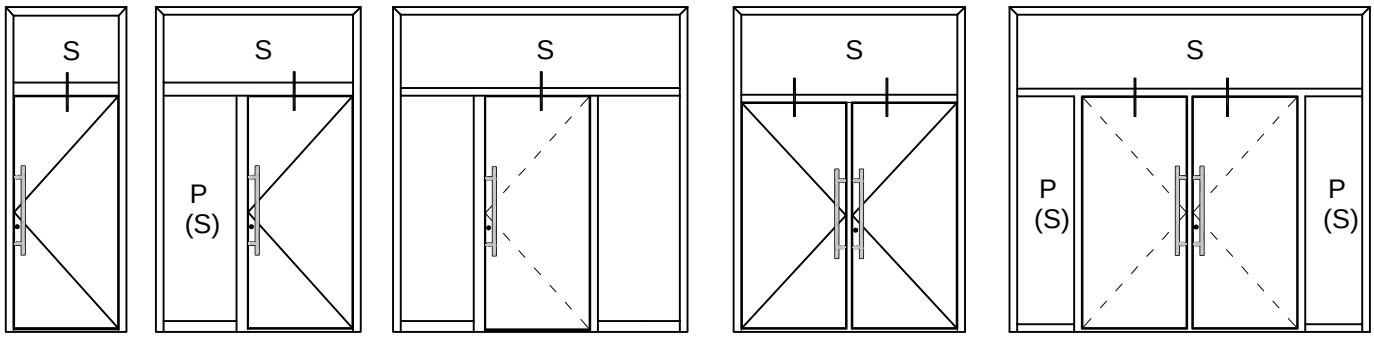

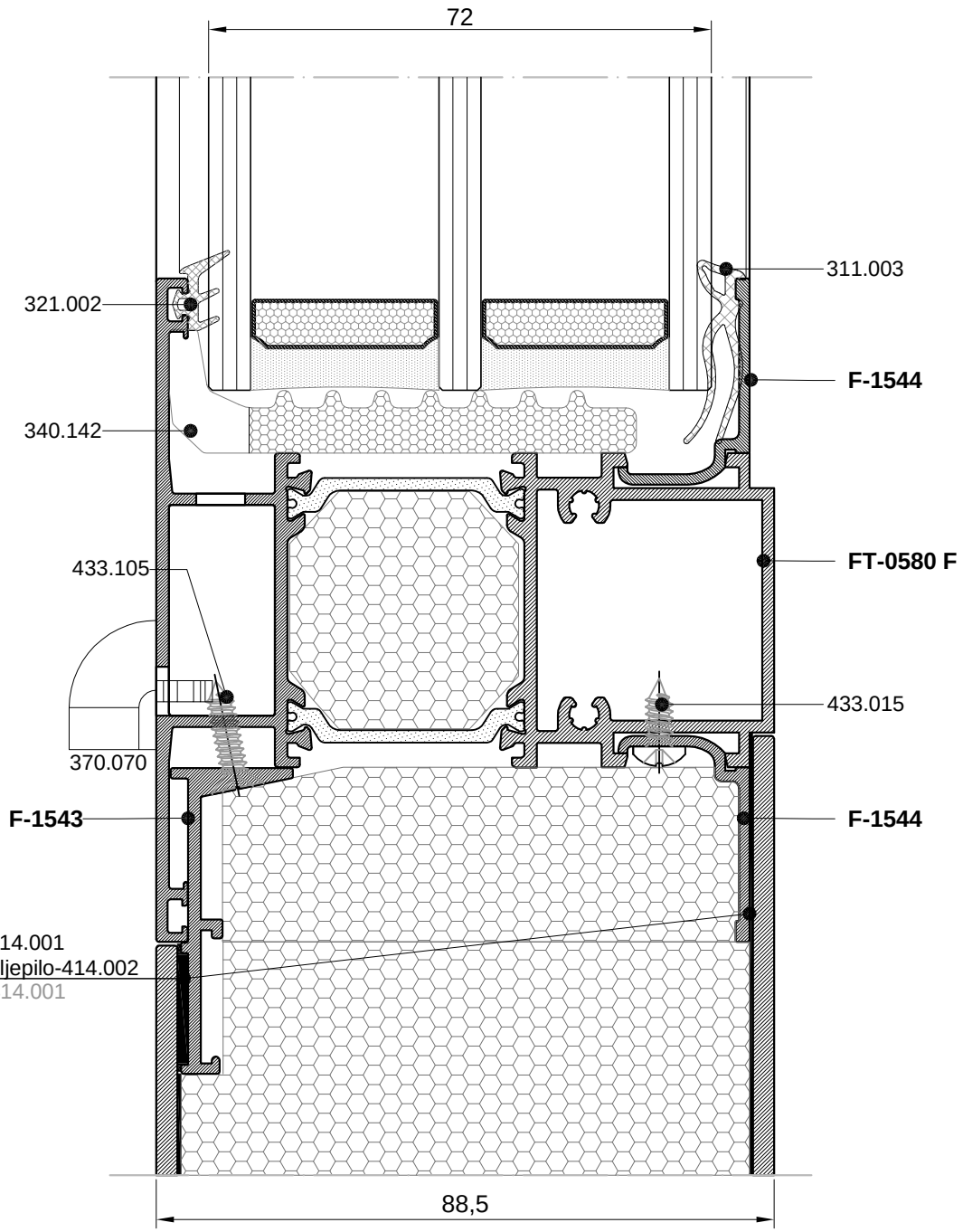

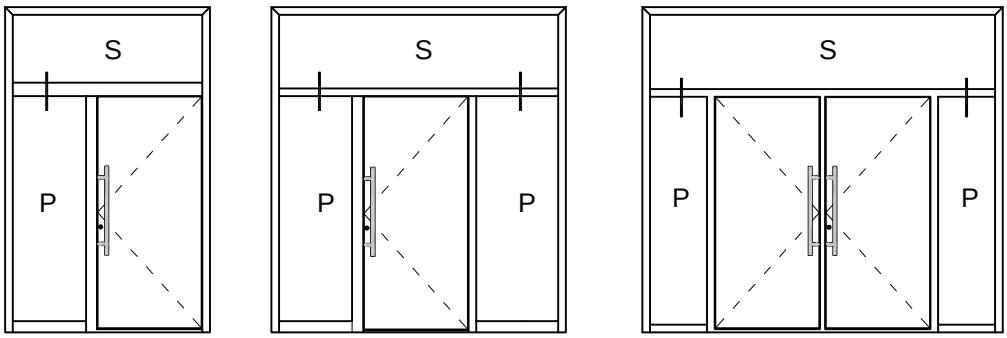

PRESJEK-15
CROSS SECTION-15

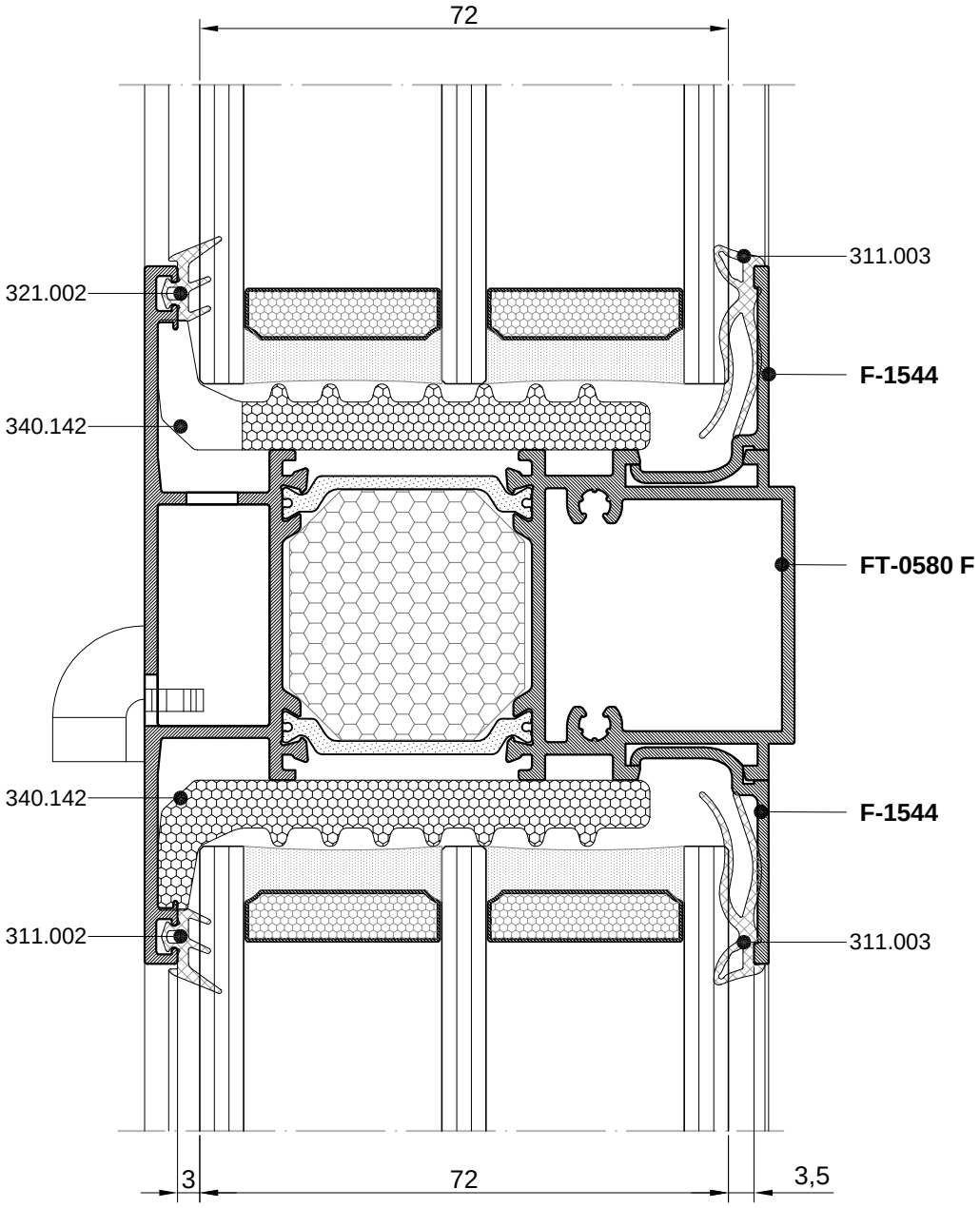

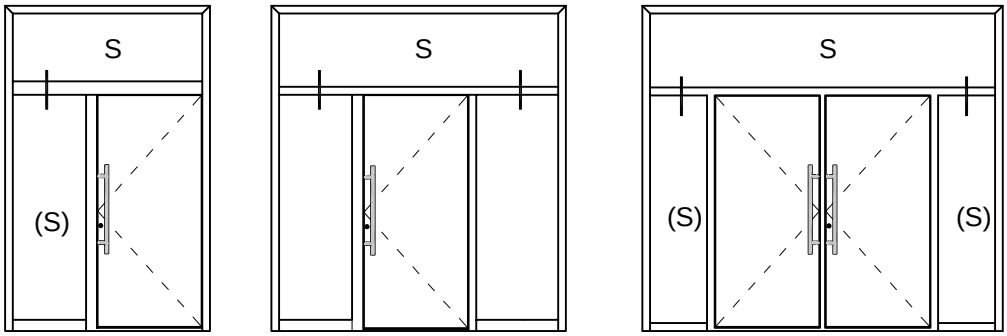

PRESJEK-15A
CROSS SECTION-15A

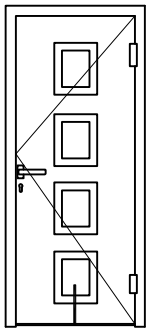

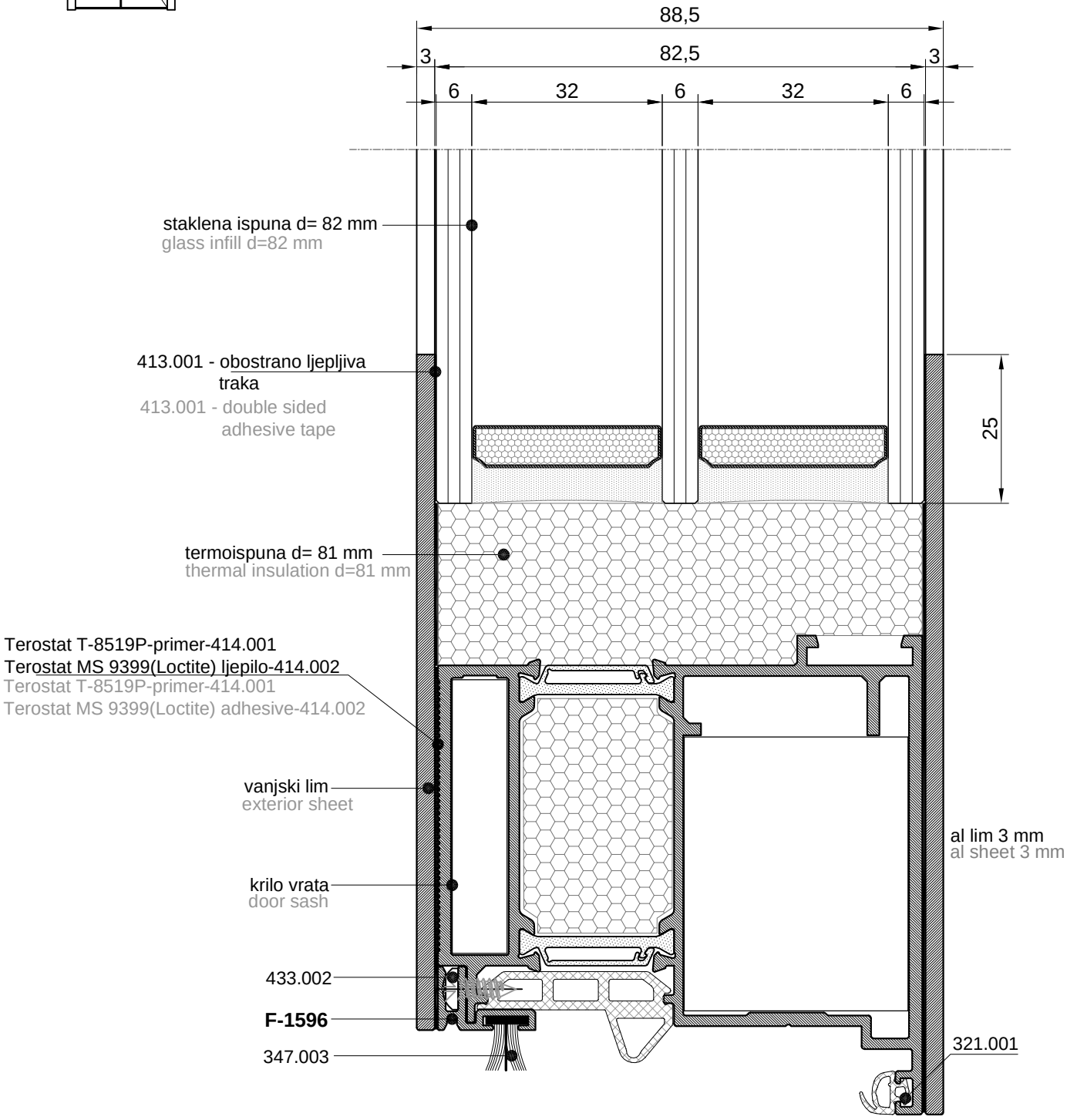
88,5
3
82,5
3
6
32
6
32
6
25
staklena ispuna d= 82 mm
glass infill d=82 mm
413.001 - obostrano ljepljiva traka
413.001 - double sided adhesive tape
termoispuna d= 81 mm
thermal insulation d=81 mm
Terostat T-8519P-primer-414.001
Terostat MS 9399(Loctite) ljepilo-414.002
Terostat T-8519P-primer-414.001
Terostat MS 9399(Loctite) adhesive-414.002
vanjski lim
exterior sheet
krilo vrata
door sash
433.002
F-1596
347.003
al lim 3 mm
al sheet 3 mm
321.001

-vrata Termo 85 VP otvaranje unutra-
-staklena ispuna-

-door Termo 85 VP inward opening-
-glass infill-

PRESJEK-1
CROSS SECTION-1

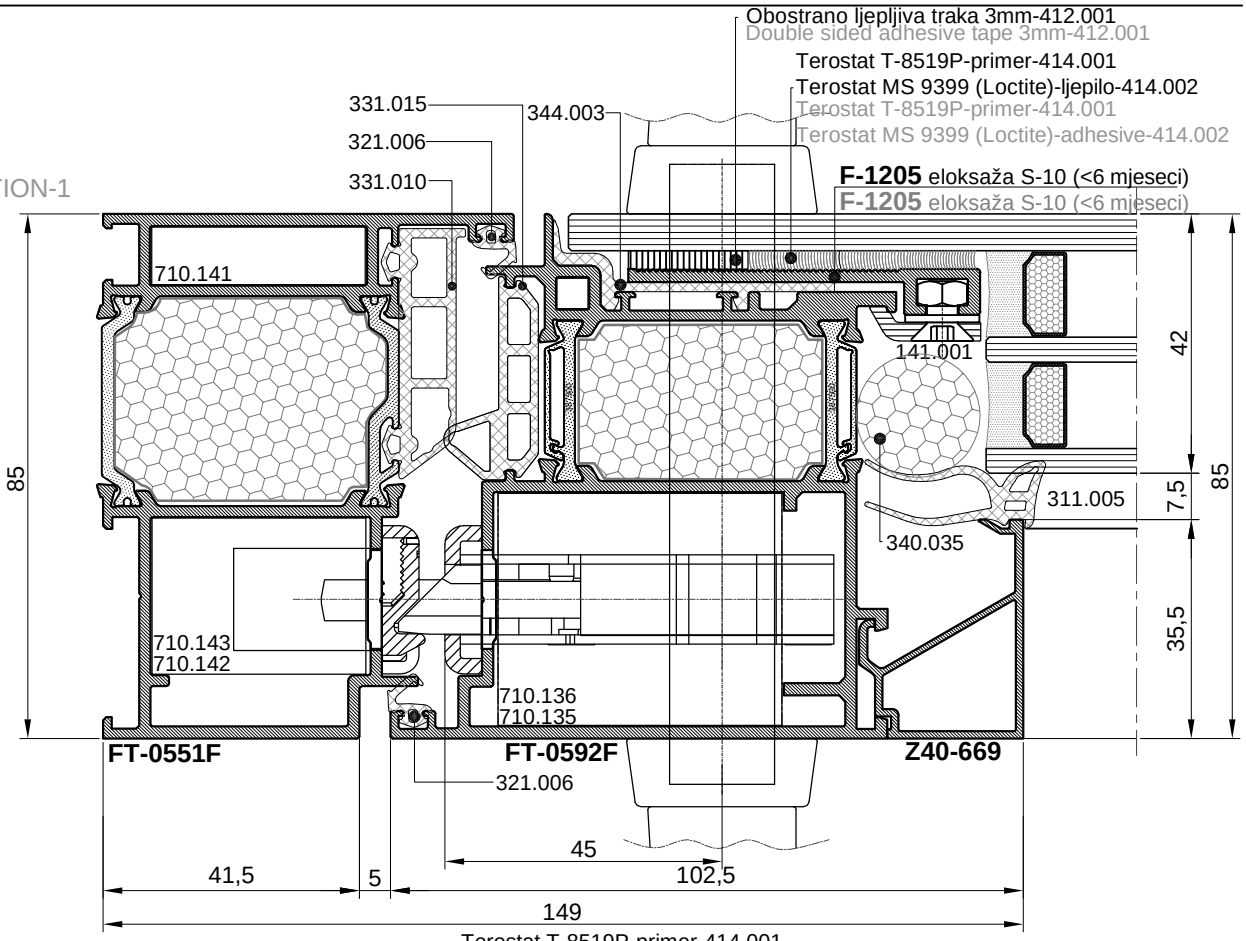

PRESJEK-2
CROSS SECTION-2

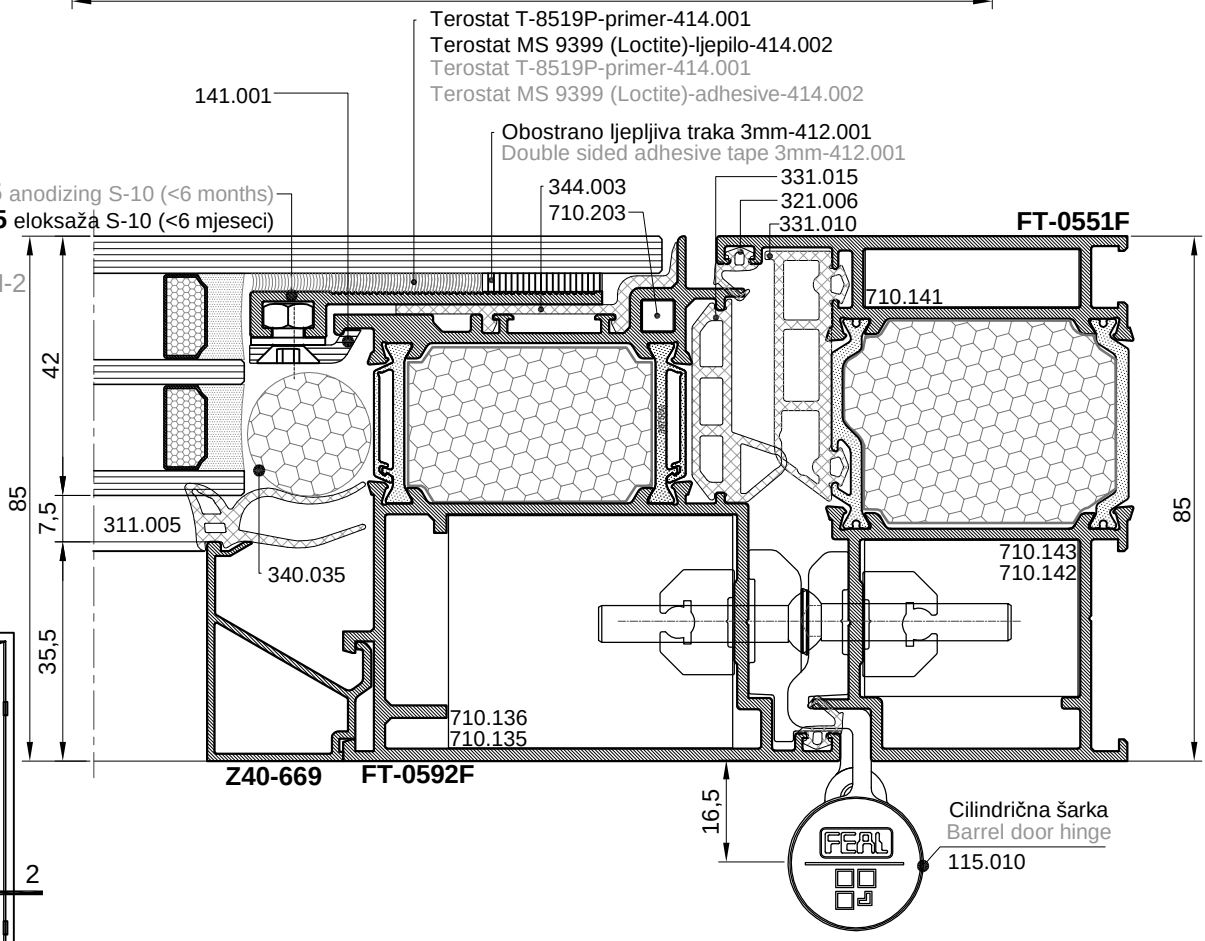

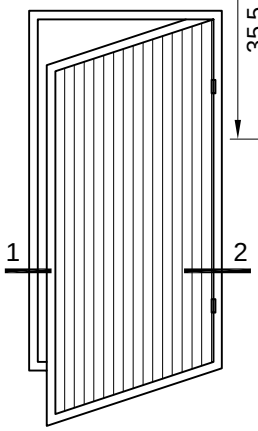

PRESJEK-6
CROSS SECTION-6

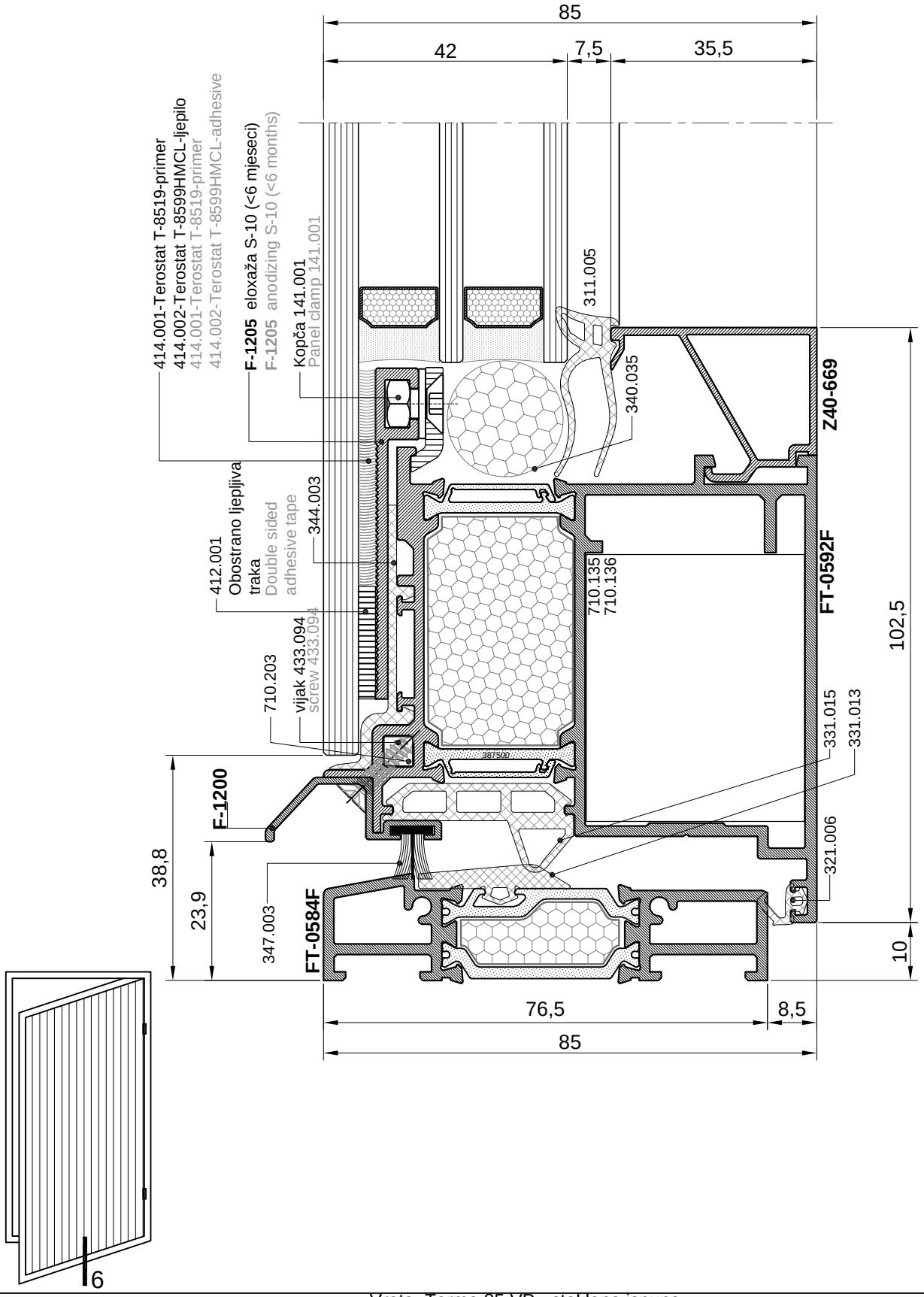

PRESJEK-3
CROSS SECTION-3

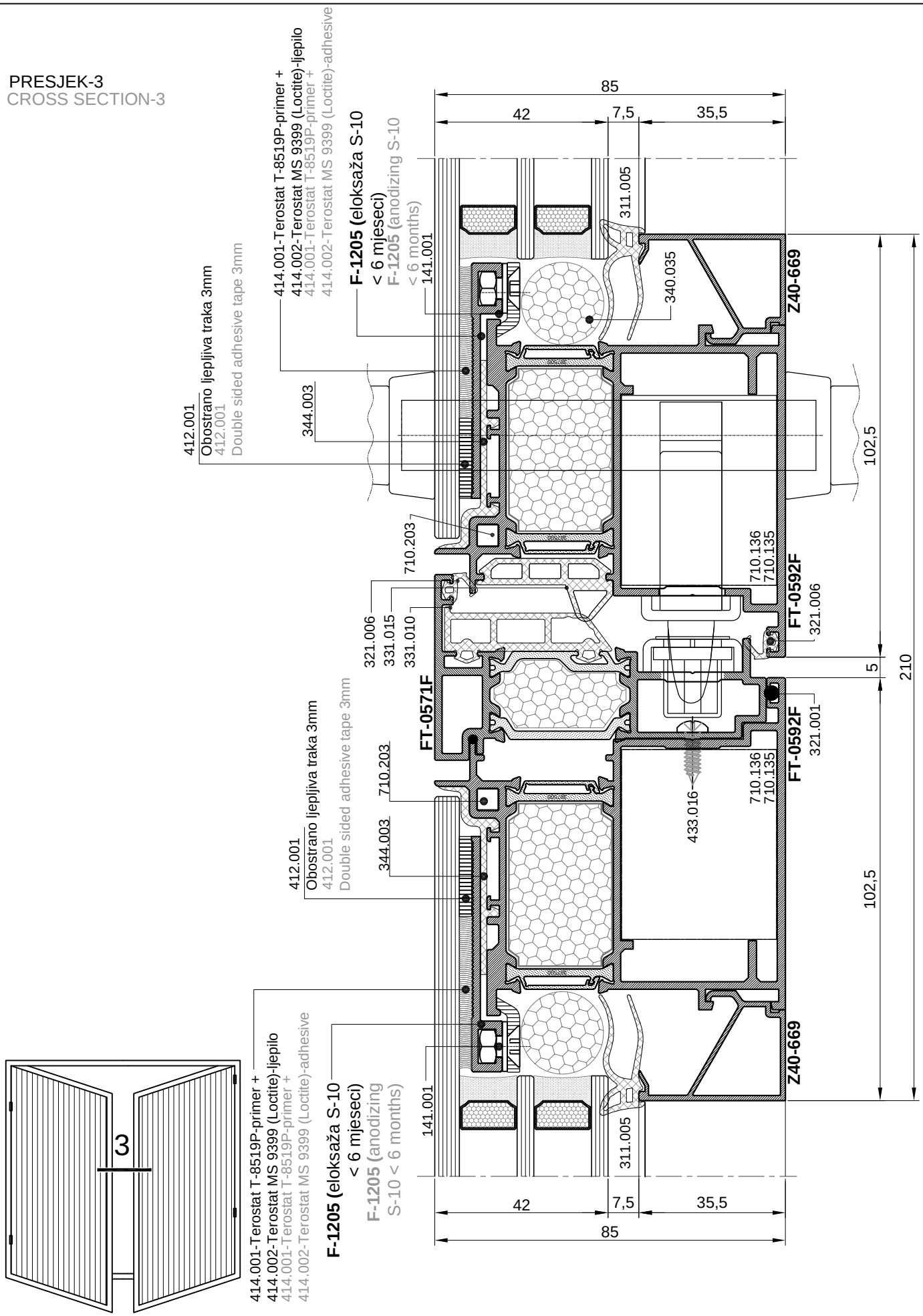

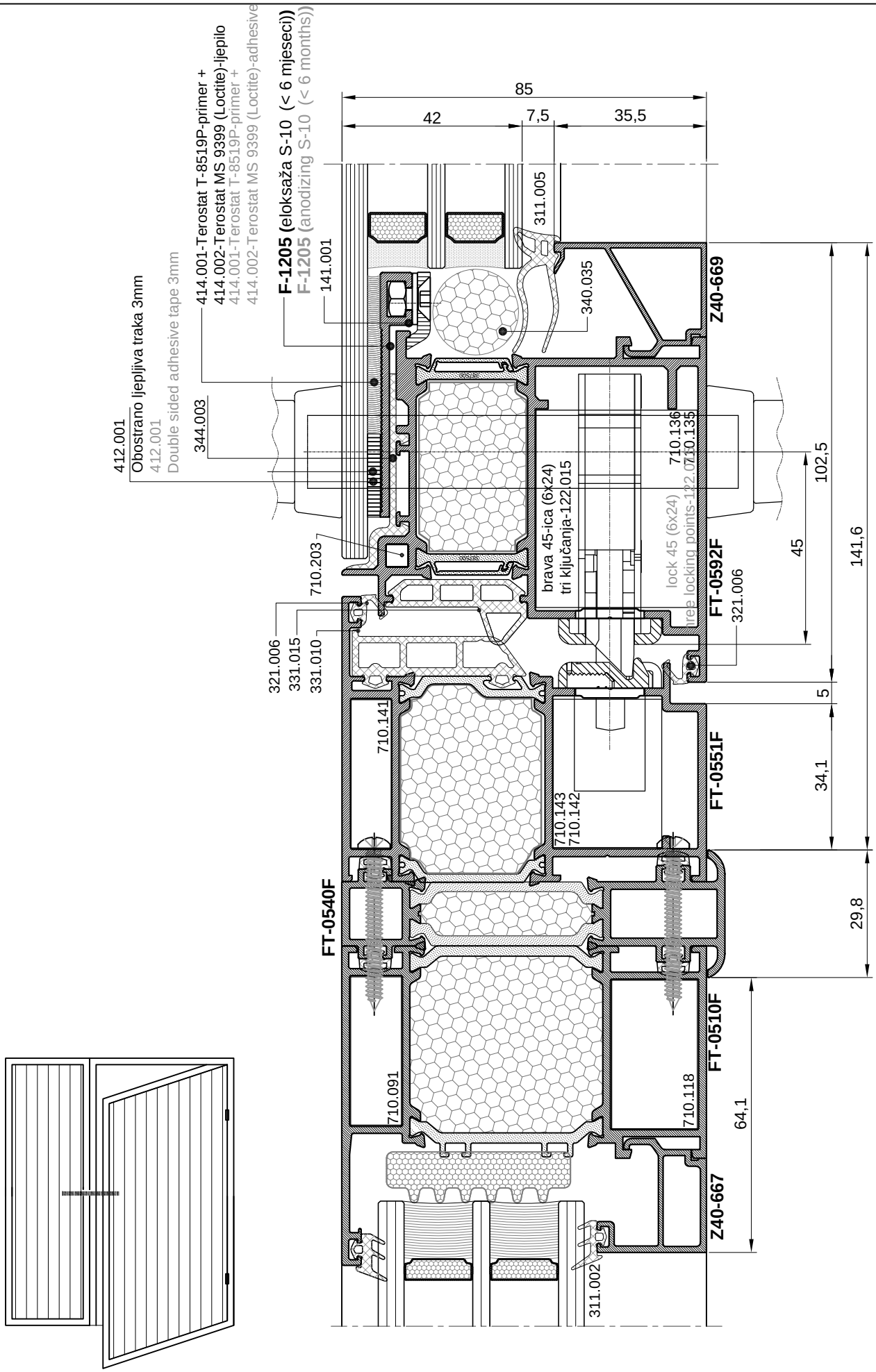
412.001
Obostrano ljepljiva traka 3mm
412.001
Double sided adhesive tape 3mm
344.003
414.001-Terostat T-8519P-primer +
414.002-Terostat MS 9399 (Loctite)-ljepilo
414.001-Terostat T-8519P-primer +
414.002-Terostat MS 9399 (Loctite)-adhesive
F-1205 (eloksaža S-10 (< 6 mjeseci))
F-1205 (anodizing S-10 (< 6 months))
141.001
85
42
7,5
35,5
311.005
340.035
Z40-669
710.136
710.135
brava 45-ica (6x24)
tri ključanja-122.015
lock 45 (6x24)
three locking points-122.015
102,5
45
141,6
FT-0592F
321.006
710.203
321.006
331.015
331.010
5
710.141
FT-0551F
34,1
710.143
710.142
FT-0540F
29,8
FT-0510F
710.091
710.118
64,1
Z40-667
311.002

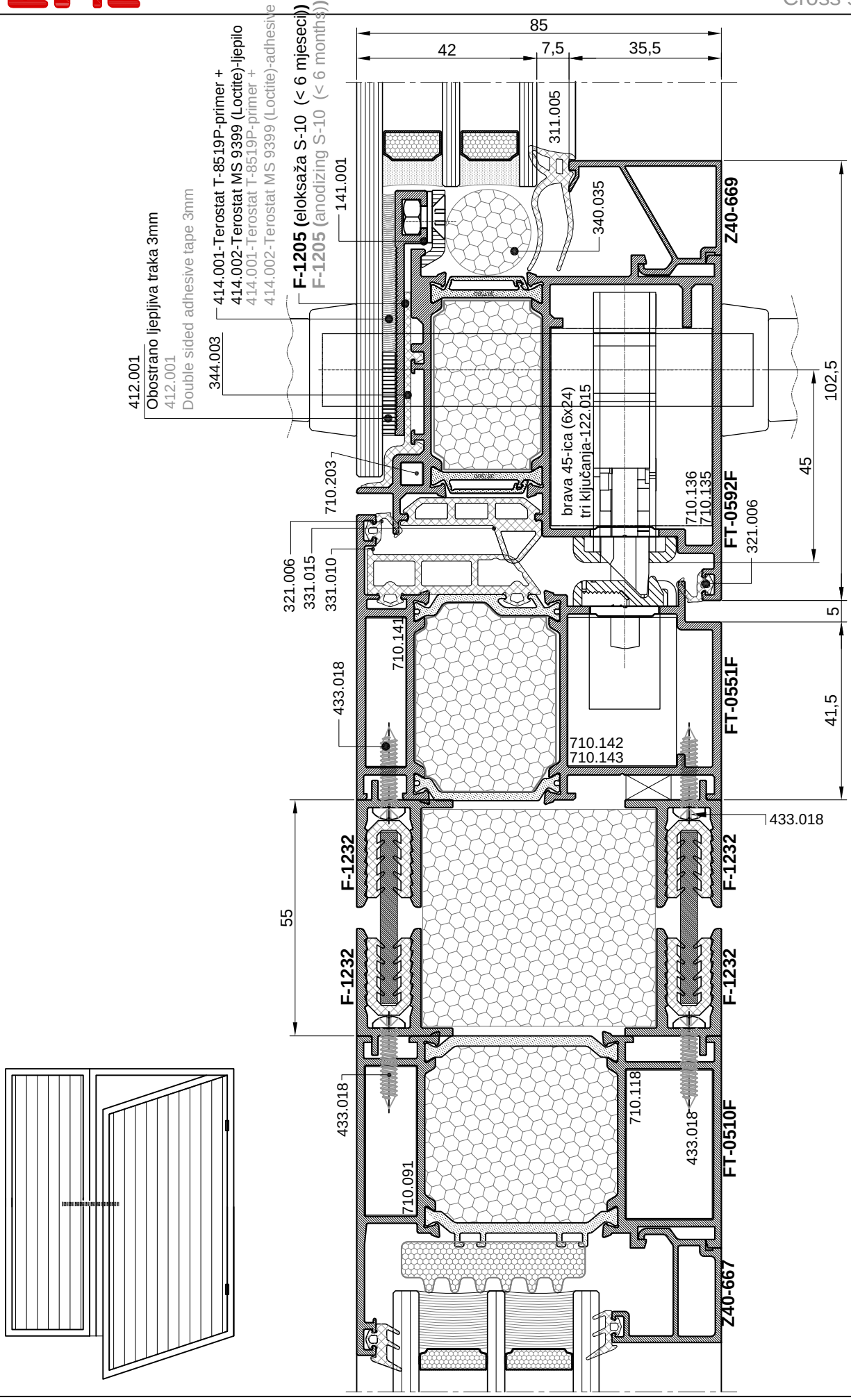
85
42
7,5
35,5
311.005
340.035
141.001
F-1205 (eloksaža S-10 (< 6 mjeseci))
F-1205 (anodizing S-10 (< 6 months))
414.001-Terostat T-8519P-primer +
414.002-Terostat MS 9399 (Loctite)-ljepilo
414.001-Terostat T-8519P-primer +
414.002-Terostat MS 9399 (Loctite)-adhesive
344.003
412.001
Obostrano ljepljiva traka 3mm
412.001
Double sided adhesive tape 3mm
Z40-669
brava 45-ica (6x24)
tri ključanja-122.015
710.136
710.135
FT-0592F
321.006
102,5
45
5
710.203
321.006
331.015
331.010
710.141
433.018
710.142
710.143
FT-0551F
41,5
433.018
F-1232
F-1232
55
F-1232
F-1232
433.018
710.118
433.018
FT-0510F
710.091
Z40-667

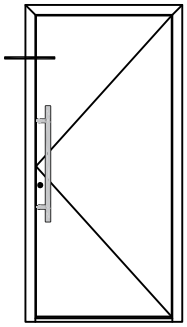

-vanjska završna obrada -external finishing

-vanjska toplinska izolacija -external thermal insulation

-paropropusna i vodonepropusna folija (hidroizolacija) -vapor permeable and liquid impermeable foil (hydro-insulation)

-toplinska izolacija -thermal insulation

-paro- i vodonepropusna folija (parna brana) -vapor- and liquid impermeable foil (vapor barrier)

-unutarnja završna obrada -internal finishing

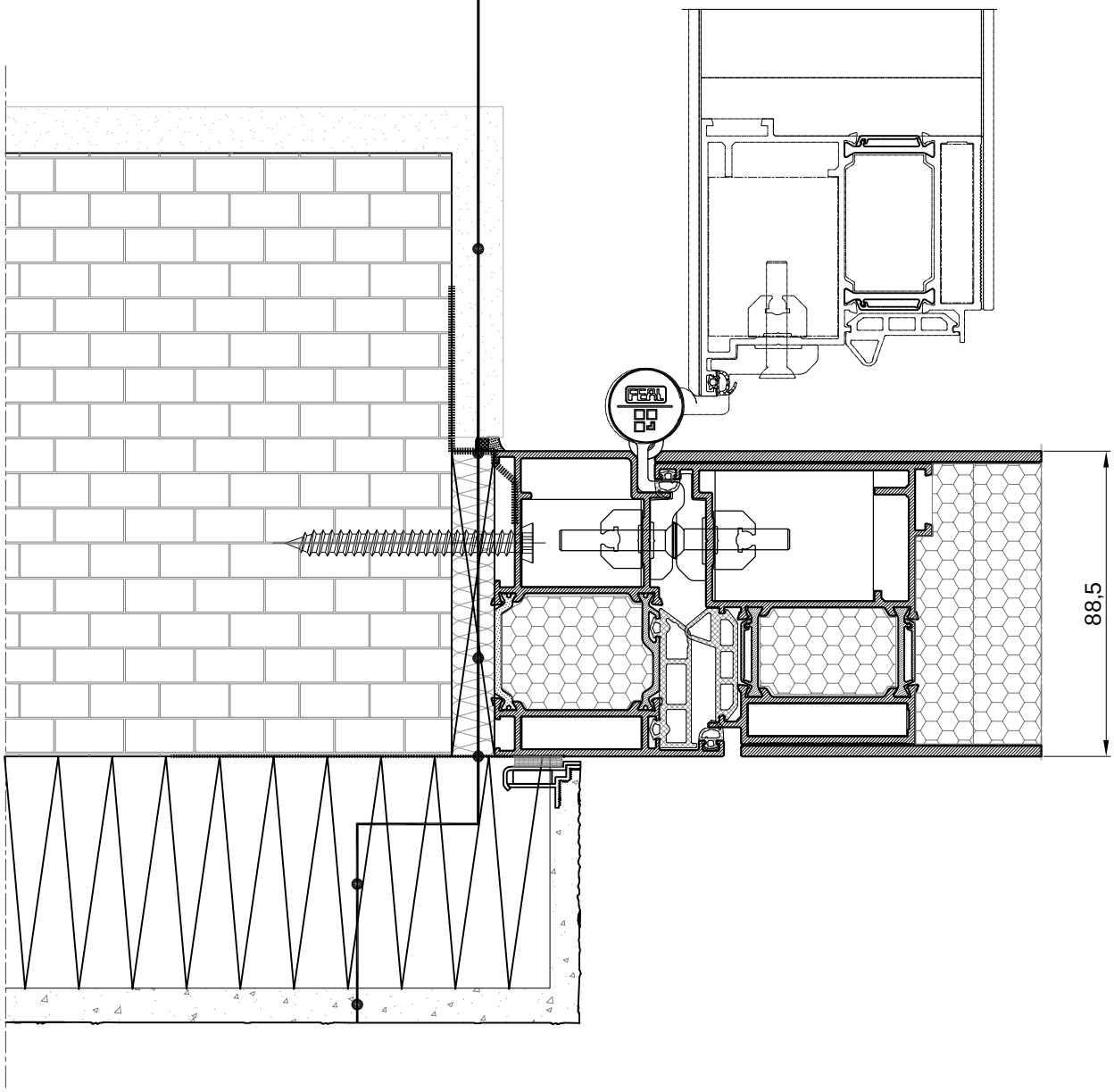

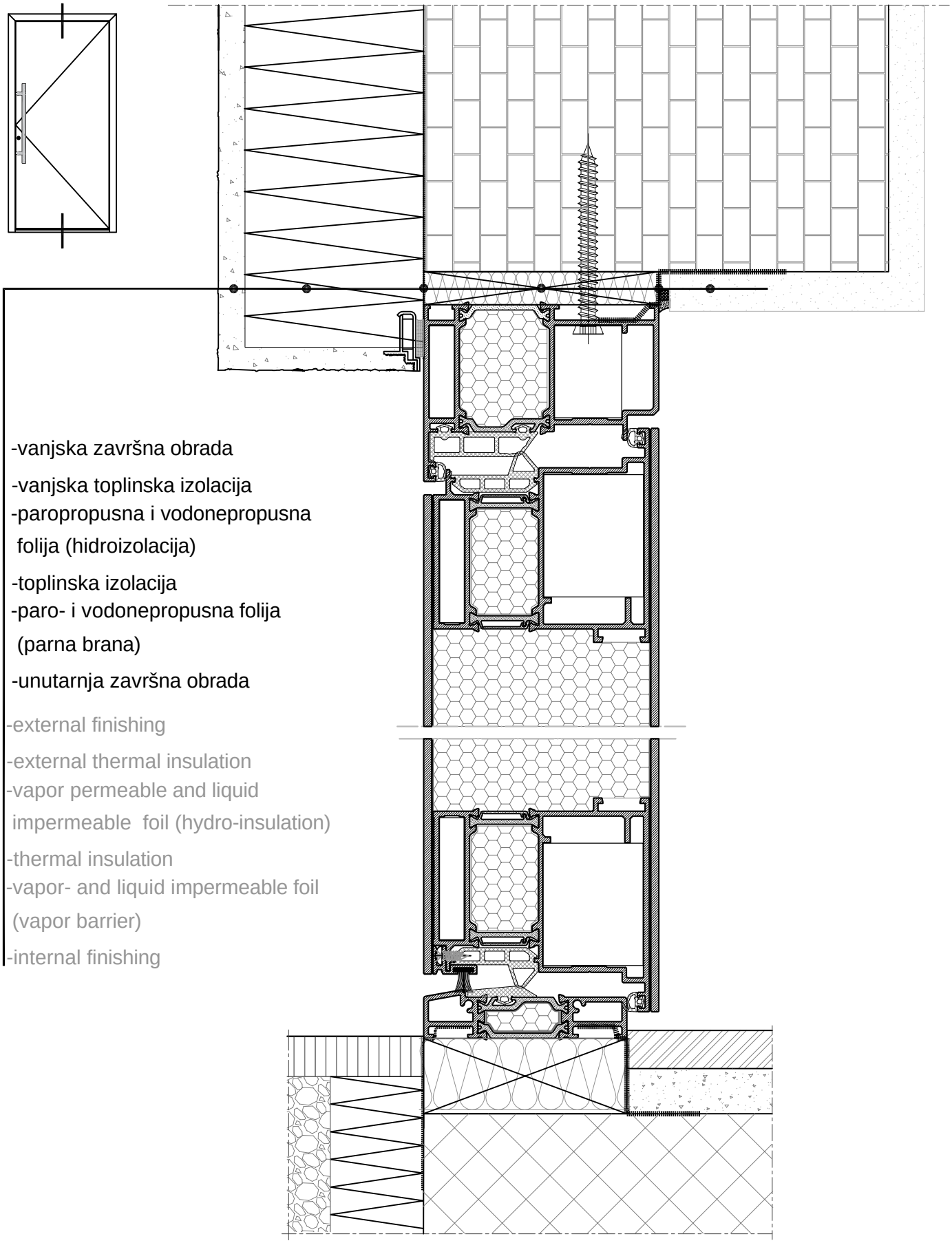
-vanjska završna obrada
-vanjska toplinska izolacija
-paropropusna i vodonepropusna folija (hidroizolacija)
-toplinska izolacija
-paro- i vodonepropusna folija (parna brana)
-unutarnja završna obrada
-external finishing
-external thermal insulation
-vapor permeable and liquid impermeable foil (hydro-insulation)
-thermal insulation
-vapor- and liquid impermeable foil (vapor barrier)
-internal finishing

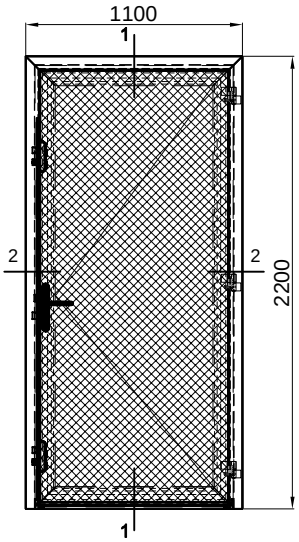

Poz.	profile / gaskets / accessories / glass	producer
1	al. profile (frame) FT-0551 F	FEAL
2	al. profile (wing) FT-0592 F	FEAL
3	al. profile (doorstep) FT-0584 F	FEAL
4	al. profile Z40-665	FEAL
5	al. profile F -1200	FEAL
6	al. profile F -1205	FEAL
7	gasket 331.010(EPDM)	Iseo Gomma
8	gasket 331.015 (EPDM)	Iseo Gomma
9	gasket 331.013 (EPDM)	Iseo Gomma
10	gasket 344.004 (TPE)	AM-2000
11	gasket 321.001(EPDM)	Iseo Gomma
12	gasket 311.003 (EPDM)	Iseo Gomma
13	al. angled connector 710.143	FEAL
14	al. angled connector 710.141	FEAL
15	al. angled connector 710.136	FEAL
16	al. connector 141.001	FEAL
17	support plates for door locks	GU-Bks
18	door locks - SECURY AUTOM.4 45/92/8/U24/1020	GU-Bks
19	handle door	GU-Bks
20	brush door 347.003	Schlegel
21	door panel 65 mm (3+60+2)	FEAL
22	TURBAND 4, 2-tlg.EV1, 20/65, Ankers 58 mm	Dr.Hahn
23	burglar insert 141.002	FEAL
24	receiving plate on metal sheets	FEAL

SECTION 1-1

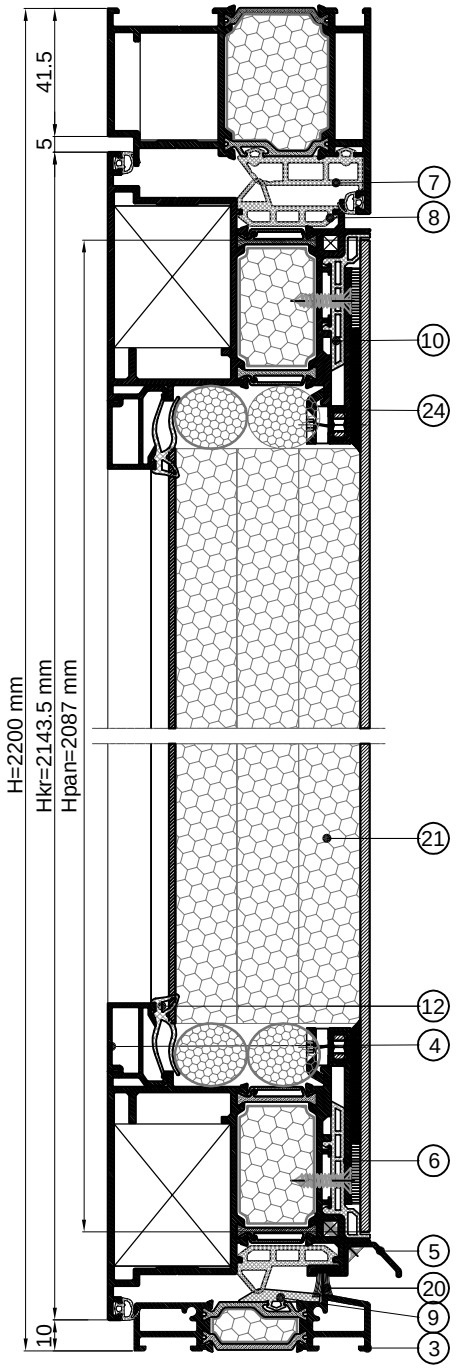

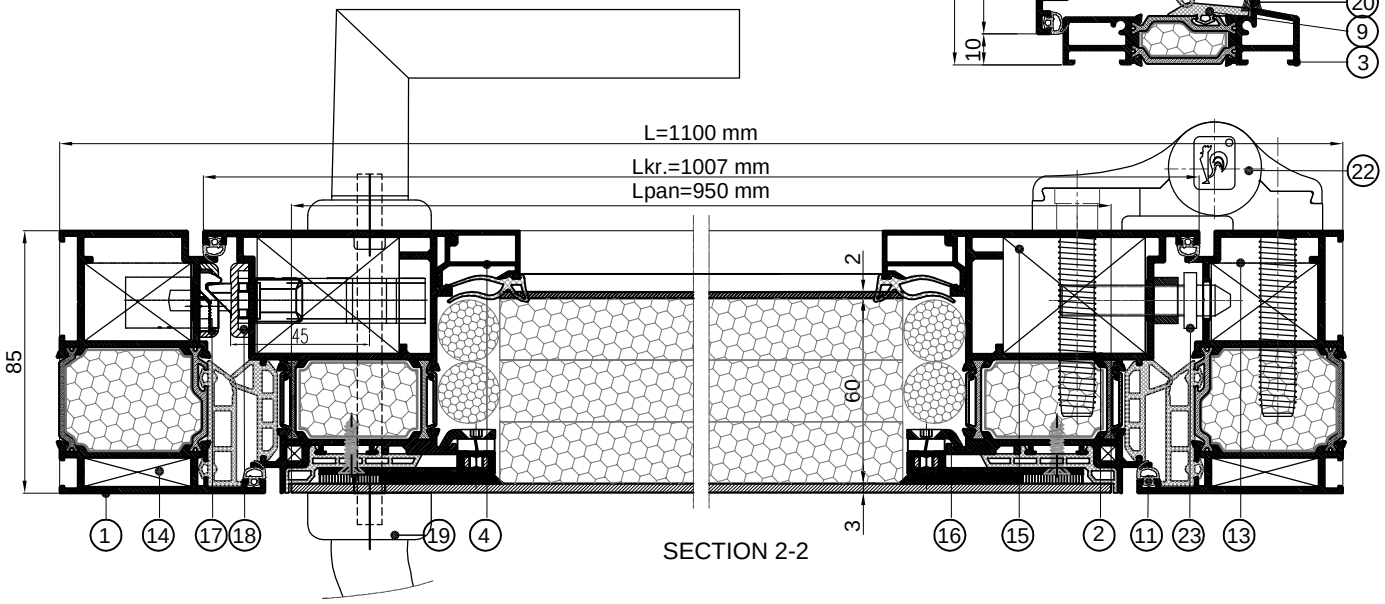

SECTION 2-2

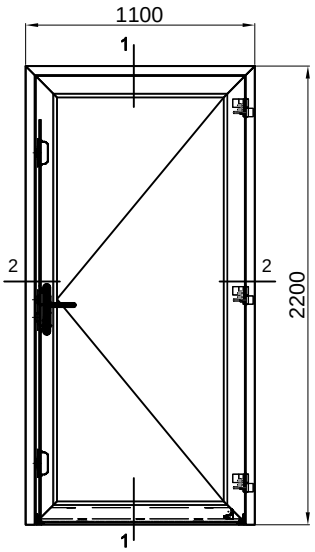

SECTION 1-1

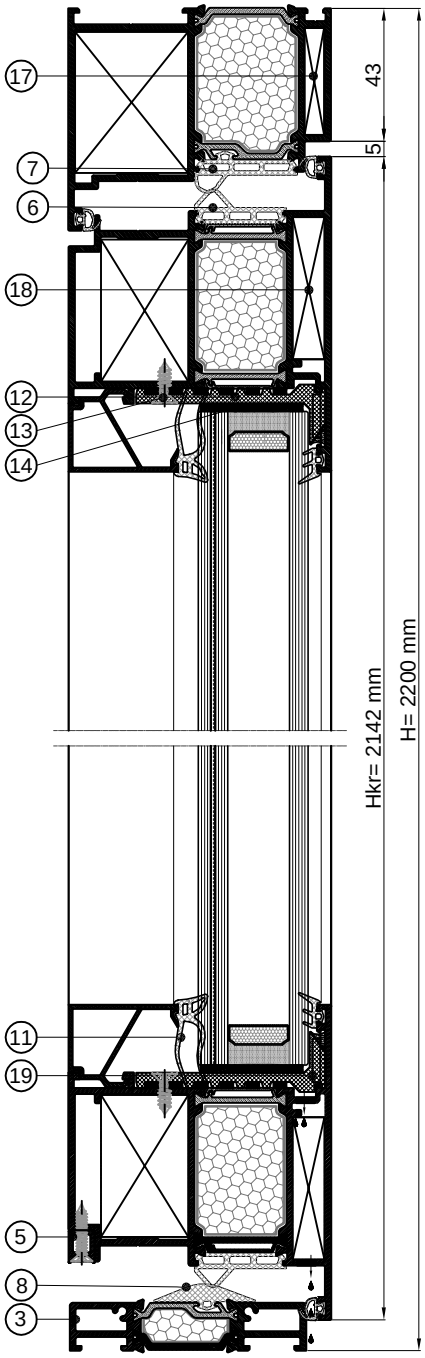

Poz.	profile / gaskets / accessories / glass	producer
1	al. profile (frame) FT-0552 F	FEAL
2	al. profile (wing) FT-0562 F	FEAL
3	al. profile (doorstep) F-0585 F	FEAL
4	al. profile Z40-669	FEAL
5	al. profile F -1188	FEAL
6	gasket 331.016 (EPDM)	Iseo Gomma
7	gasket 331.014 (EPDM)	Iseo Gomma
8	gasket 331.012 (EPDM)	Iseo Gomma
9	gasket 321.003 (EPDM)	Iseo Gomma
10	gasket 321.002 (EPDM)	Iseo Gomma
11	gasket 311.005 (EPDM)	Iseo Gomma
12	support glass 374.054 (PVC)	AM-2000
13	Screw 3.9 x 16 DIN 7982	Würth
14	silicone DC 895	Dow corning
15	al. angled connector 710.131	FEAL
16	al. angled connector 710.133	FEAL
17	al. angled connector 710.140	FEAL
18	al. angled connector 710.134	FEAL
19	al. angled connector 731.010	Monticelli
20	support plates for door locks	GU-Bks
21	door locks - MR2	GU-Bks
22	handle door	GU-Bks
23	glass 35,5 mm (6+20+44.4)	Kristal
24	two-part hingle max-3d	Alu-b
25	burglar inset	FEAL

SECTION 2-2

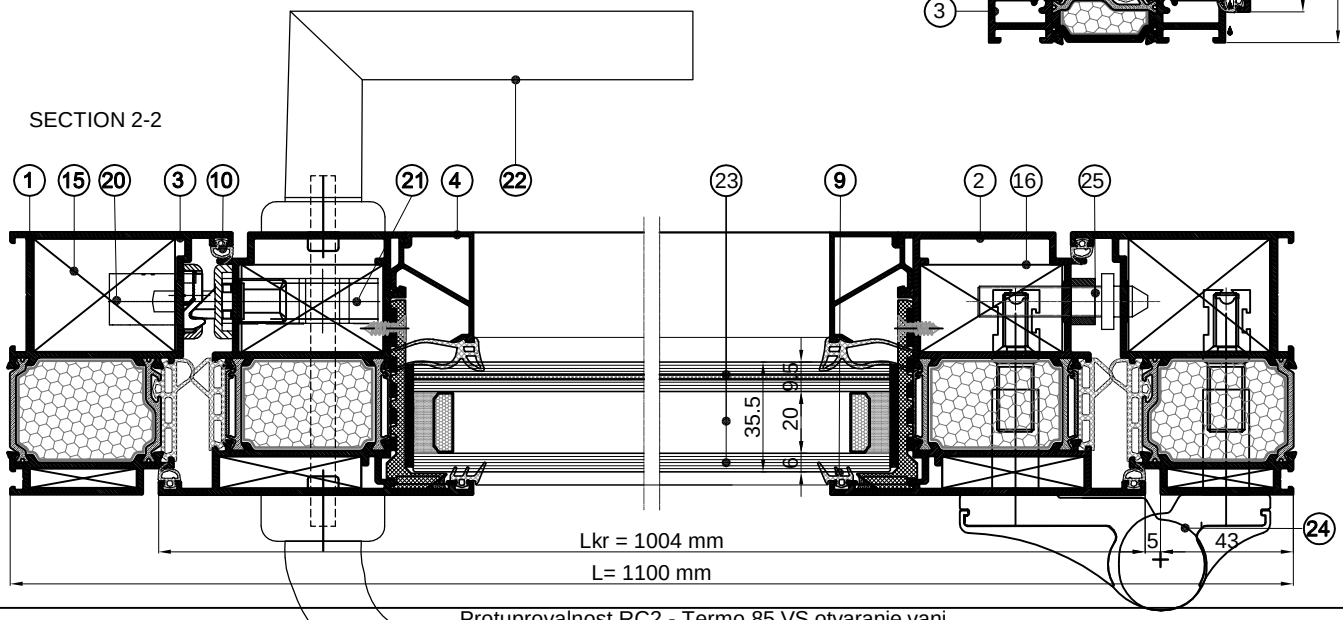

FEAL

TERMO **85 VS** I **VP**

Knjiga A / *Book A*

Kolovoz 2021. / August 2021

FEAL d.o.o.
Trnska cesta 146
88220 Široki Brijeg
Bosna i Hercegovina
Tel. +387 39 704-269; 705-807; 705-636
Fax. +387 39 704-358
info@feal.ba
www.feal.ba